Repair Manual

Golf Variant 2007 ➤
Golf Variant 2010 ➤
Jetta 2005 ➤
Jetta 2011 ➤

6-Speed Manual Transmission 02Q									
Engine ID	BPY	CCT A	CBF A	CBE A	CJAA	CPLA	CPP A		

Edition 05.2013

Protected by copyright. Copying for private or commercial purposes, in part or in whole, is not permitted unless authorised by Volkswagen AG. Volkswagen AG does not guarantee or accept any liability with respect to the correctness of information in this document. Copyright by Volkswagen AG.

List of Workshop Manual Repair Groups

Repair Group

00 - Technical Data
30 - Clutch
34 - Operation and Housing
35 - Gears, Shafts
39 - Final Drive and Differential

Copying for private or commercial purposes, in part or in whole, is not permitted unless authorised by Volkswagen AG. Volkswagen AG does not guarantee or accept any liability with respect to the correctness of information in this document. Copyright by Volkswagen AG.

Technical information should always be available to the foremen and mechanics, because their careful and constant adherence to the instructions is essential to ensure vehicle road-worthiness and safety. In addition, the normal basic safety precautions for working on motor vehicles must, as a matter of course, be observed.

All rights reserved.
No reproduction without prior agreement from publisher.

Copyright © 2015 Volkswagen AG, Wolfsburg

D3E8001FD66

Contents

00 - Technical Data . . . 1

1 **Transmission Identification, FWD** . . . 1
1.1 Location on Transmission . . . 1
1.2 Codes Letters, Transmission Allocation and Capacities, FWD . . . 2
2 **Transmission Identification, AWD** . . . 7
2.1 Location on Transmission . . . 7
2.2 Code Letters, Transmission Allocation and Capacities, AWD . . . 7
3 **Overview - Transmission, FWD** . . . 10
4 **Overview - Transmission, AWD** . . . 12
5 **Transmission Ratio “i”, Calculating** . . . 14
6 **Notes on Performance Test, AWD** . . . 15
7 **General Repair Information** . . . 16
7.1 Safety Precautions, Vehicles with Start/Stop System . . . 16
7.2 Contact Corrosion . . . 16
7.3 Special Tools . . . 16
7.4 Components . . . 16

30 - Clutch . . . 21

1 **Clutch Mechanism, Servicing** . . . 21
1.1 Overview . . . 21
1.2 Overview - Pedal Cluster . . . 23
1.3 Over-Center Spring, Removing and Installing . . . 24
1.4 Clutch Pedal, Removing and Installing . . . 29
1.5 Mounting Bracket, Removing and Installing . . . 35
1.6 Clutch Master Cylinder, Removing and Installing . . . 40
1.7 Clutch Position Sensor G476 , Removing and Installing . . . 41
1.8 Overview - Hydraulics . . . 43
1.9 Overview - Hydraulics, RHD . . . 46
1.10 Clutch Mechanism, Bleeding . . . 48
2 **Clutch Release Mechanism, Servicing** . . . 50
2.1 Line Assembly and Bleeder on the Clutch Slave Cylinder, Removing and Installing . . . 52
2.2 Clutch Slave Cylinder with Release Bearing, Removing and Installing . . . 52
2.3 Hose/Line Assembly or Pipe, Removing and Installing . . . 53
2.4 Input Shaft Seal, Replacing . . . 55
3 **Clutch, Servicing, Diesel** . . . 57
3.1 Determining Clutch Manufacturer . . . 57
3.2 “Sachs” Clutch, Removing and Installing . . . 58
3.3 Clutch, Servicing, “Sachs” . . . 61
3.4 “LuK” Clutch, Removing and Installing . . . 62
3.5 Clutch, Servicing, “LuK” . . . 65
4 **Clutch, Servicing, Gasoline** . . . 67
4.1 Clutch, Servicing . . . 67
4.2 Clutch, Removing and Installing . . . 68
5 **Special Tools** . . . 72

34 - Operation and Housing . . . 76

1 **Shift Mechanism, Servicing** . . . 76
1.1 Shift Mechanism Installation Position . . . 76
1.2 Overview - Selector Mechanism . . . 78
1.3 Overview - Gearshift Knob and Cover . . . 79
1.4 Boot with Shifter Knob and Noise Insulation, Removing and Installing . . . 79

Protected by copyright. Copying for private or commercial purposes, in part or in whole, is not permitted unless authorised by Volkswagen AG. Volkswagen AG does not guarantee or accept any liability with respect to the correctness of information in this document. Copyright by Volkswagen AG.

1.5 Overview - Gearshift Lever and Gearshift Housing, through 10/2006 81
1.6 Overview - Gearshift Lever and Gearshift Housing, from 11/2006 83
1.7 Overview - Operating Cables 85
1.8 Plastic Relay Lever 89
1.9 Selector Mechanism, Removing and Installing 92
1.10 Gearshift Cable and Selector Cable, Removing and Installing 96
1.11 Selector Mechanism, Adjusting 97
1.12 Selector Mechanism, Disassembling and Assembling, from 11/2006 100

2 Transmission, Removing and Installing, Jetta from MY 2005 , Golf Wagon from MY 2007 and Golf Wagon from MY 2010, Vehicles with Diesel Engine and FWD 106
2.1 Transmission, Removing and Installing 106
2.2 Tightening Specifications 124

3 Transmission, Removing and Installing, Jetta from MY 2005 , Golf Wagon from MY 2007 and Golf Wagon from MY 2010, Vehicles with Gasoline Engine and FWD 126
3.1 Transmission, Removing and Installing 126
3.2 Tightening Specifications 143

4 Transmission, Removing and Installing, Jetta from MY 11, Diesel and Gasoline 145
4.1 Transmission, Removing and Installing 145
4.2 Tightening Specifications 164

5 Transmission, Removing and Installing, Jetta from MY 2005 , Golf Wagon from MY 2007 and Golf Wagon from MY 2010, Vehicles with AWD 166
5.1 Transmission, TDI, Removing and Installing 166

6 Transmission, Transporting 189
6.1 FWD, Transporting Transmission 189
6.2 AWD, Transporting Transmission 189

7 Transmission, Securing in Engine/Transmission Holder 191

8 Transmission Fluid, Checking 192

9 Bevel Box, Removing and Installing 193
9.1 Bevel Box, Vehicles with TDI Engine without Particulate Filter, Removing and Installing . . 193
9.2 Bevel Box, Removing and Installing, Vehicles with a Turbo Diesel Engine with a Particulate Filter, through approximately 10/2009 201
9.3 Bevel Box, Removing and Installing, Vehicles with a Turbo Diesel Engine with a Particulate Filter, through Approximately 11/2009 211

10 Axle Oil in Bevel Box, Checking or Adding 218
10.1 Gear Oil in Bevel Box, Checking 218
10.2 Gear Oil in Bevel Box, Filling 219

11 Transmission, Disassembling and Assembling 222
11.1 Overview - Transmission, FWD 222
11.2 Overview - Transmission, AWD 224
11.3 Overview - FWD 225
11.4 Overview - AWD 226
11.5 Transmission Housing and Gearshift Mechanism, Removing and Installing 228
11.6 Overview - Input Shaft, Output Shafts, Differentials and Shift Rods, Removing and Installing, for FWD Vehicles 231
11.7 Overview - Input Shaft, Output Shaft, Differential, Bevel Box and Shift Rods, Removing and Installing, for AWD Vehicles 234
11.8 Assembly Sequence, Transmission »without« a Securing Ring A for the Metal Cover for the Input Shaft 235
11.9 Assembly Sequence: I = Transmission »with« a Securing Ring A for the Metal Cover for the Input Shaft; II = Transmission with Plastic Cover for Input Shaft 247

12 Transmission Housing, Servicing 261

13 Clutch Housing, Servicing 269

14 Shift Unit, Servicing 273
14.1 Selector Shaft Seal, Replacing 274

15 Shift Forks, Servicing 277

16 Special Tools . . . 279
17 Special Tools . . . 296

35 - Gears, Shafts . . . 310
1 Input Shaft . . . 310
1.1 Overview - Input Shaft . . . 310
1.2 Input Shaft, Disassembling and Assembling . . . 311
2 1st through 4th Gear Output Shaft . . . 317
2.1 Overview - Output Shaft, 1st to 4th Gears . . . 317
2.2 Output Shaft, 1st to 4th Gears, Disassembling and Assembling . . . 321
2.3 Output Shaft 1st through 4th Gear, Adjusting . . . 340
3 5th, 6th and Reverse Gear Output Shaft . . . 344
3.1 Overview - Input Shaft, 5th/6th and Reverse Gears . . . 344
3.2 Output Shaft, 5th, 6th and Reverse Gears, Disassembling and Assembling . . . 348
3.3 Output Shaft, 5th, 6th and Reverse Gears, Adjusting . . . 353
4 Special Tools . . . 357

39 - Final Drive and Differential . . . 369
1 Flange Shaft Seals, Manual Transmission Installed, Replacing for FWD Vehicles . . . 369
1.1 Left Flange Shaft Seal, Replacing . . . 369
1.2 Right Flange Shaft Seal, Replacing . . . 370
2 Flange Shaft Seals and Bevel Box, Replacing for AWD Vehicles (Manual Transmission already Installed) . . . 373
2.1 Left Flange Shaft Seal, Replacing . . . 373
2.2 Right Flange Shaft Seal, Replacing . . . 373
2.3 Bevel Box Seal, Replacing, with Manual Transmission Installed . . . 375
3 Overview - Seals, Flange Shaft Bearing and Output Flange Bearing inside the Bevel Box . . . 377
3.1 Bevel Box, Removing and Installing (Manual Transmission Removed) . . . 379
3.2 Gasket on Bevel Box between Manual Transmission and Bevel Box, Replacing . . . 380
3.3 Bevel Box Output Flange Seal, Replacing (Bevel Box Removed) . . . 381
3.4 Output Flange, Replacing and Selecting New Shim for Output Flange, Bevel Box Removed . . . 387
3.5 Needle Bearing (polygon bearing) on Right Flange Shaft and Seal on Right Flange Shaft, Replacing . . . 387
4 Overview - Adjustment . . . 393
5 Differential . . . 394
5.1 FWD Differential, Disassembling and Assembling . . . 394
5.2 Differential, AWD, Disassembling and Assembling . . . 399
5.3 Differential, Adjusting . . . 405
6 Special Tools . . . 408
7 Revision History . . . 421

Protected by copyright. Copying for private or commercial purposes, in part or in whole, is not permitted unless authorised by Volkswagen AG. Volkswagen AG does not guarantee or accept any liability with respect to the correctness of information in this document. Copyright by Volkswagen AG.

Protected by copyright. Copying for private or commercial purposes, in part or in whole, is not permitted unless authorised by Volkswagen AG. Volkswagen AG does not guarantee or accept any liability with respect to the correctness of information in this document. Copyright by Volkswagen AG.

00 – Technical Data

1 Transmission Identification, FWD

(Edition 05.2013)

⇒ "1.1 Location on Transmission", page 1

⇒ "1.2 Codes Letters, Transmission Allocation and Capacities, FWD", page 2

The 6-speed manual transmission 02Q is installed with a 4-cylinder engine in the Jetta from MY 2005, the Golf Wagon from MY 2007, the Golf Wagon from MY 2010 and the Jetta from MY 2011.

Allocation. Refer to
⇒ "1.2 Codes Letters, Transmission Allocation and Capacities, FWD", page 2 .

1.1 Location on Transmission

Code letters and build date -arrow 1- manual transmission 02Q -arrow 2-

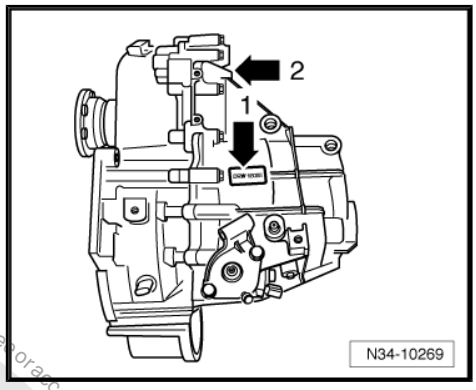

Manual Transmission 02Q -arrow 2-

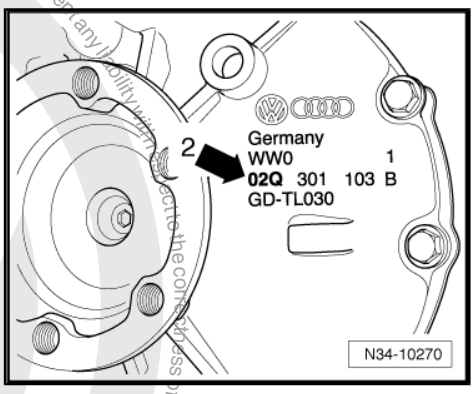

Transmission Codes and Production Date-arrow-

Example:	GRF	25	11	3
	I	I	I	I
	I	I	I	I
	Codes	Day	Month	Year (2003) of manufacture

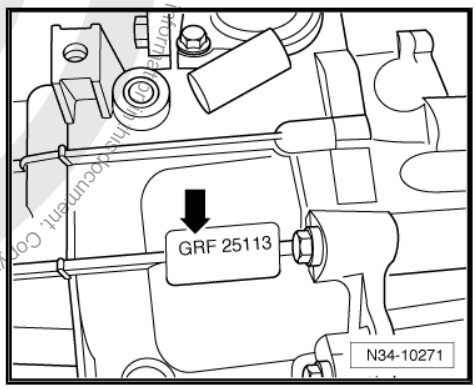

Additional data and information is provided by the factory.

Note

The transmission code is also listed on the vehicle data label.

Protected by copyright. Copying for private or commercial purposes, in part or in whole, is not permitted unless authorised by Volkswagen AG. Volkswagen AG does not guarantee or accept any liability with respect to the correctness of information in this document. Copyright by Volkswagen AG.

1.2 Codes Letters, Transmission Allocation and Capacities, FWD

Manual Transmission		6-Speed 02Q FWD		
Codes		**GRF**	**GVT**	**GXC**
Manufactured	from through	05/2005 11/2005	05/2005 11/2005	07/2006 07/2006
Allocation	Type	Jetta from MY 2005 Golf Wagon from MY 2007	Jetta from MY 2005 Golf Wagon from MY 2007	Jetta from MY 2005 Golf Wagon from MY 2007
	Engine	2.0L - 103 kW Turbo-Diesel	2.0L - 147 kW Turbo FSI	2.0L - 125 kW Turbo-Diesel
Ratio: $Z_2 : Z_1$	Final drive I [1]	69 : 20 = 3.450	71 : 18 = 3.944	71 : 18 = 3.944
	Final drive II[2]	69 : 25 = 2.760	71 : 23 = 3.087	71 : 23 = 3.087
Manual Transmission Capacity		Refer to ⇒ Fluid Capacity Tables; Rep. Gr. 03	Refer to ⇒ Fluid Capacity Tables; Rep. Gr. 03	Refer to ⇒ Fluid Capacity Tables; Rep. Gr. 03
Driveshaft Flange Diameter		107 mm	107 mm	107 mm

[1] Final drive for 1st to 4th gear
[2] Final drive for 5th/6th and reverse gears
- Refer to the Parts Catalog for the following information.

♦ The individual gear ratios

♦ Transmission fluid specification

♦ Clutch disc and pressure plate allocation

Manual Transmission		6-Speed 02Q FWD		
Codes		**HDV**	**HVS**	**JLU**
Manufactured	from through	05/2005	07/2006	05/2006 05/2007
Allocation	Type	Jetta from MY 2005 Golf Wagon from MY 2007	Jetta from MY 2005 Golf Wagon from MY 2007	Jetta from MY 2005 Golf Wagon from MY 2007
	Engine	2.0L - 96 kW turbo diesel 2.0L - 100 kW turbo diesel 2.0L - 103 kW turbo diesel	2.0L - 125 kW Turbo-Diesel	2.0L - 100 kW turbo diesel 2.0L - 103 kW turbo diesel
Ratio: $Z_2 : Z_1$	Final drive I [1]	69 : 20 = 3.450	70 : 19 = 3.684	72 : 17 = 4.235
	Final drive II[2]	69 : 25 = 2.760	70 : 24 = 2.917	72 : 22 = 3.273
Manual Transmission Capacity		Refer to ⇒ Fluid Capacity Tables; Rep. Gr. 03	Refer to ⇒ Fluid Capacity Tables; Rep. Gr. 03	Refer to ⇒ Fluid Capacity Tables; Rep. Gr. 03
Driveshaft Flange Diameter		107 mm	107 mm	107 mm

[1] Final drive for 1st to 4th gear
[2] Final drive for 5th/6th and reverse gears
- Refer to the Parts Catalog for the following information.

♦ The individual gear ratios

♦ Transmission fluid specification

♦ Clutch disc and pressure plate allocation

Copyright by Volkswagen AG. Volkswagen AG does not guarantee or accept any liability with respect to the correctness of information. Copying for private or commercial purposes, in part or in whole, is not permitted unless authorised by Volkswagen AG.

Manual Transmission		6-Speed 02Q FWD		
Codes		**JLW**	**JMA**	**KDN**
Manufactured	from through	05/2006 05/2007	06/2006 06/2007	05/2007 01/2008
Allocation	Type	Jetta from MY 2005 Golf Wagon from MY 2007	Jetta from MY 2005	Jetta from MY 2005 Golf Wagon from MY 2007
	Engine	2.0L - 147 kW Turbo FSI	2.0L - 125 KW Turbo diesel	2.0L - 100 kW turbo diesel 2.0L - 103 kW turbo diesel
Ratio: $Z_2 : Z_1$	Final drive I [1]	71 : 18 = 3.944	70 : 19 = 3.684	69 : 20 = 3.450
	Final drive II[2]	71 : 23 = 3.087	70 : 24 = 2.917	69 : 25 = 2.760
Manual Transmission Capacity		Refer to ⇒ Fluid Capacity Tables; Rep. Gr. 03	Refer to ⇒ Fluid Capacity Tables; Rep. Gr. 03	Refer to ⇒ Fluid Capacity Tables; Rep. Gr. 03
Driveshaft Flange Diameter		107 mm	107 mm	107 mm

[1] Final drive for 1st to 4th gear
[2] Final drive for 5th/6th and reverse gears
- Refer to the Parts Catalog for the following information.

♦ The individual gear ratios

♦ Transmission fluid specification

♦ Clutch disc and pressure plate allocation

Manual Transmission		6-Speed 02Q FWD		
Codes		**KDQ**	**KDS**	**KNS**
Manufactured	from through	07/2007 03/2008	07/2007 06/2008	11/2007 10/2008
Allocation	Type	Jetta from MY 2005 Golf Wagon from MY 2007	Jetta from MY 2005	Jetta from MY 2005 Golf Wagon from MY 2007 Golf Wagon from MY 10
	Engine	2.0L - 147 kW Turbo FSI	2.0L - 125 KW Turbo diesel	2.0L - 100 kW turbo diesel 2.0L - 103 kW turbo diesel
Ratio: $Z_2 : Z_1$	Final drive I [1]	71 : 18 = 3.944	70 : 19 = 3.684	69 : 20 = 3.450
	Final drive II[2]	71 : 23 = 3.087	70 : 24 = 2.917	69 : 25 = 2.760
Manual Transmission Capacity		Refer to ⇒ Fluid Capacity Tables; Rep. Gr. 03	Refer to ⇒ Fluid Capacity Tables; Rep. Gr. 03	Refer to ⇒ Fluid Capacity Tables; Rep. Gr. 03
Driveshaft Flange Diameter		107 mm	107 mm	107 mm

[1] Final drive for 1st to 4th gear
[2] Final drive for 5th/6th and reverse gears
- Refer to the Parts Catalog for the following information.

♦ The individual gear ratios

♦ Transmission fluid specification

♦ Clutch disc and pressure plate allocation

Volkswagen AG does not guarantee or accept any liability with respect to the correctness of information in this document. Copyright by Volkswagen AG.
Copyright by Volkswagen AG. Protected by copyright. Copying for private or commercial purposes, in part or whole, is not permitted unless authorised by Volkswagen AG.

Manual Transmission		6-Speed 02Q FWD		
Codes		**KNU**	**KNY**	**KRM**
Manufactured	from through	11/2007 02/2009	02/2008 10/2008	05/2007 07/2010
Allocation	Type	Jetta from MY 2005 Golf Wagon from MY 2007	Jetta from MY 2005	Jetta from MY 2005 Golf Wagon from MY 2007 Golf Wagon from MY 10
	Engine	2.0L - 147 KW 2.0L - 155 KW	2.0L - 125 KW Turbo diesel	2.0L - 100 kW turbo diesel 2.0L - 103 kW turbo diesel
Ratio: $Z_2 : Z_1$	Final drive I [1)]	71 : 18 = 3.944	70 : 19 = 3.684	69 : 20 = 3.450
	Final drive II[2)]	71 : 23 = 3.087	70 : 24 = 2.917	69 : 25 = 2.760
Manual Transmission Capacity		Refer to ⇒ Fluid Capacity Tables; Rep. Gr. 03	Refer to ⇒ Fluid Capacity Tables; Rep. Gr. 03	Refer to ⇒ Fluid Capacity Tables; Rep. Gr. 03
Driveshaft Flange Diameter		107 mm	107 mm	107 mm

[1)] Final drive for 1st to 4th gear
[2)] Final drive for 5th/6th and reverse gears

- Refer to the Parts Catalog for the following information.

◆ The individual gear ratios

◆ Transmission fluid specification

◆ Clutch disc and pressure plate allocation

Manual Transmission		6-Speed 02Q FWD		
Codes		**KXX**	**KXZ**	**KZS**
Manufactured	from through	05/2009	05/2009	05/2009
Allocation	Type	Jetta from MY 2005 Golf Wagon from MY 2007	Jetta from MY 2005 Golf Wagon from MY 2007	Jetta from MY 05 Golf Wagon from MY 07 Jetta from MY 11
	Engine	2.0L - 100 kW turbo diesel 2.0L - 103 kW turbo diesel	2.0L - 100 KW turbo diesel 2.0L - 103 KW turbo diesel 2.0L - 125 KW turbo diesel	2.0L - 155 KW 2.0L - 147 KW
Ratio: $Z_2 : Z_1$	Final drive I [1)]	69 : 20 = 3.450	70 : 19 = 3.684	70 : 19 = 3.684
	Final drive II[2)]	69 : 25 = 2.760	70 : 24 = 2.917	70 : 24 = 2.917
Manual Transmission Capacity		Refer to ⇒ Fluid Capacity Tables; Rep. Gr. 03	Refer to ⇒ Fluid Capacity Tables; Rep. Gr. 03	Refer to ⇒ Fluid Capacity Tables; Rep. Gr. 03
Driveshaft Flange Diameter		107 mm	107 mm	107 mm

Copyright by Volkswagen AG, Wolfsburg. Reproduction or publication not permitted without authorisation. Copyright by Volkswagen AG. Copying for private or commercial purposes, in part or in whole, is not permitted unless authorised by Volkswagen AG. Volkswagen AG does not guarantee or accept any liability with respect to the correctness of information in this document.

Manual Transmission	6-Speed 02Q FWD		
Codes	**KXX**	**KXZ**	**KZS**

1) Final drive for 1st to 4th gear
2) Final drive for 5th/6th and reverse gears
- Refer to the Parts Catalog for the following information.

♦ The individual gear ratios

♦ Transmission fluid specification

♦ Clutch disc and pressure plate allocation

Manual Transmission		6-Speed 02Q FWD		
Codes		**LHD**	**MDL**	**NFN**
Manufactured	from through	10/2008	11/2009	05/2009
Allocation	Type	Jetta from MY 05 Golf Wagon from MY 07 Golf Wagon from MY 10 Jetta from MY 11	Jetta from MY 2011	Jetta from MY 2005
	Engine	2.0L - 100 kW turbo diesel 2.0L - 103 kW turbo diesel	2.0L - 147 KW	2.0L - 125 KW Turbo diesel
Ratio: $Z_2 : Z_1$	Final drive I 1)	69 : 20 = 3.450	70 : 19 = 3.684	70 : 19 = 3.684
	Final drive II2)	69 : 25 = 2.760	70 : 24 = 2.917	70 : 24 = 2.917
Manual Transmission Capacity		Refer to ⇒ Fluid Capacity Tables; Rep. Gr. 03	Refer to ⇒ Fluid Capacity Tables; Rep. Gr. 03	Refer to ⇒ Fluid Capacity Tables; Rep. Gr. 03
Driveshaft Flange Diameter		107 mm	107 mm	107 mm

1) Final drive for 1st to 4th gear
2) Final drive for 5th/6th and reverse gears
- Refer to the Parts Catalog for the following information.

♦ The individual gear ratios

♦ Transmission fluid specification

♦ Clutch disc and pressure plate allocation

Manual Transmission		6-Speed 02Q FWD		
Codes		**NFP**	**PDA**	
Manufactured	from through	05/2010	12/2012	
Allocation	Type	Golf Wagon from MY 2010	Jetta from MY 2011	
	Engine	2.0L - 103 kW Turbo-Diesel	2.0L - 155 KW	
Ratio: $Z_2 : Z_1$	Final drive I 1)	69 : 20 = 3.450	70 : 19 = 3.684	
	Final drive II2)	69 : 25 = 2.760	70 : 24 = 2.917	
Manual Transmission Capacity		Refer to ⇒ Fluid Capacity Tables; Rep. Gr. 03	Refer to ⇒ Fluid Capacity Tables; Rep. Gr. 03	

Protected by copyright. Copying for private or commercial purposes, in part or in whole, is not permitted unless authorised by Volkswagen AG. Volkswagen AG does not guarantee or accept any liability with respect to the correctness of information in this document. Copyright by Volkswagen AG.

Manual Transmission	6-Speed 02Q FWD		
Codes	**NFP**	**PDA**	
Driveshaft Flange Diameter	107 mm	107 mm	

1) Final drive for 1st to 4th gear
2) Final drive for 5th/6th and reverse gears

- Refer to the Parts Catalog for the following information.

◆ The individual gear ratios

◆ Transmission fluid specification

◆ Clutch disc and pressure plate allocation

Protected by copyright. Copying for private or commercial purposes, in part or in whole, is not permitted unless authorised by Volkswagen AG. Volkswagen AG does not guarantee or accept any liability with respect to the correctness of information in this document. Copyright by Volkswagen AG.

2 Transmission Identification, AWD

⇒ "2.1 Location on Transmission", page 7

⇒ "2.2 Code Letters, Transmission Allocation and Capacities, AWD", page 7

The 6 speed manual transmission 02Q AWD is installed along with the 4 cylinder turbo diesel engine in the Jetta from MY 2005 , the Golf Wagon from MY 2007, and the Golf Wagon from MY 2010.

2.1 Location on Transmission

Code letters and build date -arrow 1- manual transmission 02Q, AWD-arrow 2-

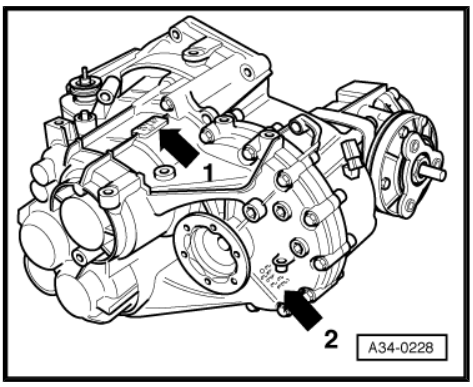

Manual Transmission 02Q AWD -arrow 2-

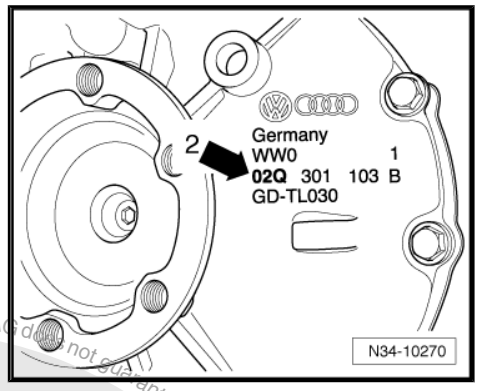

Engine Code and Build Date -arrow-

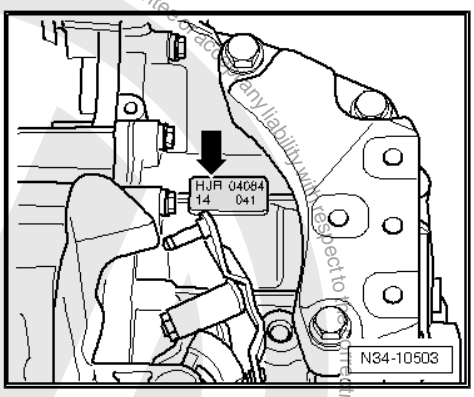

Example:	HJR	04	08	4
	I	I	I	I
	I	I	I	I
	Codes	Day	Month	Year (2004) of manufacture

Additional data and information is provided by the factory.

Note

The transmission code is also listed in the vehicle data plates.

2.2 Code Letters, Transmission Allocation and Capacities, AWD

Manual Transmission		6-Speed 02Q AWD		
Codes		**FWZ**	**JLS**	**JYS**
Manufactured	from through	08/2004 07/2007	03/2006 05/2007	05/2007 11/2007

Protected by copyright. Copyright by Volkswagen AG. Copyright by Volkswagen AG. Volkswagen AG does not guarantee the accuracy, completeness of information, nor any liability with respect to its use. Any other use, in part or whole, is not permitted unless authorised by Volkswagen AG. Volkswagen AG does not guarantee the accuracy, completeness of information, nor any liability with respect to its use. Any other use, in part or whole, is not permitted unless authorised by Volkswagen AG.

Manual Transmission		6-Speed 02Q AWD		
Codes		**FWZ**	**JLS**	**JYS**
Allocation	Type	Jetta from MY 2005 Golf Wagon from MY 2007	Golf Wagon from MY 07	Golf Wagon from MY 07
	Engine	1.9L - 77 KW Turbo diesel	1.9L - 77 KW Turbo diesel	1.9L - 77 KW Turbo diesel
Ratio: $Z_2 : Z_1$	Final drive I [1)]	72 : 17 = 4.235	72 : 17 = 4.235	72 : 17 = 4.235
	Final drive II[2)]	72 : 22 = 3.273	72 : 22 = 3.273	72 : 22 = 3.273
Manual Transmission Capacity		Refer to ⇒ Fluid Capacity Tables; Rep. Gr. 03		
Bevel box capacity		Refer to ⇒ Fluid Capacity Tables; Rep. Gr. 03		
Driveshaft Flange Diameter		107 mm		

[1)] Final drive for 1st to 4th gear
[2)] Final drive for 5th/6th and reverse gears
- Refer to the Parts Catalog for the following information.

♦ The individual gear ratios

♦ Transmission fluid specification

♦ Clutch disc and pressure plate allocation

♦ Bevel box axle oil

♦ Rear final drive allocation

Manual Transmission		6-Speed 02Q AWD		
Codes		**KDX**	**KNQ**	**KXV**
Manufactured	from through	05/2007 05/2008	02/2008	07/2009
Allocation	Type	Golf Wagon from MY 07	Golf Wagon from MY 2007 Golf Variant from MY 2010	Golf Wagon from MY 07
	Engine	1.9L - 77 KW Turbo diesel	1.9L - 77 KW Turbo diesel 1.6L - 77 KW Turbo diesel	1.9L - 77 KW Turbo diesel
Ratio: $Z_2 : Z_1$	Final drive I [1)]	72 : 17 = 4.235	72 : 17 = 4.235	72 : 17 = 4.235
	Final drive II[2)]	72 : 22 = 3.273	72 : 22 = 3.273	72 : 22 = 3.273
Manual Transmission Capacity		Refer to ⇒ Fluid Capacity Tables; Rep. Gr. 03		
Bevel box capacity		Refer to ⇒ Fluid Capacity Tables; Rep. Gr. 03		
Driveshaft Flange Diameter		107 mm		

[1)] Final drive for 1st to 4th gear
[2)] Final drive for 5th/6th and reverse gears
- Refer to the Parts Catalog for the following information.

♦ The individual gear ratios

♦ Transmission fluid specification

♦ Clutch disc and pressure plate allocation

♦ Bevel box axle oil

♦ Rear final drive allocation

Copyright by Volkswagen AG. Volkswagen AG does not guarantee or accept any liability with respect to the correctness of information in this document. Copying for private or commercial purposes, in part or in whole, is not permitted unless authorised by Volkswagen AG.

Manual Transmission		6-Speed 02Q AWD		
Codes		**LNN**		
Manufactured	from through	07/2009		
Allocation	Type	Golf Wagon from MY 2010		
	Engine	1.6L - 77 kW turbo diesel		
Ratio: $Z_2 : Z_1$	Final drive I [1]	72 : 17 = 4.235		
	Final drive II [2]	72 : 22 = 3.273		
Manual Transmission Capacity		Refer to ⇒ Fluid Capacity Tables; Rep. Gr. 03		
Bevel box capacity		Refer to ⇒ Fluid Capacity Tables; Rep. Gr. 03		
Driveshaft Flange Diameter		107 mm		

[1] Final drive for 1st to 4th gear
[2] Final drive for 5th/6th and reverse gears

- Refer to the Parts Catalog for the following information.

♦ The individual gear ratios

♦ Transmission fluid specification

♦ Clutch disc and pressure plate allocation

♦ Bevel box axle oil

♦ Rear final drive allocation

Protected by copyright. Copying for private or commercial purposes, in part or entirety, is not permitted unless authorised by Volkswagen AG. Volkswagen AG does not guarantee or accept any liability with respect to the correctness of information in this document. Copyright by Volkswagen AG.

3 Overview - Transmission, FWD

Components

-Arrows- point in the direction of travel

1 - Engine

2 - Clutch

3 - Manual Transmission

4 - Input Shaft

5 - Output Shaft for 5th, 6th and Reverse Gears (output shaft II)

6 - Output Shaft for 1st through 4th Gear (output shaft I)

7 - Differential

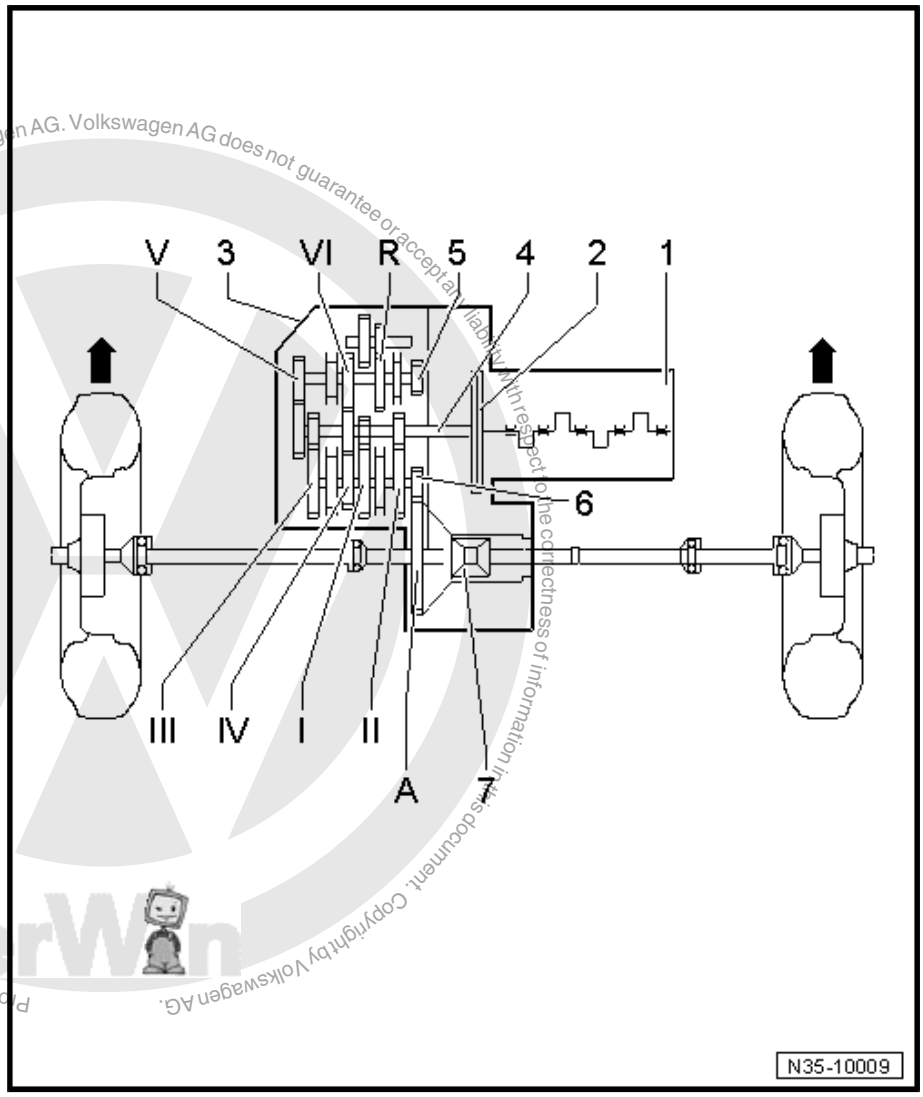

Ratio

-Arrows- point in the direction of travel

Protected by copyright. Copying for private or commercial purposes, in part or in whole, is not permitted unless authorised by Volkswagen AG. Volkswagen AG does not guarantee or accept any liability with respect to the correctness of information in this document. Copyright by Volkswagen AG.

I - 1st Gear

II - 2nd Gear

III - 3rd Gear

IV - 4th Gear

V - 5th Gear

VI - 6th Gear

R - Reverse Gear

A - Final Drive

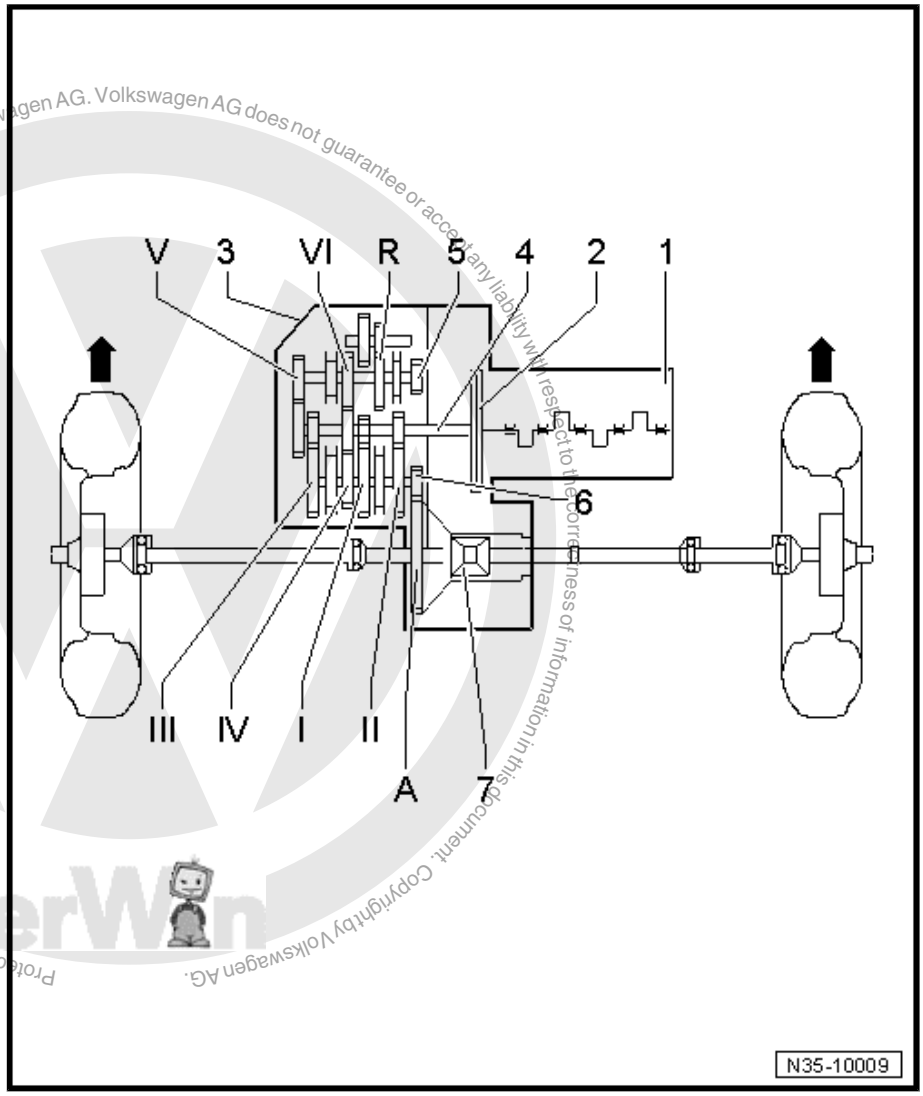

Protected by copyright. Copyright for private or commercial purposes, in part or in whole, is not permitted unless authorised by Volkswagen AG. Volkswagen AG does not guarantee or accept any liability with respect to the correctness of information in this document. Copyright by Volkswagen AG.

4 Overview - Transmission, AWD

Components

The -arrows- point in the direction of travel.

1 - Engine

2 - Clutch

3 - Manual Transmission

4 - Input Shaft

5 - Output Shaft for 5th, 6th and Reverse Gears (output shaft II)

6 - Output Shaft for 1st through 4th Gear (output shaft I)

7 - Differential

8 - Bevel Box

9 - Driveshaft

10 - Haldex Clutch

11 - Rear Final Drive

12 - Differential

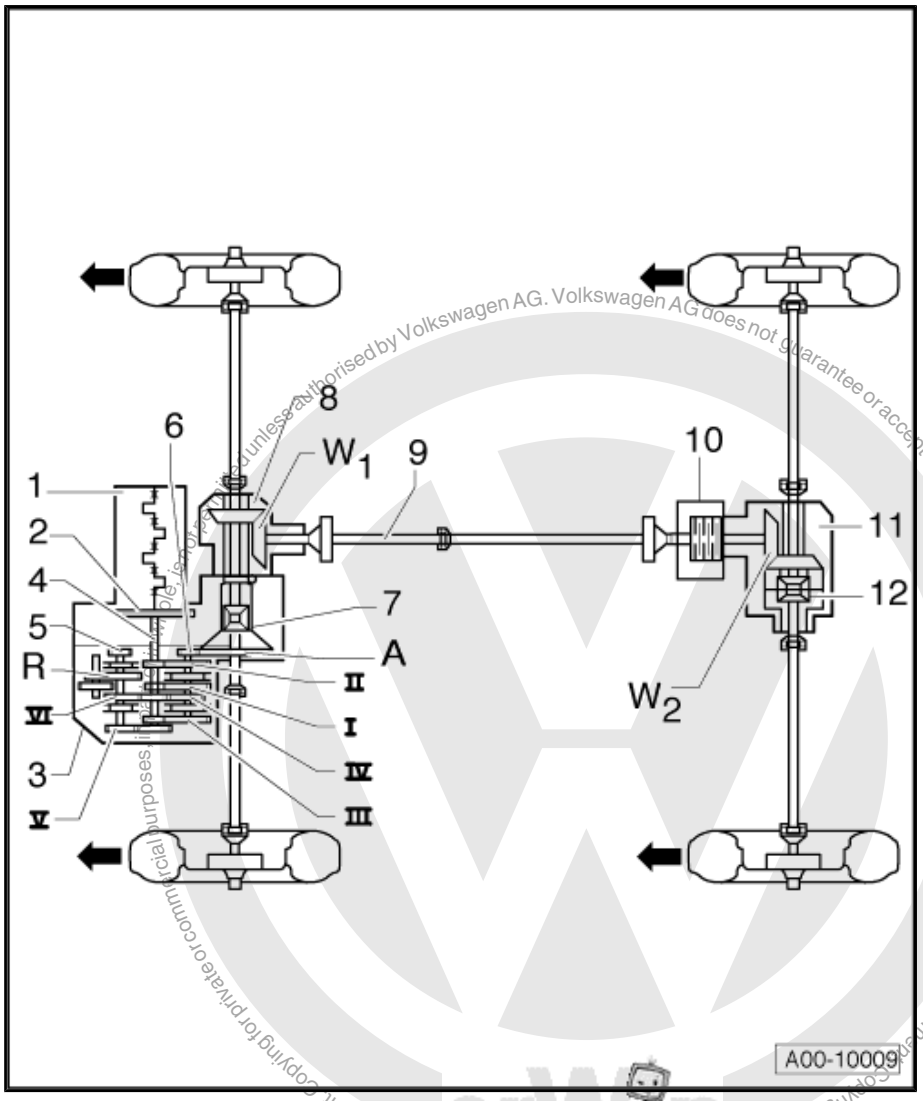

Ratio

The -arrows- point in the direction of travel.

Protected by copyright. Copying for private or commercial purposes, in part or in whole, is only permitted unless authorised by Volkswagen AG. Volkswagen AG does not guarantee or accept any liability with respect to the correctness of information in this document. Copyright by Volkswagen AG.

I - 1st Gear
II - 2nd Gear
III - 3rd Gear
IV - 4th Gear
V - 5th Gear
VI - 6th Gear
R - Reverse Gear
A - Final Drive
W1 - Front Bevel Box
W2 - Rear Bevel Box

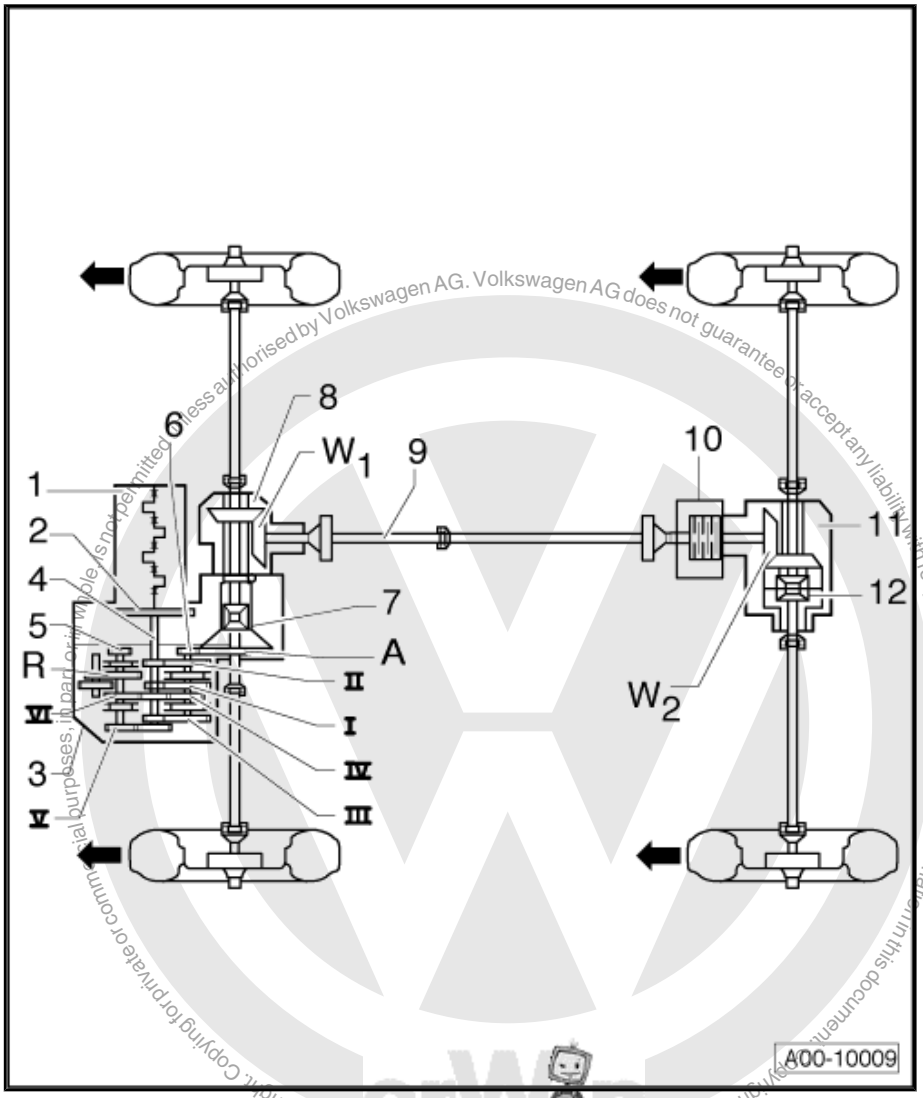

Protected by copyright. Copying for private or commercial purposes, in part or in whole, is not permitted unless authorised by Volkswagen AG. Volkswagen AG does not guarantee or accept any liability with respect to the correctness of information in this document. Copyright by Volkswagen AG.

5 Transmission Ratio “i”, Calculating

Example

	6th Gear	Final Drive
Drive gear	$ZG_1 = 43$	$ZA_1 = 25$
Driven gear	$ZG_2 = 35$	$ZA_2 = 69$

$i = ZG_2 : ZG_1$ [1)]

i_G = gear ratio = $ZG_2 : ZG_1 = 35 : 43 = 0.814$

i_A = Axle ratio = $ZG_2 : ZG_1 = 69 : 25 = 2,760$

i_{total} = total ratio = $i_G \times i_A = 0.814 \times 2.760 = 2.247$

1) Z_1 = Number of teeth on the drive gear, Z_2 = Number of teeth on the driven gear

Protected by copyright. Copying for private or commercial purposes, in part or in whole, is not permitted unless authorised by Volkswagen AG. Volkswagen AG does not guarantee or accept any liability with respect to the correctness of information in this document. Copyright by Volkswagen AG.

6 Notes on Performance Test, AWD

– Only test stands with 4 braked rollers should be used for the performance test.

Protected by copyright. Copying for private or commercial purposes, in part or in whole, is not permitted unless authorised by Volkswagen AG. Volkswagen AG does not guarantee or accept any liability with respect to the correctness of information in this document. Copyright by Volkswagen AG.

7 General Repair Information

⇒ “7.1 Safety Precautions, Vehicles with Start/Stop System”, page 16

⇒ “7.2 Contact Corrosion”, page 16

⇒ “7.3 Special Tools”, page 16

⇒ “7.4 Components”, page 16

The highest level of care and cleanliness along with tools that function properly are required to ensure a proper and successful transmission repair. Of course the general safety precautions also apply when carrying out repair work.

A list of general instructions that apply to multiple repair procedures throughout the repair manual are summarized once here under the “Components” section. Refer to ⇒ “7.4 Components”, page 16 . They apply to this repair manual.

7.1 Safety Precautions, Vehicles with Start/Stop System

WARNING

Risk of injury if the engine starts automatically in vehicles with a Start/Stop System.

- *For vehicles with an activated Start/Stop System (recognizable from a notification in the instrument cluster), the engine can be started automatically if needed.*
- *Make sure the Start/Stop system is deactivated when working on the vehicle (turn off ignition and turn the ignition back on if needed).*

7.2 Contact Corrosion

- The transmission housing and clutch housing consist of a magnesium alloy.
- Bolts and other components, which come into direct contact with the transmission, have a surface coating adapted for this.
- Contact corrosion occurs when incorrect components (bolts, nuts, washers, etc.) are used. The transmission housing and clutch housing are damaged.
- Only install components provided in the Parts Catalog.

7.3 Special Tools

Refer to Workshop Equipment and Special Tools for a complete list of special tools used in the repair manual.

7.4 Components

Transmission

- Make sure that the alignment bushings between the engine and transmission are positioned correctly when installing the manual transmission.
- Clean the contact surfaces when installing brackets and waxed components. Contact surfaces must be free of wax and grease.

Protected by copyright. Copying for private or commercial purposes, in part or in whole, is not permitted unless authorised by Volkswagen AG. Volkswagen AG does not guarantee or accept any liability with respect to the correctness of information in this document. Copyright by Volkswagen AG.

- Allocate the bolts and other components. Refer to the Parts Catalog.

FWD

- Check the transmission fluid level after installation. Refer to ⇒ “8 Transmission Fluid, Checking”, page 192 .
- For capacities, refer to ⇒ “1.2 Codes Letters, Transmission Allocation and Capacities, FWD”, page 2 . For specification. Refer to the Parts Catalog.

AWD

- After installing the transmission and/or bevel box, check the transmission fluid level in the manual transmission and the gear oil level in the bevel box (Manual Transmission. Refer to ⇒ “8 Transmission Fluid, Checking”, page 192), (Bevel Box. Refer to ⇒ “10 Axle Oil in Bevel Box, Checking or Adding”, page 218).
- For capacities. Refer to ⇒ “2.2 Code Letters, Transmission Allocation and Capacities, AWD”, page 7 . For specification. Refer to the Parts Catalog.

O-Rings, Gaskets, Seals and Sealant

- Always thoroughly clean the separating surfaces on the housing before applying the sealant.
- Apply the Sealant - AMV 188 200 03- evenly and not too thick.
- Replace the O-rings, seals and gaskets.
- Flange shaft, input shaft and selector shaft seals are illustrated as shaft seals.
- Once a shaft seal or gasket has been removed, check the contact surface on the housing or shaft for burrs and damage caused by the removal. Repair as necessary.
- Before installing the shaft seals, lightly oil the outer circumference and fill the space between the sealing lips -arrow- halfway with Grease - G 052 128 A1- .

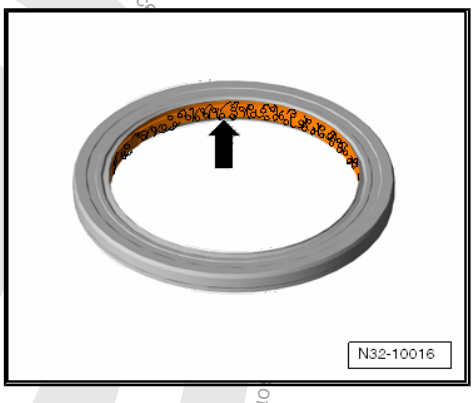

- The open side on the shaft seals faces the fluid to be sealed off.
- Press in new shaft seal, so that the sealing lip does not run on the same point as the sealing lip of the old shaft seal (use offset tolerance).
- Lightly lubricate the O-rings before inserting to prevent the rings from being crushed during assembly.
- Check the fluid level in the manual transmission after replacing the seals, O-rings and gaskets (Refer to ⇒ “8 Transmission Fluid, Checking”, page 192 .) or the fluid level in the bevel box (Refer to ⇒ “10 Axle Oil in Bevel Box, Checking or Adding”, page 218 .)

Volkswagen AG. Volkswagen AG does not guarantee or accept any liability with respect to the correctness of information in this document. Copyright by Volkswagen AG.

Circlips

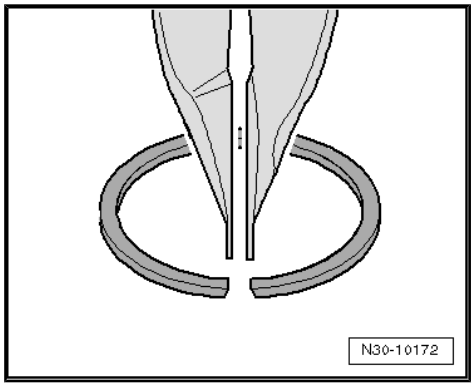

- Do not stretch the circlips.
- Installation position for some of the circlips: the circlip is »narrower at the top« and so is its installation position. This makes it easier for the pliers to grab the circlip when removing and installing it.
- Replace damaged or overstretched locking ring after removing.
- The circlips must rest at the bottom of the groove.
- Replace the adapter sleeves. Installation position: the slot -A- should align with the line of force -arrow-.

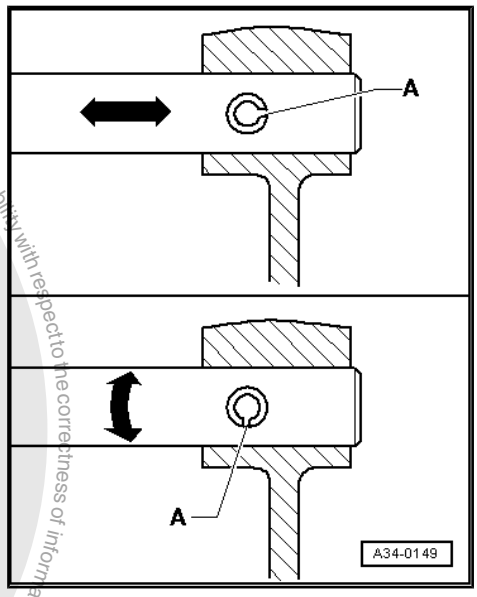

Protected by copyright. Copying for private or commercial purposes, in part or in whole, is not permitted unless authorised by Volkswagen AG. Volkswagen AG does not guarantee or accept any liability with respect to the correctness of information in this document. Copyright by Volkswagen AG.

Bolts and Nuts

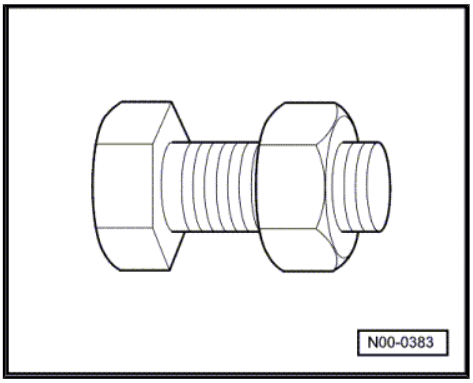

- Always loosen or tighten bolts and nuts on covers and housings diagonally with a tightening sequence.
- Especially delicate components, such as clutch pressure plates, must not be distorted. Loosen and tighten bolts and nuts in stages in a diagonal sequence.
- The tightening specifications given apply to unoiled bolts and nuts.
- Always replace self-locking bolts and nuts.
- Make sure the contact surfaces and visible surfaces on the nuts and bolts are waxed after assembling.
- Use a wire brush to clean the threads of the bolts that were installed with locking fluid. Then insert the bolts with Locking Fluid - AMV 185 101 A1- .
- Clean the threaded holes for the self-locking bolts or for the bolts coated with locking fluid (for example with a thread tap). Otherwise the bolts could shear the next time they are removed.
- Please make sure that the thread pitch is correct so that the proper thread tap is used during cleaning, and the thread does not get damaged.
- Make sure the contact surfaces and visible surfaces on the nuts and bolts are waxed after assembling.

Bearings

- Install needle bearings with the lettered side (thicker metal) facing the fitting tool.
- Insert all the bearings in transmission with transmission fluid.
- Replace all the tapered roller bearings that are on the same shaft, and use tapered roller bearings from the same manufacturer.
- Heat the tapered roller bearing inner races to approximately 100 °C (212 °F) with the Inductive Heat Unit - VAS6414- before installing. Press on to the stop when installing, so there is no axial clearance.
- Do not interchange outer and inner bearing races with those from other bearing of the same size. The bearings are paired.

Shims

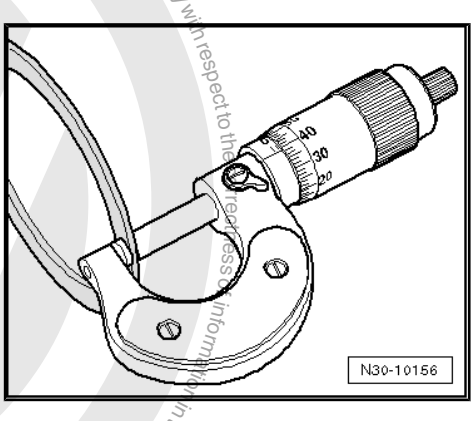

- Measure the shims at several locations with a micrometer caliper. Tolerance variations make it possible to find the exact shim thickness required.
- Check for scratches and damages.
- Only install flawless shims.

Synchronizer Rings

Protected by copyright. Copyright for private or commercial purposes, in part or in whole, is not permitted unless authorized by Volkswagen AG. Volkswagen AG does not guarantee or accept any liability with respect to the correctness of information in this document. Copyright by Volkswagen AG.

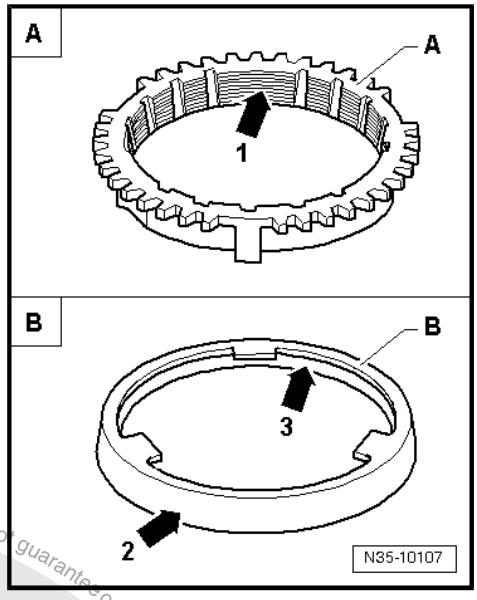

- Do not interchange them. When reusing synchronizer rings, always install on the same gear wheel.
- Check for wear and replace if necessary.
- Check the grooves -arrow 1- on the synchronizer ring -A- and the inner race for flat areas (grooves are worn).
- The coating on the synchronizer rings must not be damaged.
- If an intermediate ring -B- is installed, check the outer friction surface -arrow 2- and the inner friction surface -arrow 3- for »grooves« and »scoring«.
- Check taper of drive gear for »grooves« and »scoring«.
- Coat the synchronizing ring with transmission fluid and then install.

Gear Wheels, Synchronizer Hubs and Needle Bearing Sleeve

- Warm the needle bearing sleeves to approximately 100 °C (212 °F) with an Inductive Heater - VAS6414- .
- Heat the synchronizer hub to approximately 100 °C (212 °F) with the Inductive Heat Unit - VAS6414- before installing. Press on as far as the stop when installing so there is no axial play.
- Heat the gears to approximately 100 °C (212 °F) with the Inductive Heat Unit - VAS6414- before installing. Press on as far as the stop when installing so there is no axial play.
- Pay attention to the installed location.

Selector Gears

- After assembling, check the selector gears for minimum axial clearance and ease of movement.

Clutch

- Do not tilt the clutch pressure plate. Loosen and tighten it diagonally and in small steps.
- To reduce odor caused by a burnt clutch, thoroughly clean the clutch housing and the flywheel running surface with a clean cloth.

Protected by copyright. Copying for private or commercial purposes, in part or in whole, is not permitted unless authorised by Volkswagen AG. Volkswagen AG does not guarantee or accept any liability with respect to the correctness of information in this document. Copyright by Volkswagen AG.

30 – Clutch

1 Clutch Mechanism, Servicing

⇒ “1.1 Overview”, page 21

⇒ “1.2 Overview - Pedal Cluster”, page 23

⇒ “1.3 Over-Center Spring, Removing and Installing”, page 24

⇒ “1.4 Clutch Pedal, Removing and Installing”, page 29

⇒ “1.5 Mounting Bracket, Removing and Installing”, page 35

⇒ “1.6 Clutch Master Cylinder, Removing and Installing”, page 40

⇒ “1.7 Clutch Position Sensor G476 , Removing and Installing”, page 41

⇒ “1.8 Overview - Hydraulics”, page 43

⇒ “1.10 Clutch Mechanism, Bleeding”, page 48

1.1 Overview

Note

- *Get the anti-theft code for the radio before disconnecting the battery.*
- *Disconnect the battery ground cable. Refer to ⇒ Electrical Equipment; Rep. Gr. 27 ; Battery; Battery, Disconnecting and Connecting .*
- *Refer to ⇒ Electrical Equipment; Rep. Gr. 27 ; Battery; Battery, Disconnecting and Connecting when connecting the battery.*
- *Lubricate all bearing areas and contact surfaces.*
- *Refer to the Parts Catalog for the grease allocation.*

Protected by copyright. Copying for private or commercial purposes, in part or in whole, is not permitted unless authorised by Volkswagen AG. Volkswagen AG does not guarantee or accept any liability with respect to the correctness of information in this document. Copyright by Volkswagen AG.

I -
⇒ “1.2 Overview - Pedal Cluster”, page 23 .

II -
⇒ “1.8 Overview - Hydraulics”, page 43 .

III - Overview Hydraulics, RHD

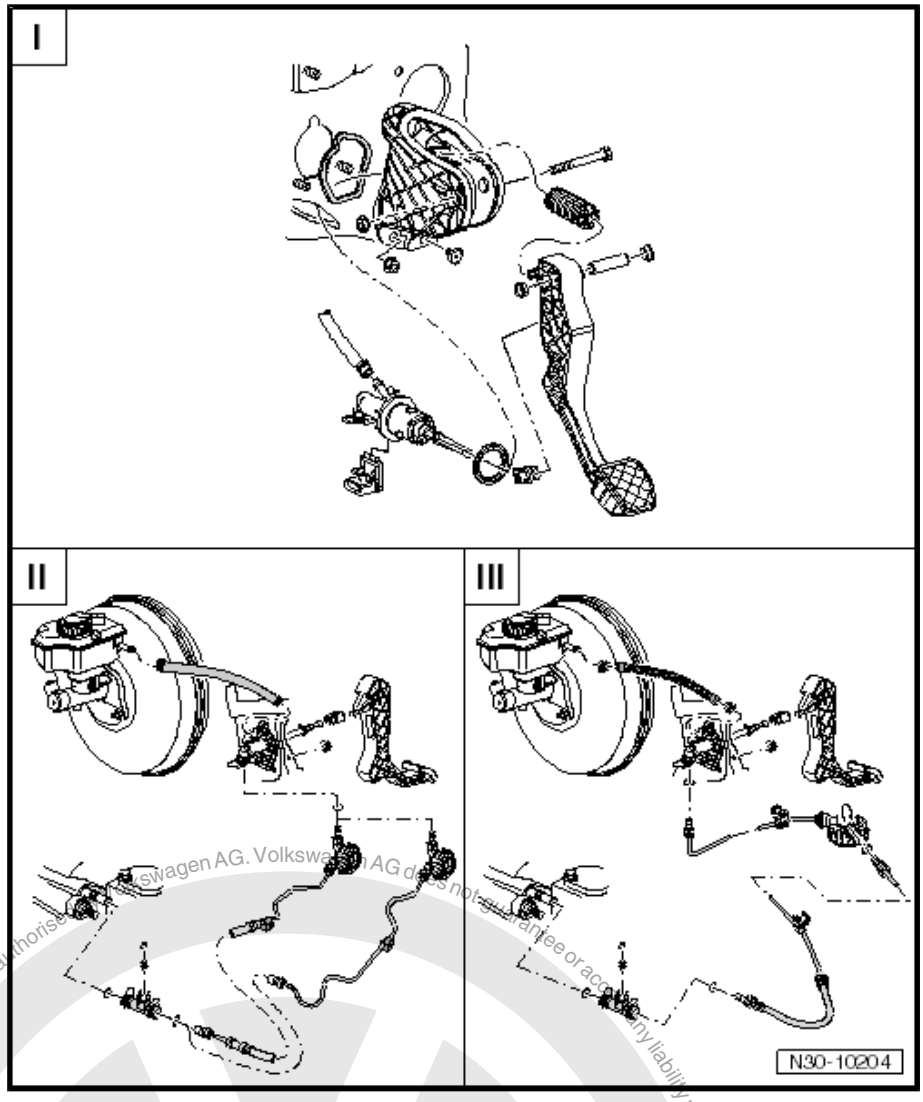

Protected by copyright. Copying for private or commercial purposes, in part or in whole, is not permitted unless authorised by Volkswagen AG. Volkswagen AG does not guarantee or accept any liability with respect to the correctness of information in this document. Copyright by Volkswagen AG.

1.2 Overview - Pedal Cluster

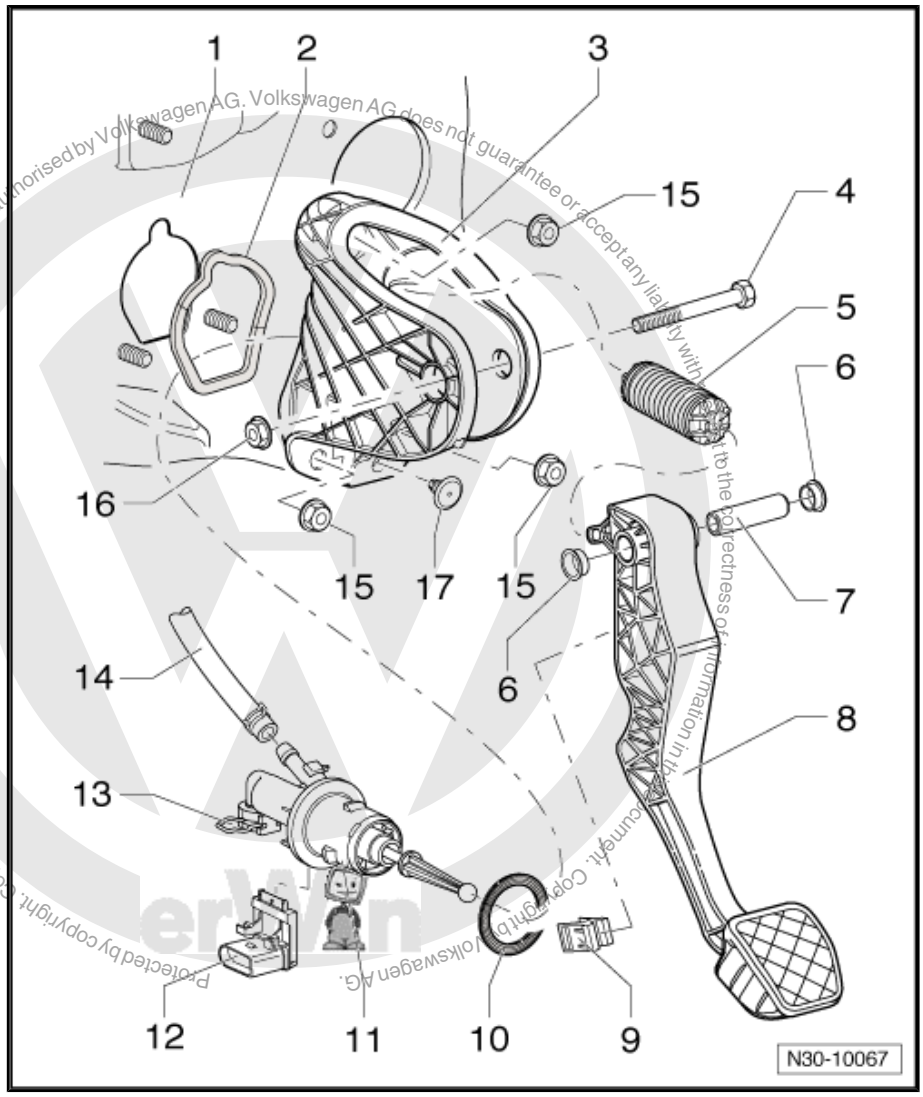

1 - Bulkhead

- ❑ With a mount for the mounting bracket

2 - Seal

- ❑ Replace after removing
- ❑ Between the mounting bracket and bulkhead
- ❑ Self-adhesive
- ❑ Attached to the mounting bracket

3 - Mounting Bracket

- ❑ For the clutch pedal mount
- ❑ Some versions have a damper. Refer to ⇒ Fig. ""Mounting Bracket with Damper -arrow- "", page 24
- ❑ Removing and installing. Refer to ⇒ "1.5 Mounting Bracket, Removing and Installing", page 35 .

4 - Bolt

5 - Over-Center Spring

- ❑ Removing and installing. Refer to ⇒ "1.3 Over-Center Spring, Removing and Installing", page 24 .

6 - Bearing Bushing

7 - Mounting Pin

8 - Clutch Pedal

- ❑ Removing and installing. Refer to ⇒ "1.4 Clutch Pedal, Removing and Installing", page 29 .

9 - Support

- ❑ To remove and install, disconnect the clutch master cylinder from the clutch pedal. Refer to ⇒ "1.4 Clutch Pedal, Removing and Installing", page 29 .

10 - Seal

- ❑ Replace after removing
- ❑ Between the clutch master cylinder and the mounting bracket

11 - Clutch Master Cylinder

- ❑ Removing and installing after removing the mounting bracket. Refer to ⇒ "1.6 Clutch Master Cylinder, Removing and Installing", page 40

12 - Clutch Position Sensor - G476-

- ❑ Removing and installing. Refer to ⇒ "1.7 Clutch Position Sensor G476 , Removing and Installing", page 41 .
- ❑ Can be checked in "Guided Fault Finding" using Vehicle Diagnostic Tester .
- ❑ The Clutch Position Sensor - G476- is called the Clutch Pedal Switch - F36- in "Guided Fault Finding".

Protected by copyright. Copying for private or commercial purposes, in whole or in part, is not permitted unless authorised by Volkswagen AG. Volkswagen AG does not guarantee or accept any liability with respect to the correctness of information in this document. Copyright by Volkswagen AG.

13 - Clamp

- ❑ To remove and install the hose/line assembly or pipe, pull the clamp all the way out.

14 - Hose

- ❑ Rubber
- ❑ Made of plastic from 12/2005. Refer to ⇒ Fig. ""Plastic Hose -1- "" , page 46

15 - Hex Nut

- ❑ 25 Nm
- ❑ Self-locking
- ❑ Quantity: 3
- ❑ For the mounting bracket to the bulkhead
- ❑ Replace after removing

16 - Hex Nut

- ❑ 25 Nm
- ❑ Replace after removing

17 - Stop

- ❑ For the clutch pedal

Mounting Bracket with Damper -arrow-

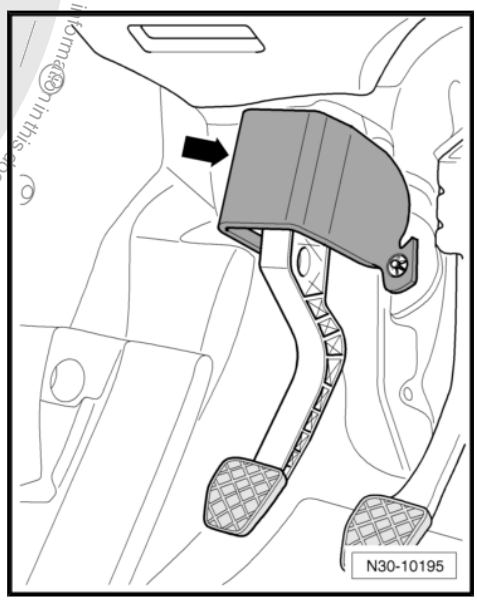

1.3 Over-Center Spring, Removing and Installing

⇒ "1.3.1 Tightening Specifications", page 29

Special tools and workshop equipment required

- ♦ Over-Center Spring Assembly Tool - T10178-

Removing

Vehicles with Knee Airbag

Note

The knee airbag is installed above the foot pedal assembly.

– First check whether a coded radio is installed. If so, obtain the anti-theft code.

Protected by copyright. Copying for private or commercial purposes, in part or in whole, is not permitted unless authorised by Volkswagen AG. Volkswagen AG does not guarantee or accept any liability with respect to the correctness of information in this document. Copyright by Volkswagen AG.

– Disconnect the battery ground cable. Refer to ⇒ Electrical Equipment; Rep. Gr. 27 ; Battery; Battery, Disconnecting and Connecting .

Continuation for All

– Move the driver seat all the way back and raise the steering wheel to the highest position.

– Remove the trim and the cover under the trim on the driver side. Refer to ⇒ Body Interior; Rep. Gr. 68 ; Storage Compartments and Covers; Steering Column Trim Panel, Removing and Installing .

Vehicles with Knee Airbag

– Remove the knee airbag bracket and the impact bolster. Refer to ⇒ Body Interior ; Rep. Gr. 69 .

Continuation for All

– Remove the cable guide -2- from the steering column.

– Remove the footwell vents -3-. Refer to ⇒ Heating, Ventilation and Air Conditioning; Rep. Gr. 80 ; Heating, Servicing; Vents, Removing, Jetta from MY 2011 .

Vehicles without Knee Airbag

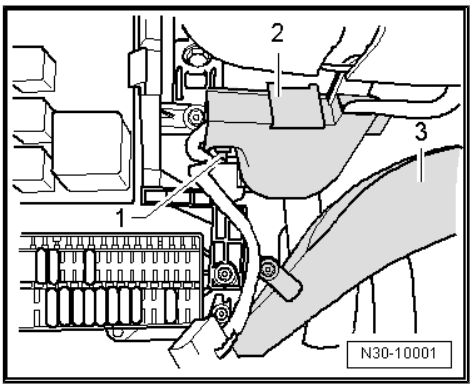

There are different ways of securing the impact bolster -1- in front of the clutch pedal -2-.

Securing with Two Bolts

– Remove the crash bolster -1- (two bolts).

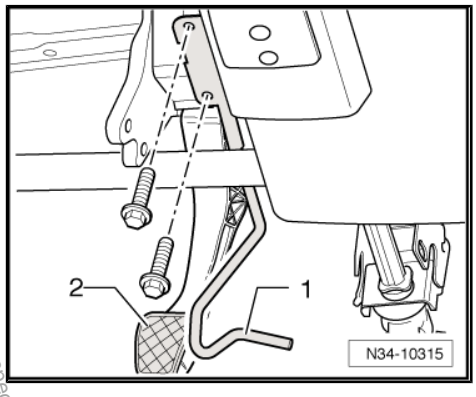

Securing with One Bolt

– Remove the crash bolster -1- (1 bolt -2-).

Continuation for All

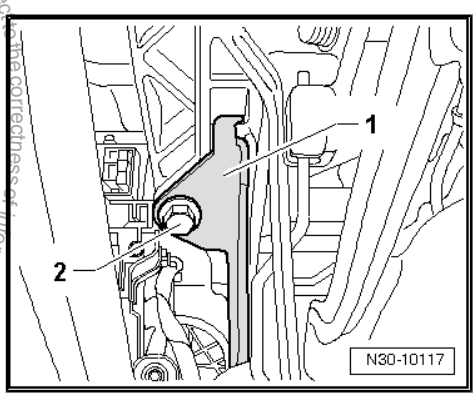

Protected by copyright. Copying for private or commercial purposes, in part or in whole, is not permitted unless authorised by Volkswagen AG. Volkswagen AG does not guarantee or accept any liability with respect to the correctness of information in this document. Copyright by Volkswagen AG.

– Remove the damper -arrow- at the bottom of the mounting bracket/clutch pedal, if equipped.

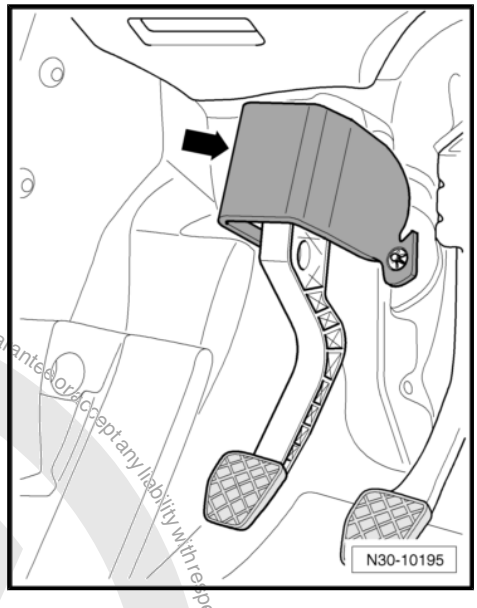

– Remove the washers -A- for the damper.
– Remove the damper.

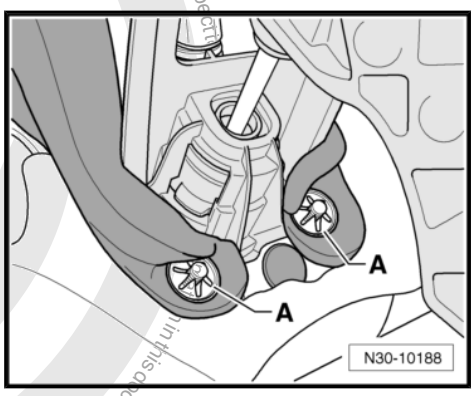

– Push the damper near the upper nut -1- above the clutch pedal -A- upward in the direction of -arrow-.

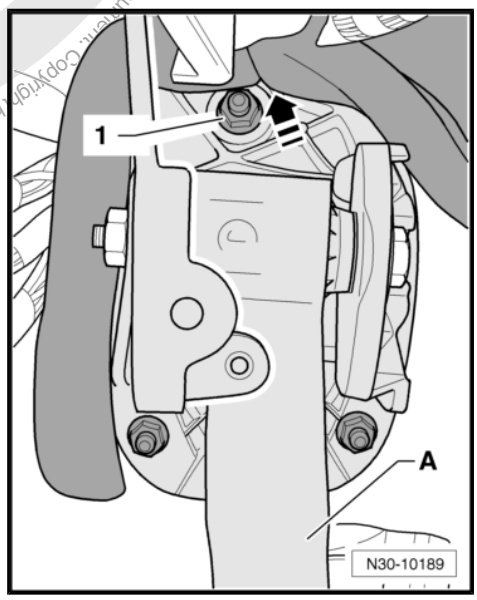

Protected by copyright. Copying for private or commercial purposes, in part or in whole, is not permitted unless authorised by Volkswagen AG. Volkswagen AG does not guarantee or accept any liability with respect to this document. Copyright by Volkswagen AG.

Protected by copyright. Copying for private or commercial purposes, in part or in whole, is not permitted unless authorised by Volkswagen AG. Volkswagen AG does not guarantee or accept any liability with respect to the correctness of information in this document. Copyright by Volkswagen AG.

Remove the nut -2- and the bolt -5- and then remove the clutch pedal -1- from the mounting bracket -3-.

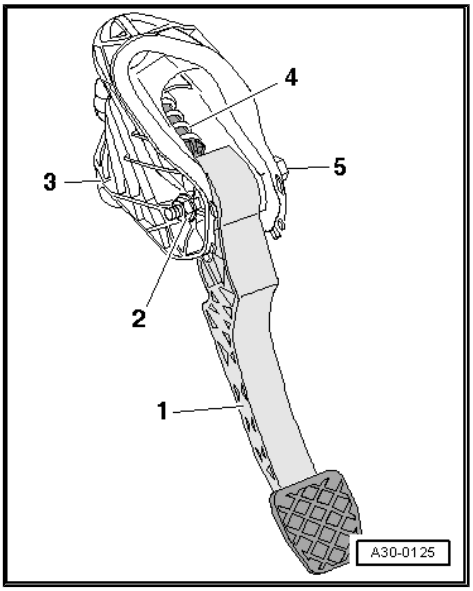

Note

The clutch pedal remains engaged in the clutch master cylinder actuator rod.

– Move the clutch pedal downward and remove the over-center spring -4- from the mounting bracket.

Installing

Install in reverse order of removal while. Note the following:

Note

Replace the self-locking nuts.

– Install the over-center spring -2- into the mounting bracket from the top and hold the end of the spring in its installed position using the Over-Center Spring Assembly Tool - T10178- .

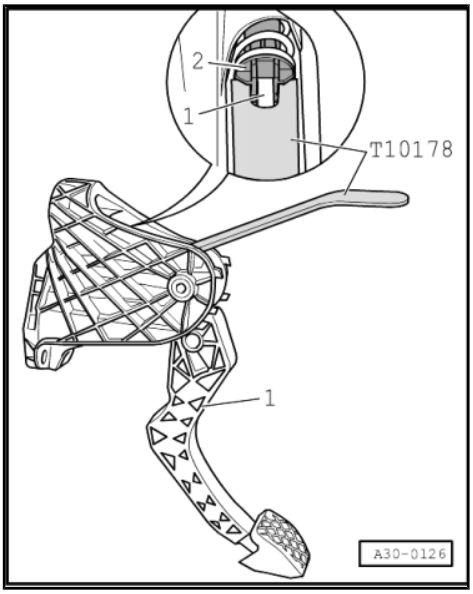

- The mounting area -arrow- for the clutch pedal pivot pin -A- must be positioned vertically.

– Insert the clutch pedal pivot pin -A- into the mounting cup of the over-center spring.

– Press the clutch pedal slightly, push the bolt through and tighten the self-locking nut, tightening specification. Refer to ⇒ “1.3.1 Tightening Specifications”, page 29 .

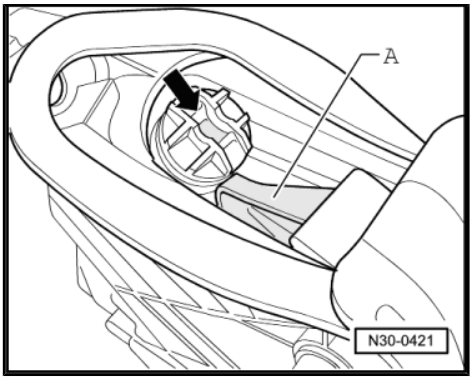

Some vehicles have a damper -arrow- on the mounting bracket/ clutch pedal.

– Bring the damper back into the installation position.

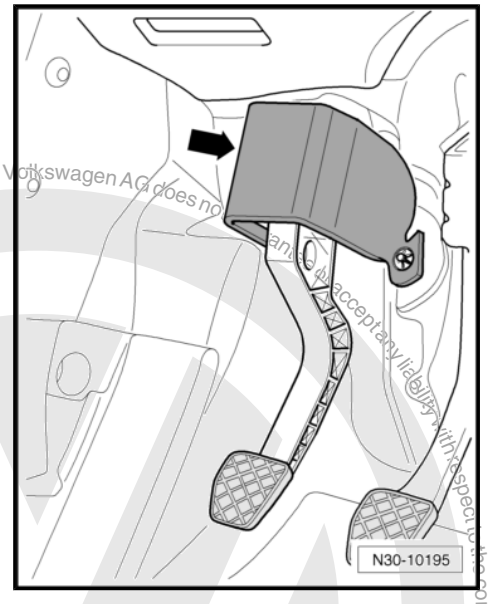

Vehicles without Knee Airbag

There are different ways of securing the impact bolster -1- in front of the clutch pedal -2-.

Securing with Two Bolts

– Install the crash bolster -1- and tighten the 2 bolts to the tightening specification. Refer to
⇒ “1.3.1 Tightening Specifications”, page 29 .

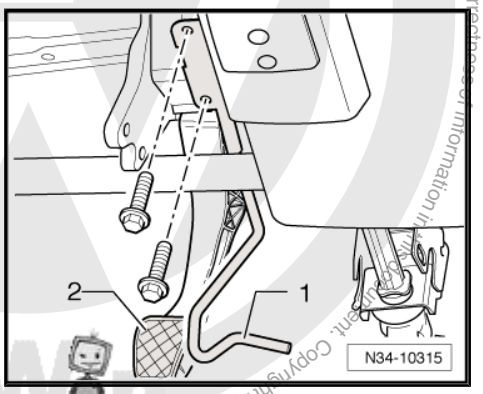

Securing with One Bolt

– Install the crash bolster -1- and tighten the bolt -2- to the tightening specification. Refer to
⇒ “1.3.1 Tightening Specifications”, page 29 .

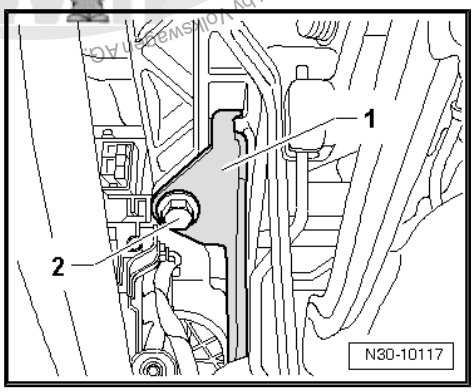

Continuation for All

Protected by copyright. Copying for private or commercial purposes, in part or in whole, is not permitted unless authorised by Volkswagen AG. Volkswagen AG does not guarantee or accept any liability with respect to the correctness of information in this document. Copyright by Volkswagen AG.

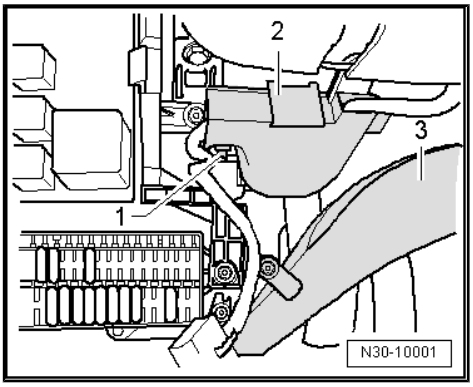

– Attach the cable guide -2- to the steering column.

– Install the footwell vents -3-. Refer to ⇒ Heating, Ventilation and Air Conditioning; Rep. Gr. 80 ; Heating, Servicing; Vents, Removing, Jetta from MY 2011 .

Vehicles with Knee Airbag

– Install the knee airbag bracket and the impact bolster. Refer to ⇒ Body Interior ; Rep. Gr. 69 .

Continuation for All

– Install the trim and the cover under the trim on the driver side. Refer to ⇒ Body Interior; Rep. Gr. 68 ; Storage Compartments and Covers; Steering Column Trim Panel, Removing and Installing .

– If disconnected, connect the battery. Refer to ⇒ Electrical Equipment; Rep. Gr. 27 ; Battery; Battery, Disconnecting and Connecting .

1.3.1 Tightening Specifications

Component	Nm
Clutch pedal to mounting bracket ♦ Replace the self-locking nuts.	25
Impact bolster to mounting bracket/steering column (secured with two bolts)	10
Impact bolster to mounting bracket/steering column (secured with one bolt)	20
♦ Replace the impact bolster bolts.	

1.4 Clutch Pedal, Removing and Installing

⇒ "1.4.1 Tightening Specifications", page 34

Special tools and workshop equipment required

♦ Clutch Pedal Pliers - T10005-

♦ Over-Center Spring Assembly Tool - T10178-

Removing

Vehicles with Knee Airbag

Note

The knee airbag is installed above the foot pedal assembly.

– First check whether a coded radio is installed. If so, obtain the anti-theft code.

– Disconnect the battery ground cable. Refer to ⇒ Electrical Equipment; Rep. Gr. 27 ; Battery; Battery, Disconnecting and Connecting .

Continuation for All

– Move the driver seat all the way back and raise the steering wheel to the highest position.

– Remove the trim and the cover under the trim on the driver side. Refer to ⇒ Body Interior; Rep. Gr. 68 ; Storage Compartments and Covers; Steering Column Trim Panel, Removing and Installing .

Protected by Copyright. Copyright by Volkswagen AG. Volkswagen AG does not guarantee or accept any liability with respect to the correctness of information in this document. Copyright by Volkswagen AG. Protected by Copyright. Copying for private or commercial purposes, in part or in whole, is not permitted unless authorised by Volkswagen AG.

Vehicles with Knee Airbag

– Remove the knee airbag bracket and the impact bolster. Refer to ⇒ Body Interior ; Rep. Gr. 69 .

Continuation for All

– Remove the cable guide -2- from the steering column.

– Remove the footwell vents -3-. Refer to ⇒ Heating, Ventilation and Air Conditioning; Rep. Gr. 80 ; Heating, Servicing; Vents, Removing, Jetta from MY 2011 .

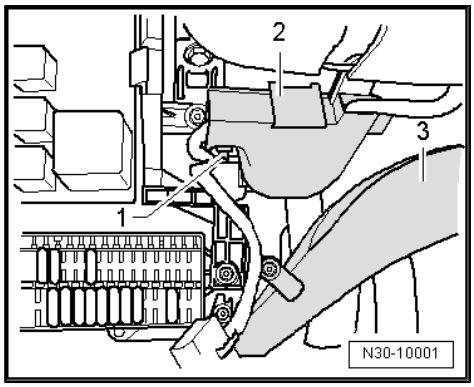

Vehicles without Knee Airbag

There are different ways of securing the impact bolster -1- in front of the clutch pedal -2-.

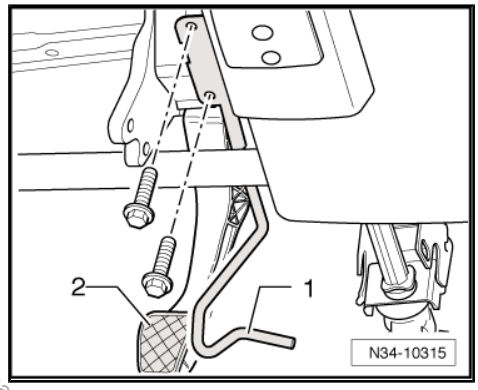

Securing with Two Bolts

– Remove the crash bolster -1- (two bolts).

Securing with One Bolt

– Remove the crash bolster -1- (1 bolt -2-).

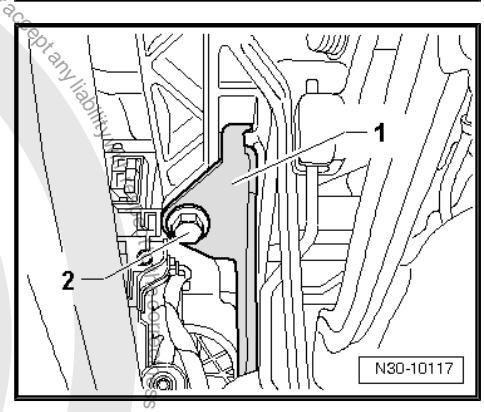

Continuation for All

Protected by copyright. Copying for private or commercial purposes, in part or in whole, is not permitted unless authorised by Volkswagen AG. Volkswagen AG does not guarantee or accept any liability with respect to the correctness of information in this document. Copyright by Volkswagen AG.

Protected by copyright. Copying for private or commercial purposes, in part or in whole, is not permitted unless authorised by Volkswagen AG. Volkswagen AG does not guarantee or accept any liability with respect to the correctness of information in this document. Copyright by Volkswagen AG.

– Remove the damper -arrow- at the bottom of the mounting bracket/clutch pedal, if equipped.

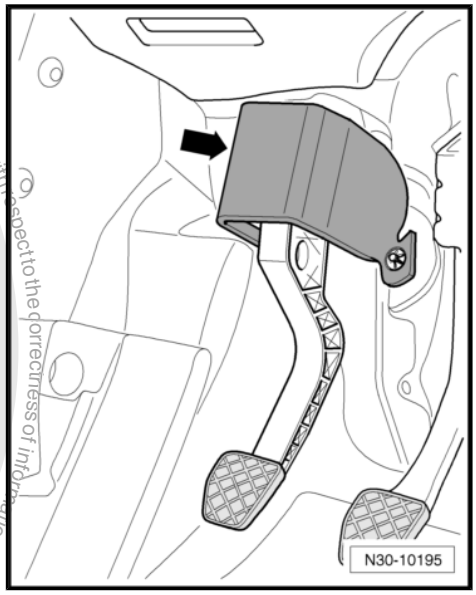

– Remove the washers -A- for the damper.
– Remove the damper.

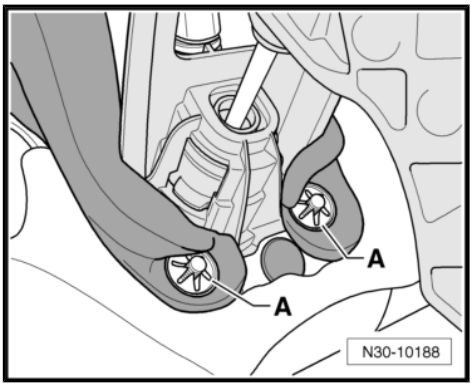

– Push the damper near the upper nut -1- above the clutch pedal -A- upward in the direction of -arrow-.

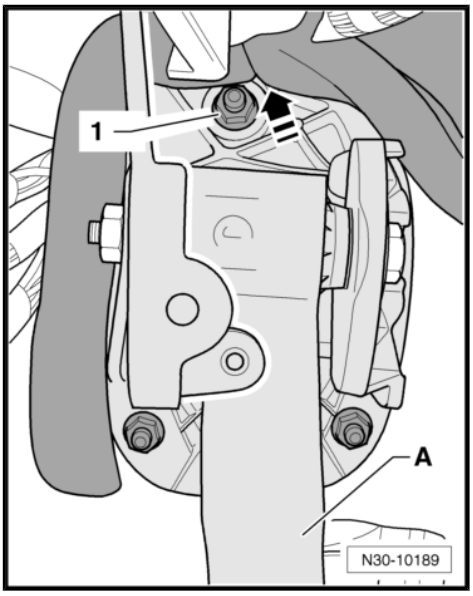

– Remove the nut -2- and the bolt -5- and then remove the clutch pedal -1- from the mounting bracket -3-.
– Move the clutch pedal foreword and remove the over-center spring -4- from the mounting bracket.

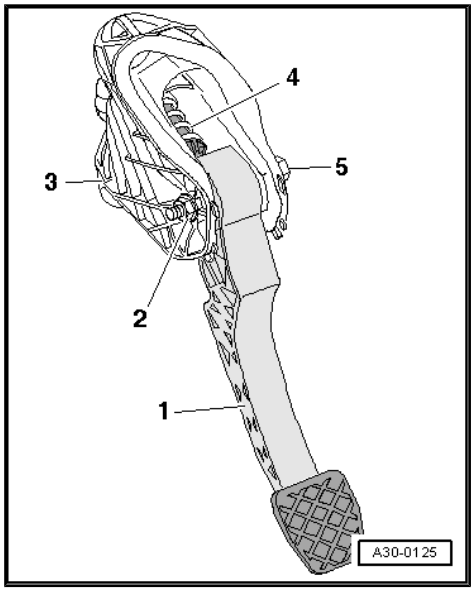

– Release clutch pedal from clutch master cylinder with Clutch Pedal Pliers - T10005- .
– Remove the clutch pedal.

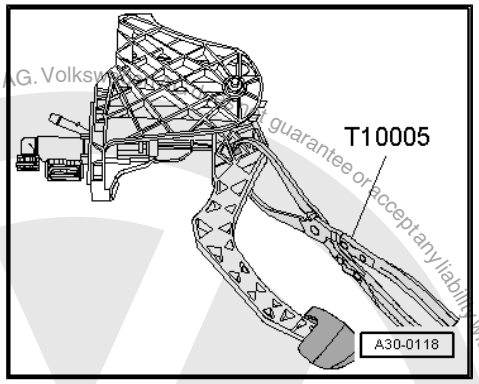

Installing

Install in reverse order of removal while. Note the following:

Note

Replace the self-locking nuts.

– Install the mount -2- on the clutch master cylinder actuator rod -1-.
– Press mount until it engages audibly in notch on clutch pedal -3-.

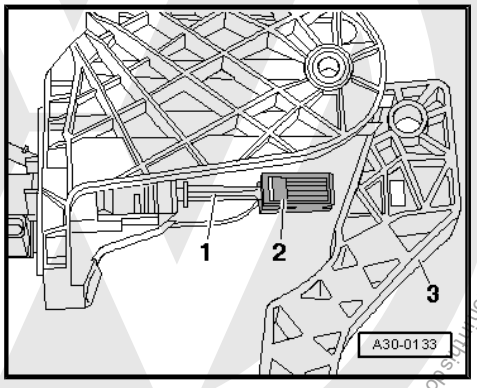

Protected by copyright. Copying for private or commercial purposes, in part or in whole, is not permitted unless authorised by Volkswagen AG. Volkswagen AG does not guarantee or accept any liability with respect to the correctness of information in this document. Copyright by Volkswagen AG.

– Install the over-center spring -2- into the mounting bracket from the top and hold the end of the spring in its installed position using the Over-Center Spring Assembly Tool - T10178- .

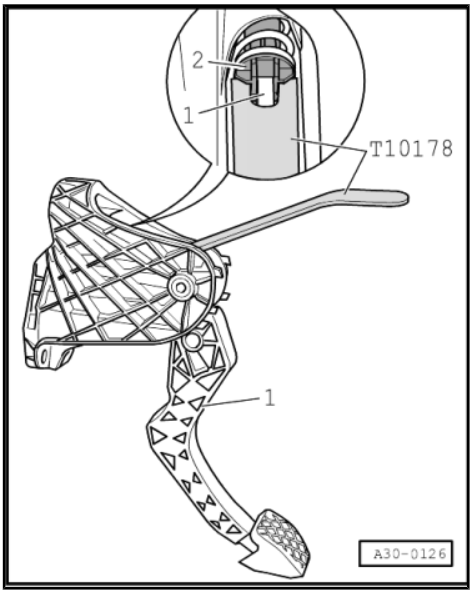

• The mounting area -arrow- for the clutch pedal pivot pin -A- must be positioned vertically.

– Insert the clutch pedal pivot pin -A- into the mounting cup of the over-center spring.

– Press the clutch pedal slightly, push the bolt through and tighten the self-locking nut to the tightening specification. Refer to ⇒ “1.4.1 Tightening Specifications”, page 34 .

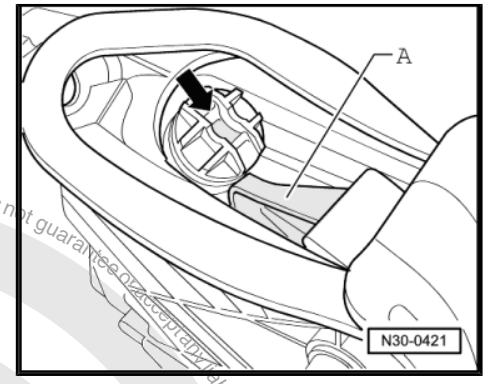

Some vehicles have a damper -arrow- on the mounting bracket/ clutch pedal.

– Bring the damper back into the installation position.

Vehicles without Knee Airbag

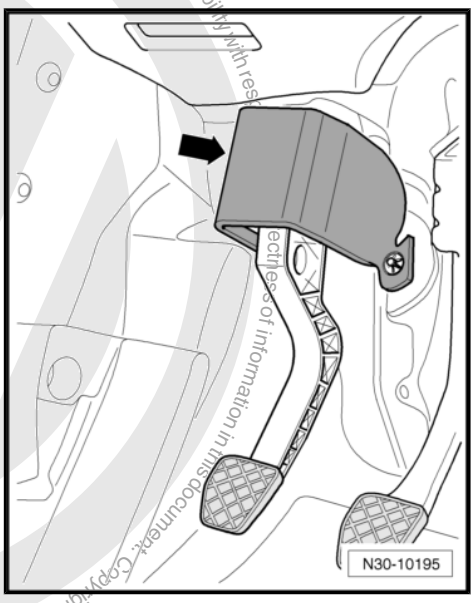

Protected by copyright. Copying for private or commercial purposes, in part or whole, is not permitted unless authorised by Volkswagen AG. Volkswagen AG does not guarantee or accept any liability with respect to the correctness of information in this document. Copyright by Volkswagen AG.

There are different ways of securing the impact bolster -1- in front of the clutch pedal -2-.

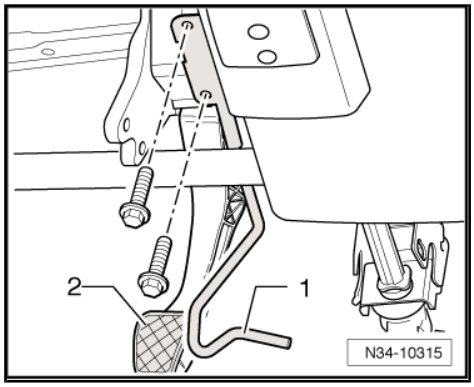

Securing with Two Bolts

– Install the crash bolster -1- and tighten the 2 bolts to the tightening specification. Refer to
⇒ “1.4.1 Tightening Specifications”, page 34 .

Securing with One Bolt

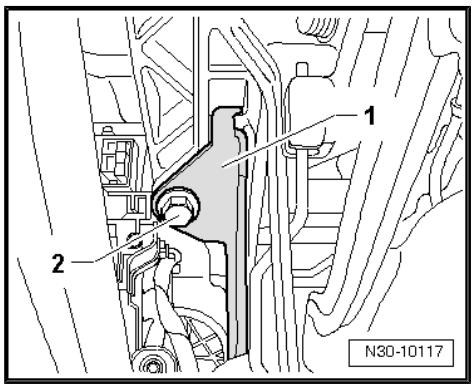

– Install the crash bolster -1- and tighten the bolt -2- to the tightening specification. Refer to
⇒ “1.4.1 Tightening Specifications”, page 34 .

Continuation for All

– Attach the cable guide -2- to the steering column.

– Install the footwell vents -3-. Refer to ⇒ Heating, Ventilation and Air Conditioning; Rep. Gr. 80 ; Heating, Servicing; Vents, Removing, Jetta from MY 2011 .

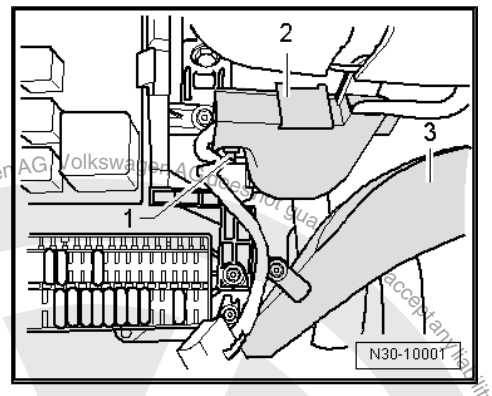

Vehicles with Knee Airbag

– Install the knee airbag bracket and the impact bolster. Refer to ⇒ Body Interior ; Rep. Gr. 69 .

Continuation for All

– Install the trim and the cover under the trim on the driver side. Refer to ⇒ Body Interior; Rep. Gr. 68 ; Storage Compartments and Covers; Steering Column Trim Panel, Removing and Installing .

– Connect the battery and follow the steps for after connecting the battery. Refer to ⇒ Electrical Equipment; Rep. Gr. 27 ; Battery; Battery, Disconnecting and Connecting .

1.4.1 Tightening Specifications

Component	Nm
Clutch pedal to mounting bracket ♦ Replace the self-locking nuts.	25
Impact bolster to mounting bracket/steering column (secured with two bolts)	10
Impact bolster to mounting bracket/steering column (secured with one bolt)	20
♦ Replace the impact bolster bolts	

Protected by copyright. Copying for private or commercial purposes, in part or in whole, is not permitted unless authorised by Volkswagen AG. Volkswagen AG does not guarantee or accept any liability with respect to the correctness of information in this document. Copyright by Volkswagen AG.

1.5 Mounting Bracket, Removing and Installing

⇒ "1.5.1 Tightening Specifications", page 40

Special tools and workshop equipment required

- Hose Clamps - Up To 25mm - 3094-
- Hose Clip Pliers - VAS6362-
- Sealing Tool - T10249-

Removing

– First check whether a coded radio is installed. If so, obtain the anti-theft code.

– Disconnect the battery ground cable. Refer to ⇒ Electrical Equipment; Rep. Gr. 27 ; Battery; Battery, Disconnecting and Connecting .

– Remove entire air filter housing if it is located near the battery. Refer to ⇒ Rep. Gr. 23 ; Diesel Direct Injection System; Air Filter Housing, Removing and Installing or ⇒ Rep. Gr. 24 ; Air Filter; Air Filter Housing, Removing and Installing .

– Remove the battery and the battery tray. Refer to ⇒ Electrical Equipment; Rep. Gr. 27 ; Battery; Battery, Removing and Installing .

Note

- *While performing the following work, make sure no brake fluid comes into contact with the longitudinal member or the transmission. If it does, clean the area thoroughly.*
- *Place a lint-free cloth under the clutch master cylinder.*

– Clamp off the supply hose to the clutch master cylinder using Hose Clamps - Up To 25mm - 3094- .

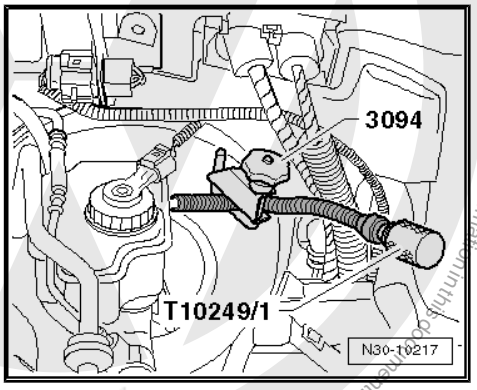

Protected by copyright. Copying for private or commercial purposes, in part or in whole, is not permitted unless authorised by Volkswagen AG. Volkswagen AG does not guarantee or accept any liability with respect to the correctness of information in this document. Copyright by Volkswagen AG.

– Loosen the spring clamp -3- using the Hose Clip Pliers - VAS6362- and remove the return hose from the clutch master cylinder.

– For disconnecting, seal it with Sealing Tool - T10249/1- (⇒ top illustration).

– Open the clip -2- with a screwdriver or pointed tool and remove the hose/line assembly and the pipe -1- on the clutch master cylinder.

– Unclip the Clutch Position Sensor - G476- from the clutch master cylinder -arrow- and remove it with the connector -4- still connected.

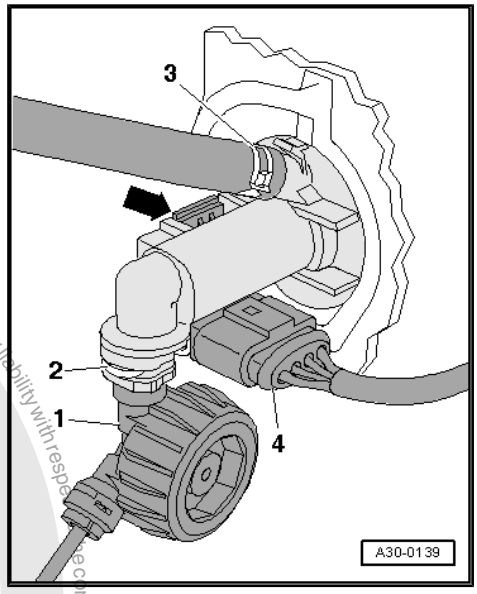

Note

When working in the floor area, cover the carpet with a cloth to protect against any leaking brake fluid.

Remove the trim and the cover under the trim on the driver side. Refer to ⇒ Body Interior; Rep. Gr. 68 ; Storage Compartments and Covers; Steering Column Trim Panel, Removing and Installing .

Vehicles with Knee Airbag

– Remove the knee airbag bracket and the impact bolster. Refer to ⇒ Body Interior ; Rep. Gr. 69 .

Continuation for All

– Remove the cable guide -2- from the steering column.

– Remove the footwell vents -3-. Refer to ⇒ Heating, Ventilation and Air Conditioning; Rep. Gr. 80 ; Heating, Servicing; Vents, Removing, Jetta from MY 2011 .

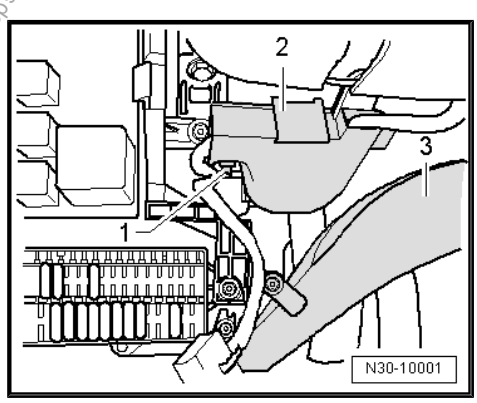

Vehicles without Knee Airbag

There are different ways of securing the impact bolster -1- in front of the clutch pedal -2-.

Securing with Two Bolts

– Remove the impact bolster (two bolts).

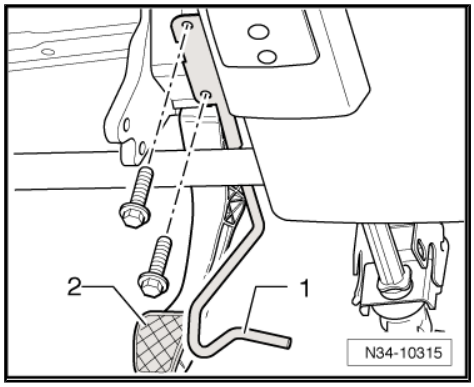

Volkswagen AG. Volkswagen AG does not guarantee or accept any liability with respect to the correctness of information in this document. Copyright by Volkswagen AG.

Securing with One Bolt

– Remove the crash bolster -1- (1 bolt -2-).

Continuation for All

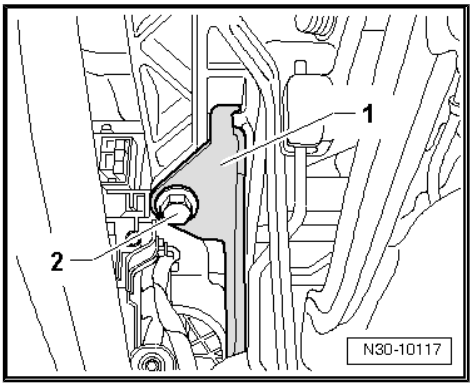

– Remove the damper -arrow- at the bottom of the mounting bracket/clutch pedal, if equipped.

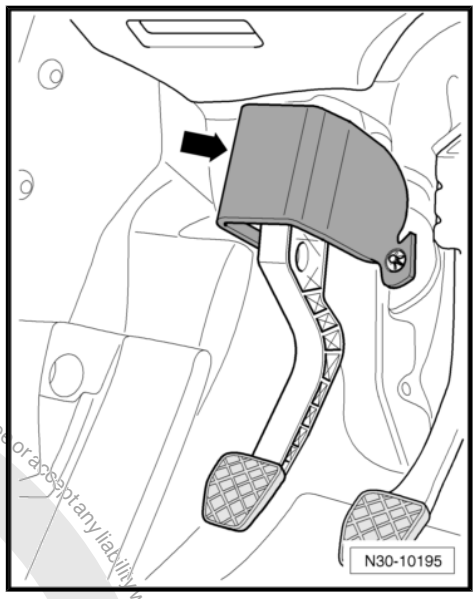

– Remove the washers -A- for the damper.
– Remove the damper.

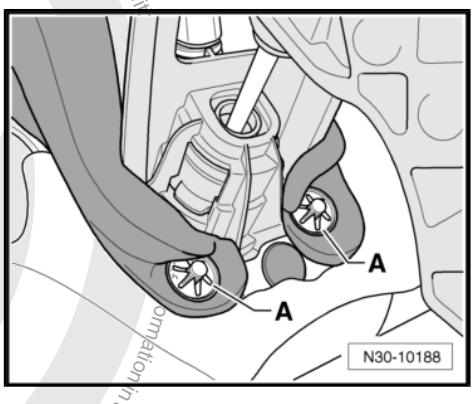

Protected by copyright. Copying for private or commercial purposes, in part or in whole, is not permitted unless authorised by Volkswagen AG. Volkswagen AG does not guarantee or accept any liability with respect to the correctness of information in this document. Copyright by Volkswagen AG.

– Push the damper near the upper nut -1- above the clutch pedal -A- upward in the direction of -arrow-.

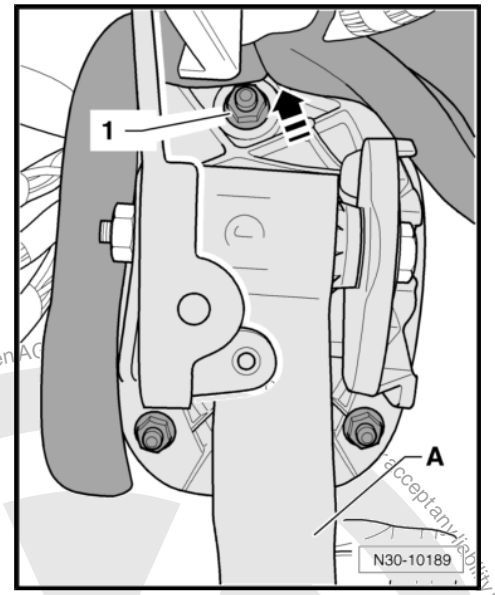

– Remove the nuts -1 and 2-.

The upper nut -1- is accessible between the relay panel and steering column trim.

– Remove the mounting bracket -3-.

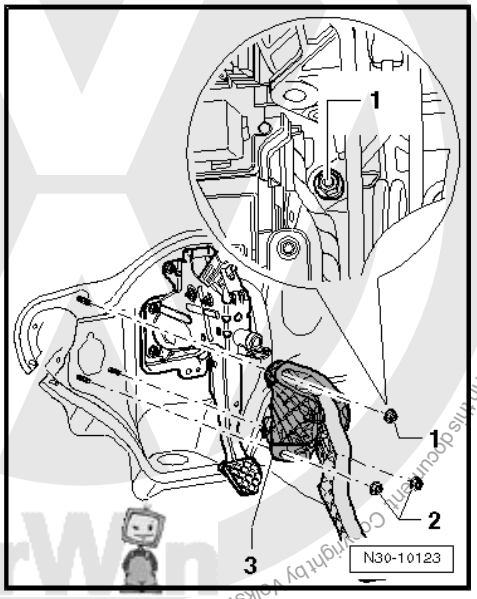

Installing

Install in reverse order of removal while. Note the following:

Note

- *Replace the self-locking nuts.*
- *Replace the hose clamps*
- *Allocate all components according to the Parts Catalog.*

Some vehicles have a damper -arrow- on the mounting bracket/ clutch pedal.

Vehicles without Knee Airbag

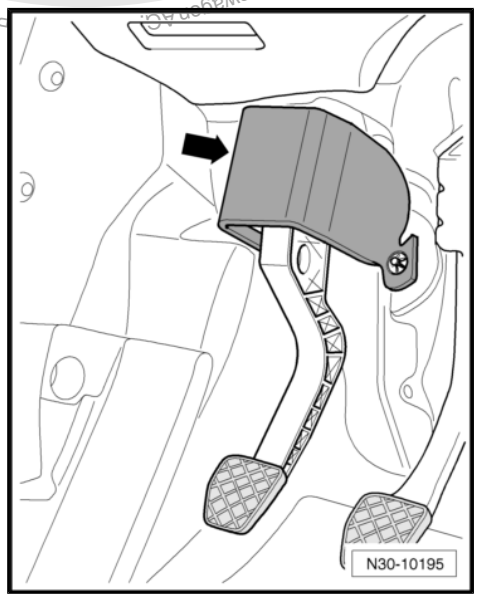

Protected by copyright. Copying for private or commercial purposes, in part or in whole, is not permitted unless authorised by Volkswagen AG. Copyright by Volkswagen AG. We accept no liability with respect to the correctness of information in this document.

There are different ways of securing the impact bolster -1- in front of the clutch pedal -2-.

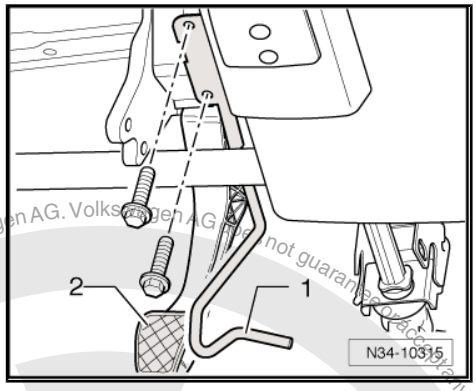

Securing with Two Bolts

– Install the crash bolster -1- and tighten the 2 bolts to the tightening specification. Refer to
⇒ “1.5.1 Tightening Specifications”, page 40 .

Securing with One Bolt

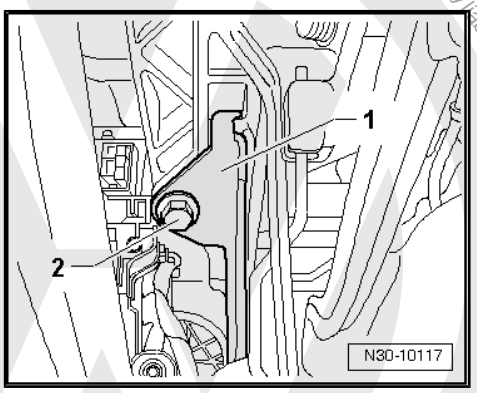

– Install the crash bolster -1- and tighten the bolt -2- to the tightening specification. Refer to
⇒ “1.5.1 Tightening Specifications”, page 40 .

Continuation for All

– Attach the cable guide -2- to the steering column.

– Install the footwell vents -3-. Refer to ⇒ Heating, Ventilation and Air Conditioning; Rep. Gr. 80 ; Heating; Servicing; Vents, Removing, Jetta from MY 2011 .

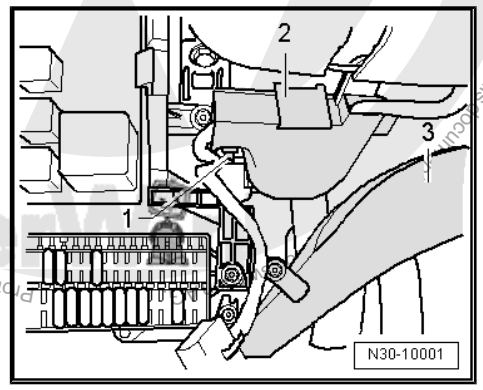

Vehicles with Knee Airbag

– Install the knee airbag bracket and the impact bolster. Refer to ⇒ Body Interior ; Rep. Gr. 69 .

Continuation for All

– Install the trim and the cover under the trim on the driver side. Refer to ⇒ Body Interior; Rep. Gr. 68 ; Storage Compartments and Covers; Steering Column Trim Panel, Removing and Installing .

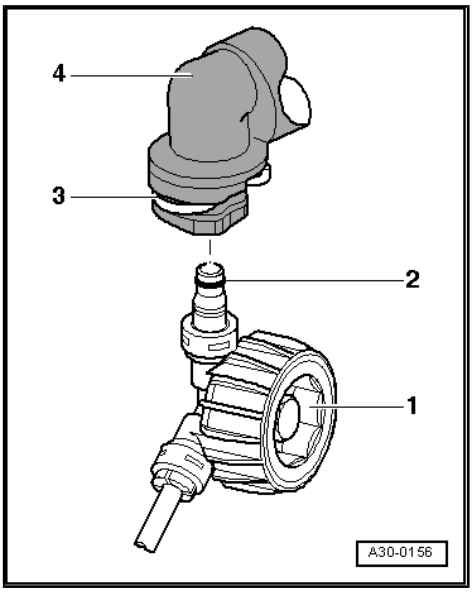

– Install the hose/line assembly and pipe line -1- with the seal -2- on the clutch master cylinder connection -4- until the clip -3- audibly engages.

– Pull on the line to make sure it is secure.

– After removing the Hose Clamps - Up To 25mm - 3094- , bring the return hose back to its original shape.

– Bleed the clutch mechanism. Refer to
⇒ “1.10 Clutch Mechanism, Bleeding”, page 48 .

– Install the battery tray and the battery. Refer to ⇒ Electrical Equipment; Rep. Gr. 27 ; Battery; Battery, Removing and Installing .

– Install entire air filter housing if it is located near the battery. Refer to ⇒ Rep. Gr. 23 ; Diesel Direct Injection System; Air Filter Housing, Removing and Installing or ⇒ Rep. Gr. 24 ; Air Filter; Air Filter Housing, Removing and Installing .

– Connect the battery and follow the steps for after connecting the battery. Refer to ⇒ Electrical Equipment; Rep. Gr. 27 ; Battery; Battery, Disconnecting and Connecting .

Protected by copyright. Copying for private or commercial purposes, in part or in whole, is not permitted unless authorised by Volkswagen AG. Volkswagen AG does not guarantee or accept any liability with respect to the correctness of information in this document.

1.5.1 Tightening Specifications

Component	Nm
Mounting bracket to bulkhead ♦ Replace the self-locking nuts.	25
Impact bolster to mounting bracket/steering column (secured with two bolts)	10
Impact bolster to mounting bracket/steering column (secured with one bolt)	20
♦ Replace the impact bolster bolts	

1.6 Clutch Master Cylinder, Removing and Installing

Special tools and workshop equipment required

♦ Clutch Pedal Pliers - T10005-

Removing

– Remove the mounting bracket. Refer to ⇒ "1.5 Mounting Bracket, Removing and Installing", page 35 .

– Disengage the mount for the clutch master cylinder actuator rod using the Clutch Pedal Pliers - T10005- .

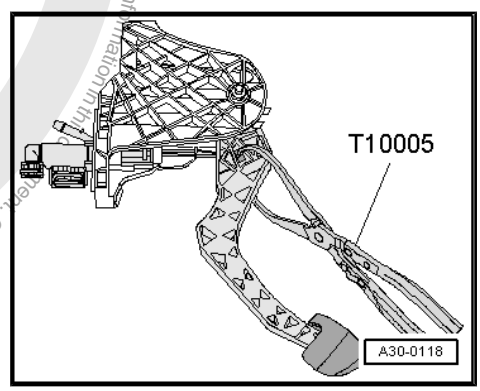

– Place a spacer -A- between the clutch pedal and the stop and then push the clutch pedal as far as the spacer.

♦ Length of spacer = approximately 40 mm (1.57 in.) (for example $^{1}/_{2}$" socket insert)

– Disengage the securing bracket -B- and remove the clutch master cylinder from the mounting bracket in direction of -arrow 1 and arrow 2-.

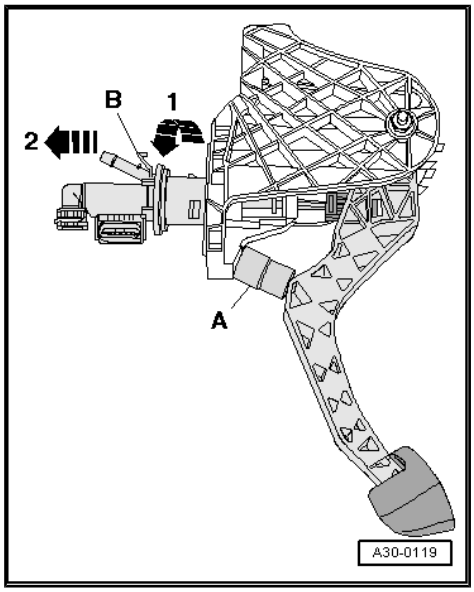

Installing

• Move the clutch pedal up to the stop in its resting position.

Protected by copyright. Copying for private or commercial purposes, in part or in whole, is not permitted unless authorised by Volkswagen AG. Volkswagen AG does not guarantee or accept any liability with respect to the correctness of information. Copyright by Volkswagen AG.

– Install the mount -2- on the clutch master cylinder actuator rod -1-.

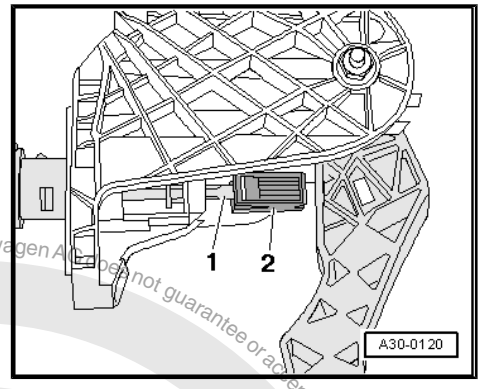

– Place a spacer -A- between the clutch pedal and the stop and then push the clutch pedal as far as the spacer.

♦ Length of spacer = approximately 40 mm (1.57 in.) (for example $^1/_2$" socket insert)

– Install the clutch master cylinder on the mounting bracket in direction of -arrow 1 and arrow 2-.

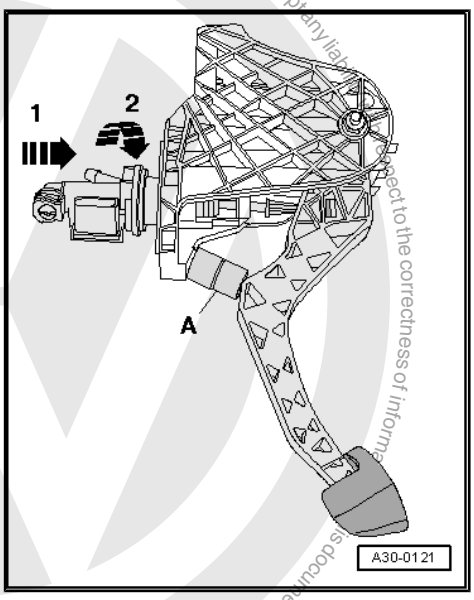

– Push the clutch master cylinder actuator rod -1- in direction of -arrow- until the mount -2- clicks into the place in the clutch pedal.

– Install the mounting bracket. Refer to ⇒ “1.5 Mounting Bracket, Removing and Installing”, page 35 .

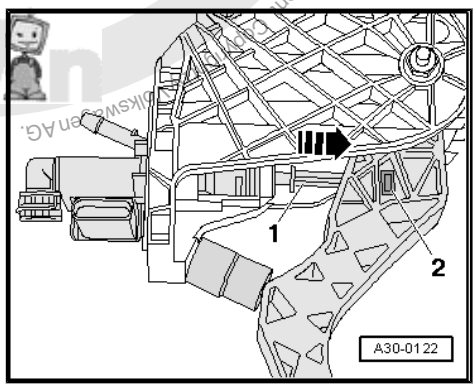

1.7 Clutch Position Sensor - G476- , Removing and Installing

Special tools and workshop equipment required

♦ Hose Clamps - Up To 25mm - 3094-

Removing

– First check whether a coded radio is installed. If so, obtain the anti-theft code.

– Disconnect the battery ground cable. Refer to ⇒ Electrical Equipment; Rep. Gr. 27 ; Battery; Battery, Disconnecting and Connecting .

– Remove entire air filter housing if it is located near the battery. Refer to ⇒ Rep. Gr. 23 ; Diesel Direct Injection System; Air

Protected by copyright. Copying for private or commercial purposes, in part or in whole, is not permitted unless authorised by Volkswagen AG. Volkswagen AG does not guarantee or accept any liability with respect to the correctness of information in this document. Copyright by Volkswagen AG.

Filter Housing, Removing and Installing or ⇒ Rep. Gr. 24 ; Air Filter; Air Filter Housing, Removing and Installing .

– Remove the battery and the battery tray. Refer to ⇒ Electrical Equipment; Rep. Gr. 27 ; Battery; Battery, Removing and Installing .

If a Hose/Line Assembly -1- with a Round Component Is Installed Directly below the Clutch Master Cylinder, Hose/Line Assembly Must Be Removed.

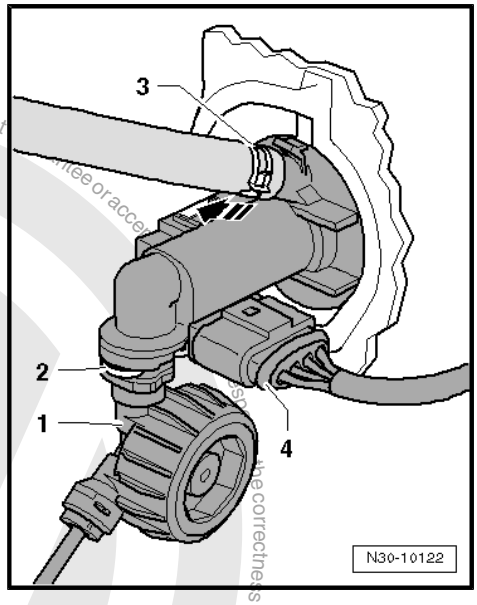

Note

While performing the following work, make sure no brake fluid comes into contact with the longitudinal member or the transmission. If it does, clean the area thoroughly.

– Place a lint-free cloth under the clutch master cylinder.

– Clamp off the hose to the clutch master cylinder using Hose Clamps - Up To 25mm - 3094- .

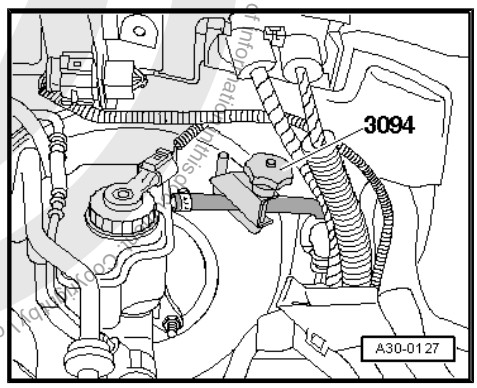

Protected by copyright. Copying for private or commercial purposes, in part or in whole, is not permitted unless authorised by Volkswagen AG. Volkswagen AG does not guarantee or accept any liability with respect to the correctness of information in this copy. Copyright by Volkswagen AG.

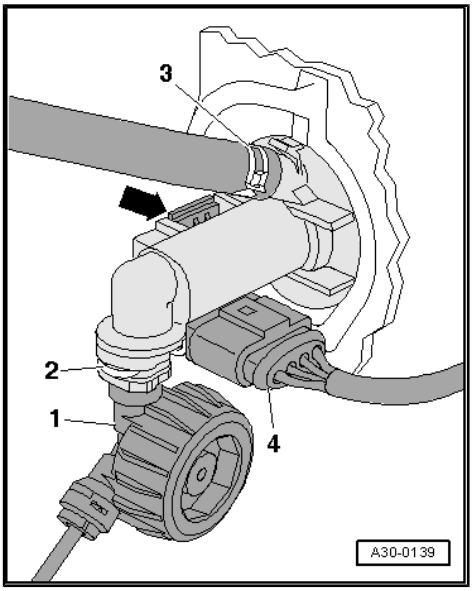

– Disengage the clamp -2- using a screwdriver or a pointed tool and pull the clutch master cylinder out until it stops.
– Remove the hose/line assembly -1- and the pipe from the clutch master cylinder and seal it off.
– Disconnect the connector -4-.
– Unclip the Clutch Position Sensor - G476- from the clutch master cylinder -arrow- and remove it.

Note

Ignore item -3-.

Installing

Install in reverse order of removal while. Note the following:

Note

- *Replace the hose clamps*
- *Allocate all components according to the Parts Catalog.*

If the Hose/Line Assembly was Removed

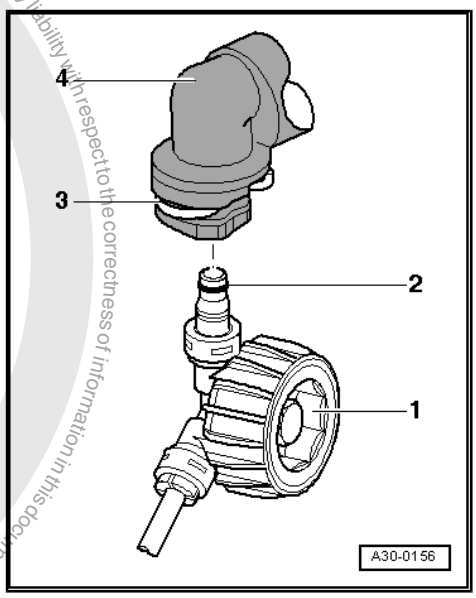

– Install the hose/line assembly -1- and the pipe line with the seal -2- on the clutch master cylinder connection -4- until the clip -3- audibly engages.
– Pull on the hose/line assembly and pipe to make sure it is secure.
– After removing the Hose Clamps - Up To 25mm - 3094- , bring the return hose back to its original shape.
– Bleed the clutch mechanism. Refer to ⇒ “1.10 Clutch Mechanism, Bleeding”, page 48 .
– Install the battery tray and the battery. Refer to ⇒ Electrical Equipment; Rep. Gr. 27 ; Battery; Battery, Removing and Installing .
– Install entire air filter housing if it is located near the battery. Refer to ⇒ Rep. Gr. 23 ; Diesel Direct Injection System; Air Filter Housing, Removing and Installing or ⇒ Rep. Gr. 24 ; Air Filter; Air Filter Housing, Removing and Installing .
– Connect the battery and follow the steps for after connecting the battery. Refer to ⇒ Electrical Equipment; Rep. Gr. 27 ; Battery; Battery, Disconnecting and Connecting .

1.8 Overview - Hydraulics

Copyright by Volkswagen AG. Volkswagen AG does not guarantee or accept any liability with respect to the correctness of information in this document.

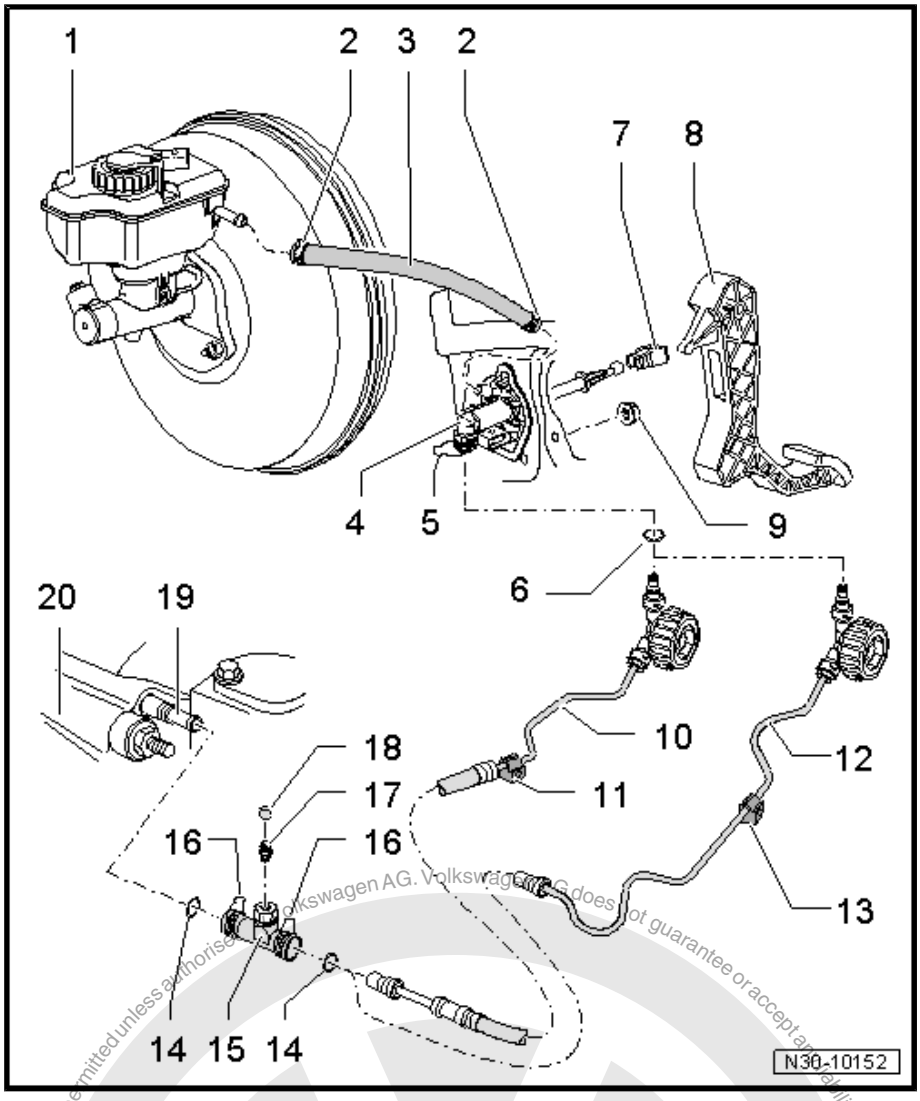

1 - Brake Fluid Reservoir

2 - Spring Clamp

- ❑ Not on all vehicles

3 - Hose

- ❑ Rubber
- ❑ As of 12.2005, made of plastic. Refer to ⇒ Fig. ""Plastic Hose -1- "" , page 46

4 - Clutch Master Cylinder

- ❑ Removing and installing. Refer to ⇒ "1.6 Clutch Master Cylinder, Removing and Installing", page 40 .

5 - Clamp

- ❑ To remove and install the hose/line assembly or pipe, pull the clamp all the way out.
- ❑ On some clutch master cylinders, it is pulled out on the side

6 - Seal/O-Ring

- ❑ Install on the line connection
- ❑ Install with brake fluid
- ❑ Seals/O-rings suitable for the line connection version. Refer to ⇒ Fig. ""Sealing Rings/ O-Rings for Hose/Line Assembly or Pipe"" , page 45
- ❑ Allocation. Refer to the Parts Catalog.

7 - Support

- ❑ To remove and install, disconnect the clutch master cylinder from the clutch pedal. Refer to ⇒ "1.4 Clutch Pedal, Removing and Installing", page 29 .

8 - Clutch Pedal

- ❑ Removing and installing. Refer to ⇒ "1.4 Clutch Pedal, Removing and Installing", page 29 .

9 - Hex Nut

- ❑ 25 Nm
- ❑ Self-locking
- ❑ Quantity: 3
- ❑ For the mounting bracket to the bulkhead
- ❑ Replace after removing

10 - Hose/Line Assembly

- ❑ Allocation. Refer to the Parts Catalog.
- ❑ To remove, remove the battery and battery tray. Refer to ⇒ Electrical Equipment; Rep. Gr. 27 ; Battery; Battery, Removing and Installing .
- ❑ Removing and installing. Refer to ⇒ "2.3 Hose/Line Assembly or Pipe, Removing and Installing", page 53 .

11 - Bracket

- ❑ For hose/line assembly -item 10- ⇒ Item 10 (page 44)

Volkswagen AG. Volkswagen AG does not guarantee or accept any liability with respect to the correctness of information in this document. Copyright by Volkswagen AG. Protected by copyright. Copying for private or commercial purposes, in part or in whole, is not permitted unless authorised.

- ❑ Attached to the body
- ❑ Covered by the assembly mounting
- ❑ Bracket differentiation. Refer to ⇒ Fig. ""Bracket Differentiation"" , page 46

12 - Line

- ❑ Allocation. Refer to the Parts Catalog.
- ❑ To remove, remove the battery and battery tray. Refer to ⇒ Electrical Equipment; Rep. Gr. 27 ; Battery; Battery, Removing and Installing .
- ❑ Removing and installing. Refer to ⇒ "2.3 Hose/Line Assembly or Pipe, Removing and Installing", page 53 .

13 - Bracket

- ❑ For the pipe -item 12- ⇒ Item 12 (page 45)
- ❑ Attached to the body
- ❑ Covered by the assembly mounting
- ❑ Bracket differentiation. Refer to ⇒ Fig. ""Bracket Differentiation"" , page 46

14 - Seal/O-Ring

- ❑ Install on the line connection
- ❑ Install with brake fluid
- ❑ Seals/O-rings suitable for the line connection version. Refer to ⇒ Fig. ""Sealing Rings/O-Rings for Hose/Line Assembly or Pipe"" , page 45
- ❑ Allocation. Refer to the Parts Catalog.

15 - Bleeder

- ❑ Removing and installing. Refer to ⇒ "2.1 Line Assembly and Bleeder on the Clutch Slave Cylinder, Removing and Installing", page 52 .

16 - Clamp

- ❑ To remove and install the hose/line assembly or pipe and the bleeder, pull the clip all the way out.

17 - Breather Valve

- ❑ Bleed clutch mechanism. Refer to ⇒ "1.10 Clutch Mechanism, Bleeding", page 48 .

18 - Dust Cap

19 - Clutch Slave Cylinder

- ❑ The gasket can only be replaced when the transmission is removed.
- ❑ Removing and installing. Refer to ⇒ "2.2 Clutch Slave Cylinder with Release Bearing, Removing and Installing", page 52 .

20 - Transmission

Sealing Rings/O-Rings for Hose/Line Assembly or Pipe

Item	Line Connection Version
1	Line connection with a groove all the way around -arrow 1-
2	Line connection with a shoulder -arrow 2-
3	Line connection with a shoulder -arrow 2- and with a groove all the way around -arrow 3-

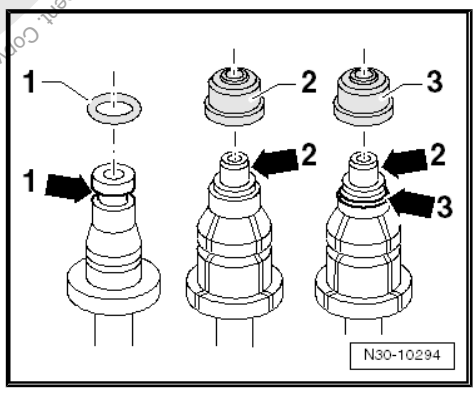

Volkswagen AG. Volkswagen AG does not guarantee or accept any liability with respect to the correctness of information in this document. Copyright by Volkswagen AG.

Plastic Hose -1-

- The seals -2- must be inside the hose.

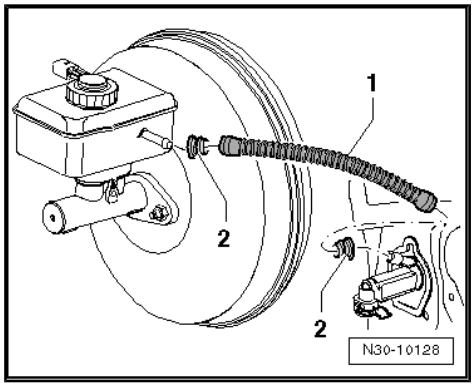

Bracket Differentiation

Dimension “a” mm	Line Version
8	Line
6	Hose/Line Assembly

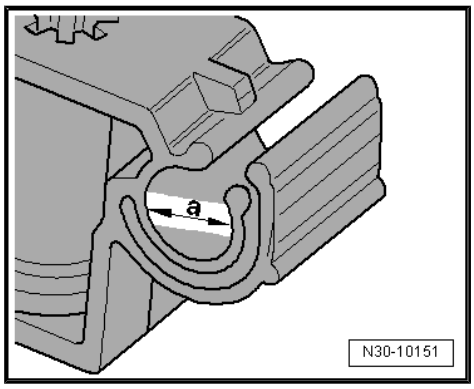

1.9 Overview - Hydraulics, RHD

Protected by copyright. Copying for private or commercial purposes, in part or in whole, is not permitted unless authorised by Volkswagen AG. Volkswagen AG does not guarantee or accept any liability with respect to the correctness of information in this document. Copyright by Volkswagen AG.

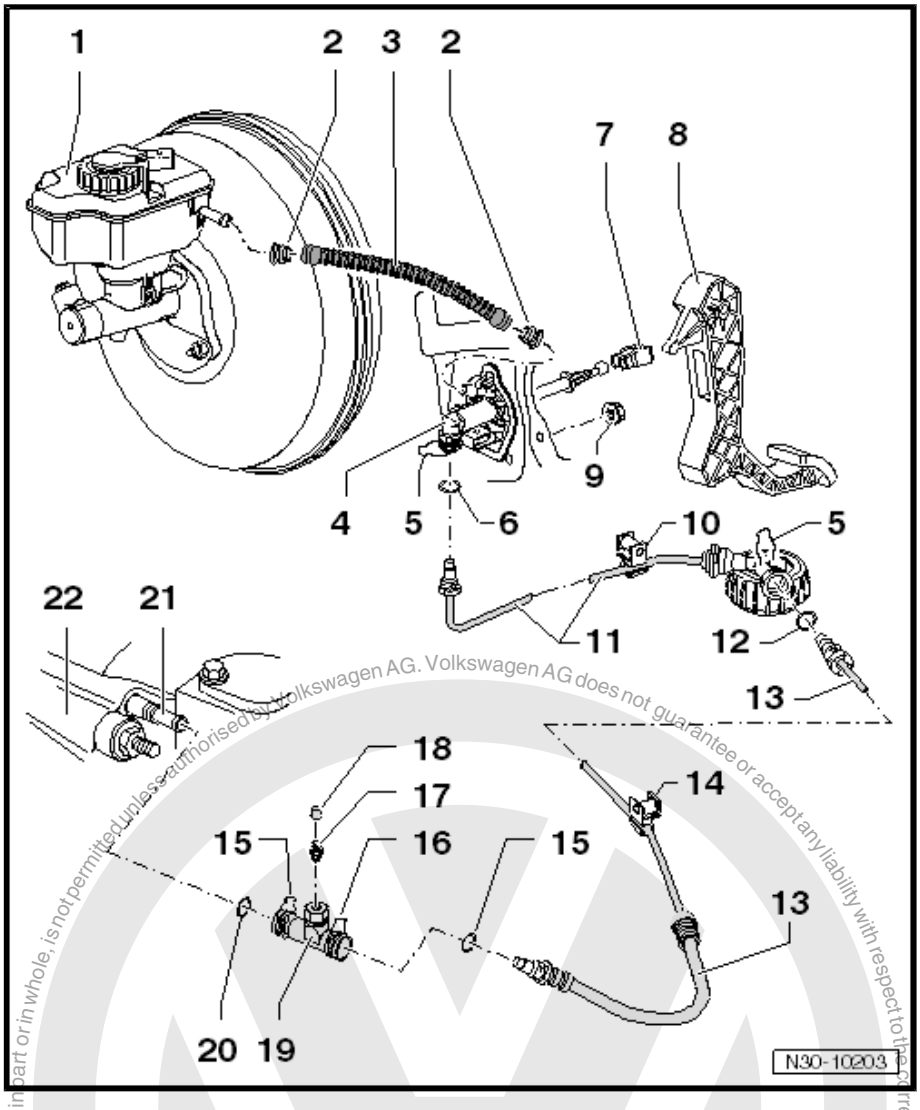

1 - Brake Fluid Reservoir

2 - Seal

- ❑ For the plastic hose
- ❑ The seals must be inside the hose.

3 - Hose

- ❑ Made of plastic. Refer to ⇒ Fig. ""Plastic Hose -1- "", page 46
- ❑ May also be made of rubber

4 - Clutch Master Cylinder

- ❑ Removing and installing. Refer to ⇒ "1.6 Clutch Master Cylinder, Removing and Installing", page 40 .

5 - Clamp

- ❑ To remove and install the line, remove the clip up to the stop
- ❑ On some clutch master cylinders, it is pulled out on the side

6 - Seal/O-Ring

- ❑ Install on the line connection
- ❑ Install with brake fluid
- ❑ Seals/O-rings suitable for the line connection version. Refer to ⇒ Fig. ""Sealing Rings/ O-Rings for Hose/Line Assembly or Pipe"", page 45
- ❑ Allocation. Refer to the Parts Catalog.

7 - Support

- ❑ To remove and install, disconnect the clutch master cylinder from the clutch pedal. Refer to ⇒ "1.4 Clutch Pedal, Removing and Installing", page 29 .

8 - Clutch Pedal

- ❑ Removing and installing. Refer to ⇒ "1.4 Clutch Pedal, Removing and Installing", page 29 .

9 - Hex Nut, 25 Nm

- ❑ Self-locking
- ❑ Quantity: 3
- ❑ For the mounting bracket to the bulkhead
- ❑ Replace after removing

10 - Bracket

- ❑ Attached to the body
- ❑ covered by the assembly mounting

11 - Line

- ❑ The pipe line and pipe/hose line -item 13- ⇒ Item 13 (page 48) may also be a single piece.
- ❑ Removing and installing. Refer to ⇒ "2.3 Hose/Line Assembly or Pipe, Removing and Installing", page 53 .
- ❑ Allocation. Refer to the Parts Catalog.

Protected by copyright. Copying for private or commercial purposes, in part or in whole, is not permitted unless authorised by Volkswagen AG. Volkswagen AG does not guarantee or accept any liability with respect to the correctness of information in this document. Copyright by Volkswagen AG.

- ❑ To remove, remove the battery and battery tray. Refer to ⇒ Electrical Equipment; Rep. Gr. 27 ; Battery; Battery, Removing and Installing .

12 - Seal/O-Ring

- ❑ Install on the line connection
- ❑ Install with brake fluid
- ❑ Seals/O-rings suitable for the line connection version. Refer to
  ⇒ Fig. ""Sealing Rings/O-Rings for Hose/Line Assembly or Pipe"" , page 45
- ❑ Allocation. Refer to the Parts Catalog.

13 - Hose/Line Assembly

- ❑ The pipe line and pipe/hose line -item 11- ⇒ Item 11 (page 47) may also be a single piece.
- ❑ Removing and installing. Refer to
  ⇒ "2.3 Hose/Line Assembly or Pipe, Removing and Installing", page 53 .
- ❑ Allocation. Refer to the Parts Catalog.
- ❑ To remove, remove the battery and battery tray. Refer to ⇒ Electrical Equipment; Rep. Gr. 27 ; Battery; Battery, Removing and Installing .

14 - Bracket

- ❑ Attached to the body

15 - Seal/O-Ring

- ❑ Install on the line connection
- ❑ Install with brake fluid
- ❑ Seals/O-rings suitable for the line connection material. Refer to
  ⇒ Fig. ""Sealing Rings/O-Rings for Hose/Line Assembly or Pipe"" , page 45
- ❑ Allocation. Refer to the Parts Catalog.

16 - Clamp

- ❑ To remove and install the hose/line assembly or bleeder, pull the clip all the way out.

17 - Breather Valve

- ❑ Bleed clutch mechanism. Refer to ⇒ "1.10 Clutch Mechanism, Bleeding", page 48 .

18 - Dust Cap

19 - Bleeder

- ❑ Removing and installing. Refer to
  ⇒ "2.1 Line Assembly and Bleeder on the Clutch Slave Cylinder, Removing and Installing", page 52 .

20 - Seal/O-Ring

- ❑ Install on the line connection
- ❑ Install with brake fluid
- ❑ Seals/O-rings suitable for the line connection material
  ⇒ Fig. ""Sealing Rings/O-Rings for Hose/Line Assembly or Pipe"" , page 45
- ❑ Allocation. Refer to the Parts Catalog.

21 - Clutch Slave Cylinder

- ❑ The gasket can only be replaced when the transmission is removed.
- ❑ Removing and installing. Refer to
  ⇒ "2.2 Clutch Slave Cylinder with Release Bearing, Removing and Installing", page 52 .

22 - Transmission

1.10 Clutch Mechanism, Bleeding

Special tools and workshop equipment required

- ♦ Brake Charger/Bleeder Unit - VAS5234-

Copyright by Volkswagen AG. Copyright. Copying for private or commercial purposes, in part or in whole, is not permitted unless authorised by Volkswagen AG. Volkswagen AG does not guarantee or accept any liability with respect to the correctness of information in this document.

Note

It is not necessary to pre-fill the system.

Brake fluid specification. Refer to ⇒ Brake System; Rep. Gr. 47 ; Hydraulic System .

– Remove entire air filter housing if it is located near the battery. Refer to ⇒ Rep. Gr. 23 ; Diesel Direct Injection System; Air Filter Housing, Removing and Installing or ⇒ Rep. Gr. 24 ; Air Filter; Air Filter Housing, Removing and Installing .

– Connect the Brake Charger/Bleeder Unit - VAS5234- .

It is necessary to use the Bleeder Hose (670 mm) - VAG1238/B3- to bleed.

– Connect the bleeder hose to the brake bleeder unit collector bottle.

– Connect bleeder hose -A- to bleeder -arrow-.

– Apply 2.0 bar (29 psi) pressure to the system.

– Open the breather valve approximately 1/4 to 1/2 turn.

– Move the clutch pedal 15 to 20 times rapidly by hand from stop to stop.

– Close breather valve and switch bleeder device off.

– After completing the bleeding procedure, and the pressure has dropped from 2.0 bar (29 psi), operate the clutch pedal an additional 10 times by foot.

– If it was removed earlier install the complete air filter housing. Refer to ⇒ Rep. Gr. 23 ; Diesel Direct Injection System; Air Filter Housing, Removing and Installing or ⇒ Rep. Gr. 24 ; Air Filter; Air Filter Housing, Removing and Installing .

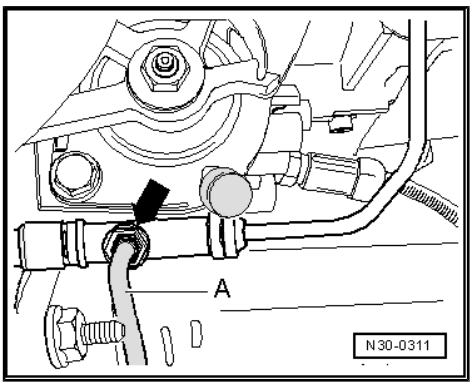

Protected by copyright. Copying for private or commercial purposes, in part or in whole, is not permitted unless authorised by Volkswagen AG. Volkswagen AG does not guarantee or accept any liability with respect to the correctness of information in this document. Copyright by Volkswagen AG.

2 Clutch Release Mechanism, Servicing

⇒ “2.1 Line Assembly and Bleeder on the Clutch Slave Cylinder, Removing and Installing”, page 52

⇒ “2.2 Clutch Slave Cylinder with Release Bearing, Removing and Installing”, page 52

⇒ “2.3 Hose/Line Assembly or Pipe, Removing and Installing”, page 53

⇒ “2.4 Input Shaft Seal, Replacing”, page 55

Special tools and workshop equipment required

- Torque Wrench 1331 5-50Nm - VAG1331-

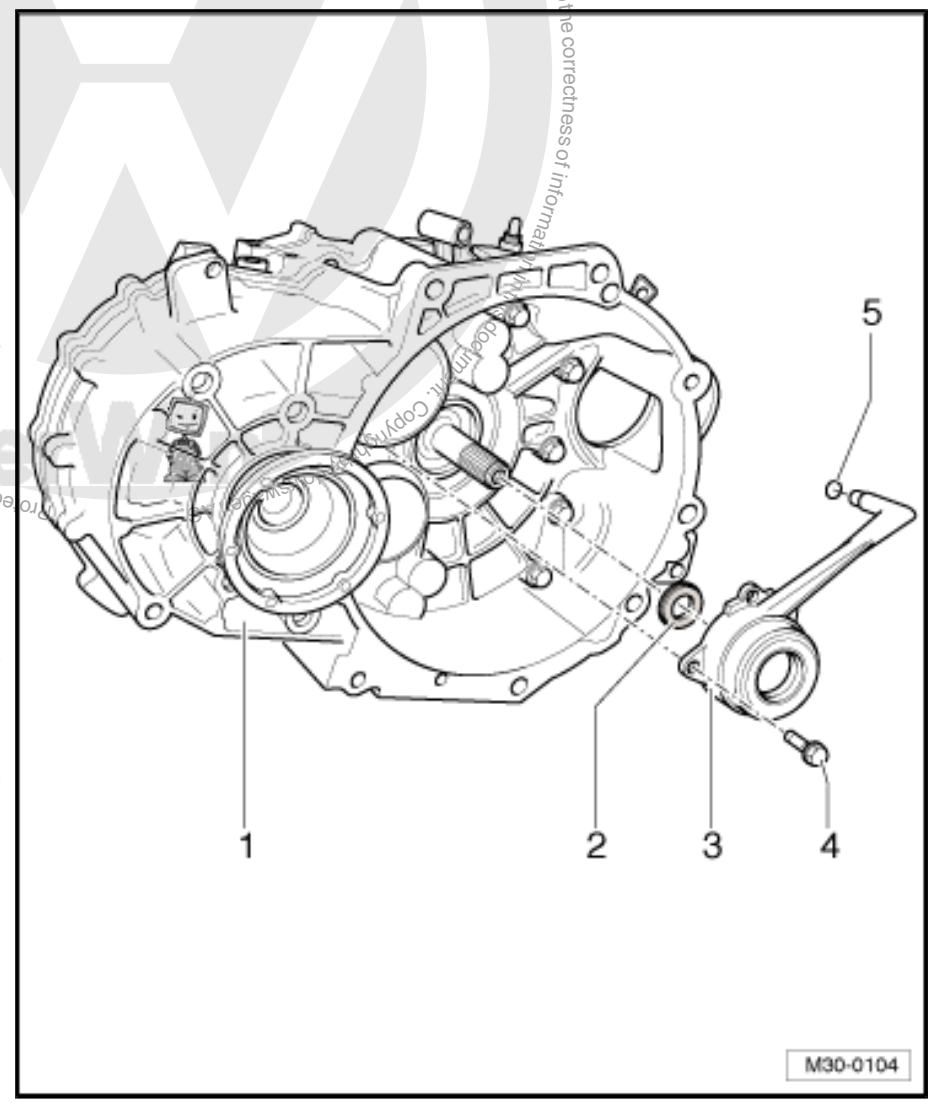

1 - Transmission

2 - Input Shaft Seal

- Replacing. Refer to ⇒ “2.4 Input Shaft Seal, Replacing”, page 55 .

3 - Clutch Slave Cylinder with Release Bearing

- Must be replaced together because they are a single unit
- Do not wash the bearing, just wipe it off.
- Replace any loud bearings together with the clutch slave cylinder
- Some clutch slave cylinders have a divided feed line. Refer to ⇒ Fig. ““Clutch Slave Cylinder -A- with Divided Supply Line”“ , page 51
- Removing and installing. Refer to ⇒ “2.2 Clutch Slave Cylinder with Release Bearing, Removing and Installing”, page 52 .
- Approximately from 05/2011: release bearing with an additional plastic washer. Refer to ⇒ Fig. ““Approximately from 05/2011: Release Bearing with an Additional Plastic Washer”“ , page 51 , pressure plate is adapted ⇒ Fig. ““Only for Release Bearing with Additional Plastic Washer: Pressure Plate Diaphragm Spring (-arrows-) with A Slightly Lower Installation Height.”“ , page 51
- Allocation. Refer to the Parts Catalog.

4 - Bolt

- Quantity: 3
- Replace after removing

- ❑ Without locking compound 12 Nm (clutch slave cylinder with metal housing only)
- ❑ With locking fluid 15 Nm (for plastic clutch slave cylinders)
- ❑ carefully tighten diagonally in small stages so that clutch slave cylinder bolting eyelets do not break off

Note

Pay attention to the thread pitch on the bolt when cleaning the threaded hole in the clutch housing.

5 - O-Ring

- ❑ Install on the line connection
- ❑ Install with brake fluid
- ❑ Allocation. Refer to the Parts Catalog.

Clutch Slave Cylinder -A- with Divided Supply Line

The supply line is divided in area with -arrows- on some clutch slave cylinders

Allocation. Refer to the Parts Catalog.

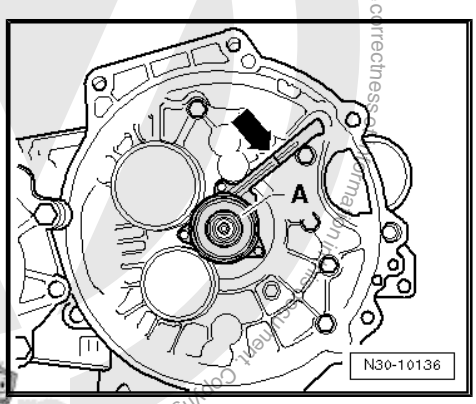

Approximately from 05/2011: Release Bearing with an Additional Plastic Washer

Identified by: tabs -arrow- on the plastic washer.

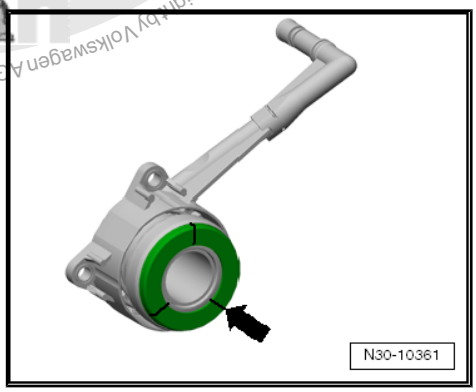

Only for Release Bearing with Additional Plastic Washer: Pressure Plate Diaphragm Spring (-arrows-) with A Slightly Lower Installation Height.

- Only install the adapted release bearing and the adapted pressure plate together.

Allocation. Refer to the Parts Catalog.

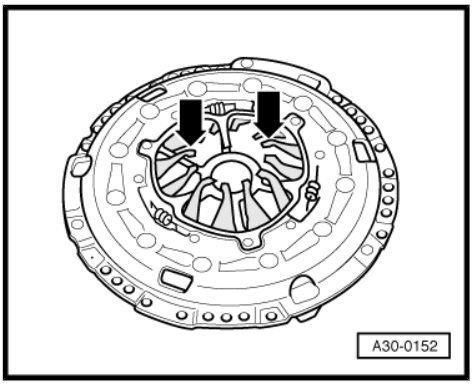

Protected by copyright. Copying for private or commercial purposes, in part or in whole, is not permitted unless authorised by Volkswagen AG. Volkswagen AG does not guarantee or accept any liability with respect to the correctness of information. Copyright by Volkswagen AG.

2.1 Line Assembly and Bleeder on the Clutch Slave Cylinder, Removing and Installing

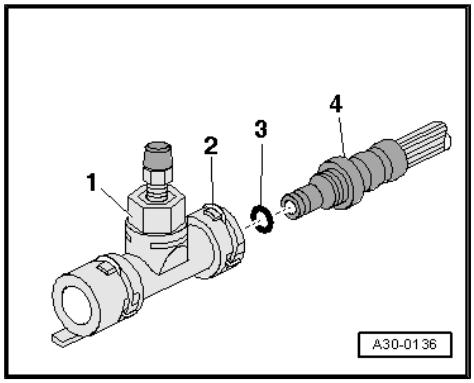

Attaching and Removing the Hose/Line Assembly and the Pipe to or from the Bleeder

– To remove, open the clip -2- with a screwdriver or a pointed tool and pull off hose/line assembly or pipe -4- at the bleeder -1-.

– To install, press hose/line assembly or pipe with the new O-ring -3- into connection of bleeder, until clip audibly engages.

– Pull on the line to make sure it is secure.

Bleeder at Clutch Slave Cylinder, Removing and Installing

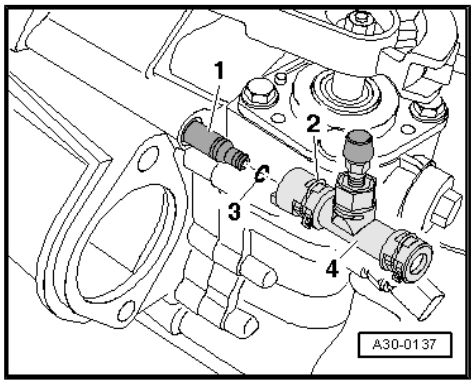

– To remove, open the clip -2- with a screwdriver or a pointed tool and remove bleeder -4- from clutch slave cylinder -1-.

– To install, check the O-ring -3- on the clutch slave cylinder. Press in bleeder at clutch slave cylinder connector until clip engages audibly.

– To check, pull on the bleeder.

– Bleed the clutch mechanism. Refer to ⇒ “1.10 Clutch Mechanism, Bleeding”, page 48 .

2.2 Clutch Slave Cylinder with Release Bearing, Removing and Installing

Note

The clutch slave cylinder and the release bearing are a single unit and are replaced together.

Removing

• Remove the transmission.

– Open the clip -2- with a screwdriver or a pointed tool and remove bleeder -4- from clutch slave cylinder -1-.

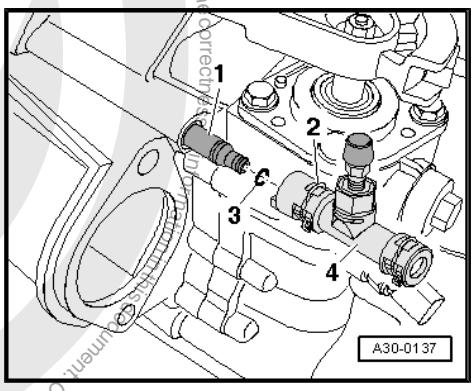

Protected by copyright. Copying for private or commercial purposes, in part or in whole, is not permitted unless authorised by Volkswagen AG. Volkswagen AG does not guarantee or accept any liability with respect to the correctness of information. Copyright by Volkswagen AG.

– Remove the bolts -arrows-.

– Remove the clutch slave cylinder and the release bearing -A-.

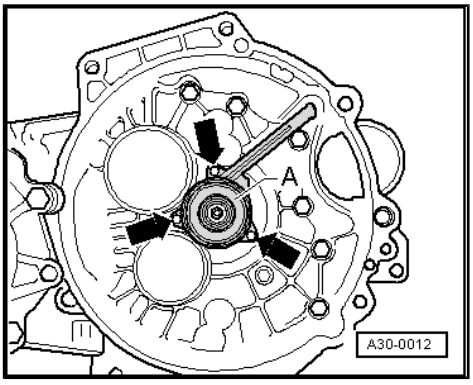

Installing

Install in reverse order of removal while. Note the following:

• Tighten the slave cylinder bolts in small increments only.

Otherwise, there is the danger that the tabs with the fastening holes could break off.

– Fasten the clutch slave cylinder with release bearing -item 4- ⇒ Item 4 (page 50) .

.

– Check the O-ring -3- on the clutch slave cylinder for damage.

– Install the bleeder -4- on the connection on the clutch slave cylinder -1- until the clip -2- clicks into the place.

– To check, pull on the bleeder.

• Install the transmission.

– Bleed the clutch mechanism. Refer to ⇒ “1.10 Clutch Mechanism, Bleeding”, page 48 .

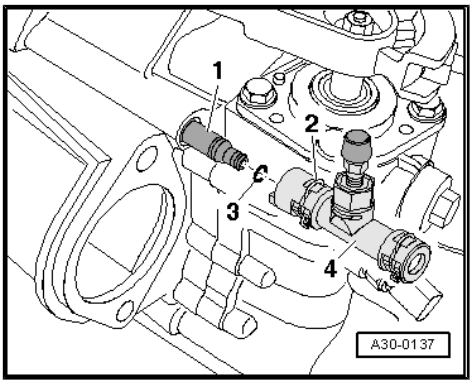

2.3 Hose/Line Assembly or Pipe, Removing and Installing

Special tools and workshop equipment required

♦ Hose Clamps - Up To 25 mm - 3094-

Removing

– Removed the complete air filter housing. Refer to ⇒ Rep. Gr. 23 ; Diesel Direct Injection System; Air Filter Housing, Removing and Installing or ⇒ Rep. Gr. 24 ; Air Filter; Air Filter Housing, Removing and Installing .

Note

While performing the following work, make sure no brake fluid comes into contact with the longitudinal member or the transmission. If it does, clean the area thoroughly.

– Clamp the clutch master cylinder hose using a Hose Clamps - Up To 25mm - 3094- .

Remove the hose/line assembly or pipe from the clutch master cylinder as follows:

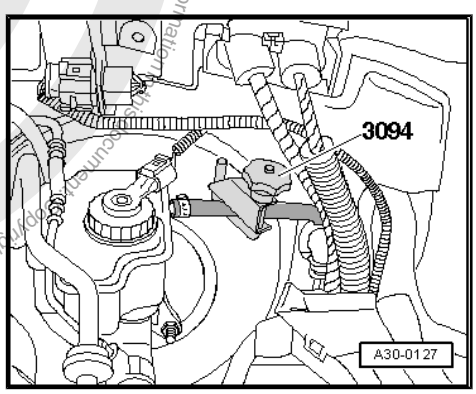

Protected by copyright. Copying for private or commercial purposes, in part or in whole, is not permitted unless authorised by Volkswagen AG. Volkswagen AG does not guarantee or accept any liability with respect to the correctness of information in this document. Copyright by Volkswagen AG.

– Open the circlip -3- with a screwdriver and remove the line -1- and O-ring -2-.

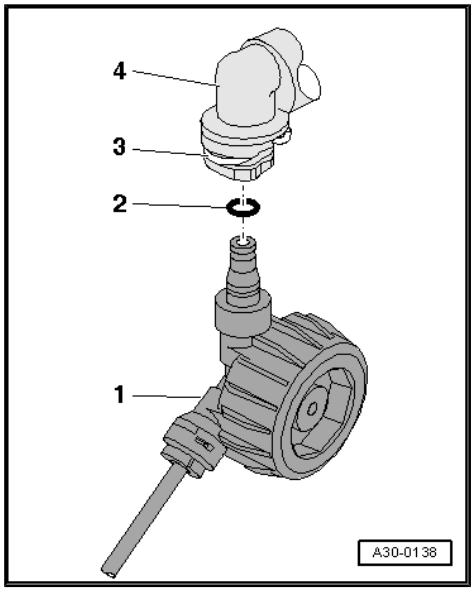

> **Caution**
>
> *Do not press the clutch pedal after removing the line.*

Remove the hose/line assembly or pipe from the bleeder as follows:

– Remove the circlip -2- with a screwdriver or a pointed tool and remove the line -4- with O-ring -3- from the bleeder -1-.

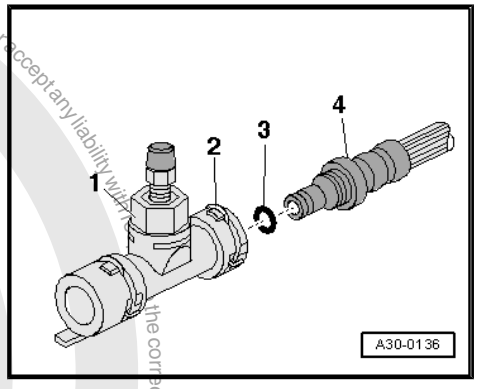

Installing

Install in reverse order of removal while. Note the following:

– Install the hose/line assembly and pipe line -1- with the O-ring -2- on the clutch master cylinder connection -4- until the clip -3- audibly engages.

– Pull on the line to make sure it is secure.

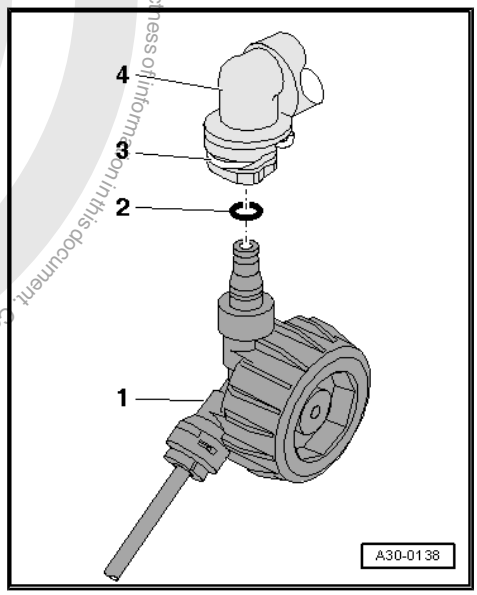

Protected by copyright. Copying for private or commercial purposes, in part or in whole, is not permitted unless authorised by Volkswagen AG. Volkswagen AG does not guarantee or accept any liability with respect to the correctness of information in this document. Copyright by Volkswagen AG.

– Press the line with O-ring -3- on the bleeder connection until the secure clip engages.

– Pull on the line to make sure it is secure.

– After removing the Hose Clamps - Up To 25mm - 3094- , bring the return hose back to its original shape.

– Bleed the clutch mechanism. Refer to
⇒ “1.10 Clutch Mechanism, Bleeding”, page 48 .

– Install the complete air filter housing. Refer to ⇒ Rep. Gr. 23 ; Diesel Direct Injection System; Air Filter Housing, Removing and Installing or ⇒ Rep. Gr. 24 ; Air Filter; Air Filter Housing, Removing and Installing .

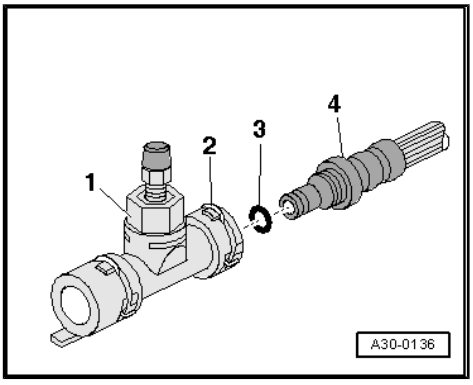

2.4 Input Shaft Seal, Replacing

Special tools and workshop equipment required

- Puller - Crankshaft/Power Steering Seal - 1 - T20143/1-
- Seal Installer - Driveshaft - T40008-
- Sealing Grease - G 052 128 A1-

Procedure

- Remove the transmission.

– Remove the clutch slave cylinder and the release bearing. Refer to
⇒ “2.2 Clutch Slave Cylinder with Release Bearing, Removing and Installing”, page 52 .

– Pry out input shaft seal using Puller - Crankshaft/Power Steering Seal - 1 - T20143/1- .

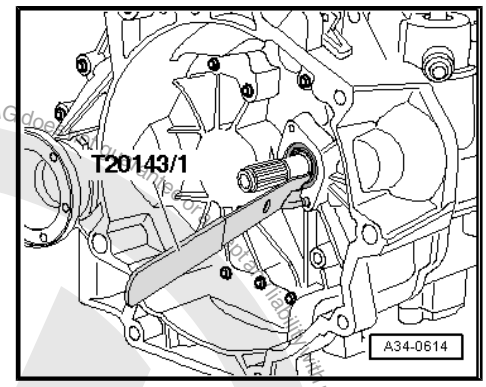

Note

Be careful not to damage the contact surface for the seal on the input shaft.

– Fill the space between the sealing and dust lip -arrow- halfway with Sealing Grease - G 052 128 A1- .

– Lightly coat the outer circumference of the seal with transmission fluid.

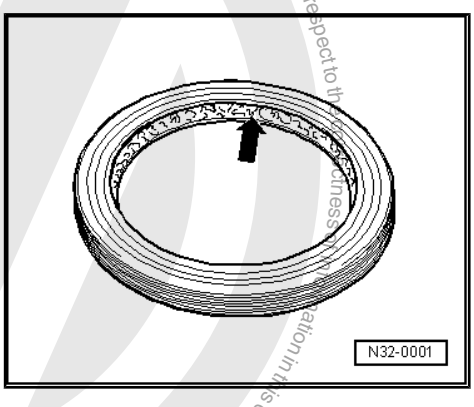

Protected by copyright. Copying for private or commercial purposes, in part or in whole, is not permitted unless authorised by Volkswagen AG. Volkswagen AG does not guarantee or accept any liability with respect to the correctness of information in this document. Copyright by Volkswagen AG.

– Drive in the seal using the Seal Installer - Driveshaft - T40008- until it is flush.

– Install the clutch slave cylinder and the release bearing. Refer to
⇒ “2.2 Clutch Slave Cylinder with Release Bearing, Removing and Installing”, page 52 .

• Install the transmission.

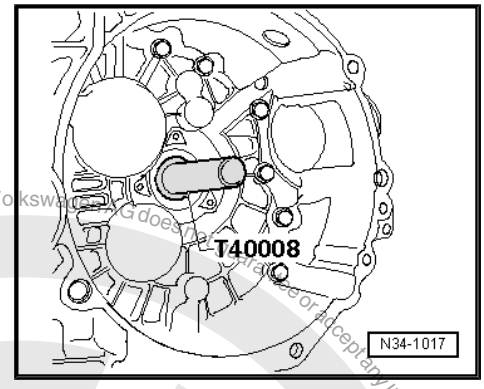

Protected by copyright. Copying for private or commercial purposes, in part or in whole, is not permitted unless authorised by Volkswagen AG. Volkswagen AG does not guarantee or accept any liability with respect to the correctness of information in this document. Copyright by Volkswagen AG.

3 Clutch, Servicing, Diesel

⇒ “3.1 Determining Clutch Manufacturer”, page 57

⇒ “3.2 Sachs Clutch, Removing and Installing”, page 58

⇒ “3.3 Clutch, Servicing, Sachs ”, page 61

⇒ “3.4 LuK Clutch, Removing and Installing”, page 62

⇒ “3.5 Clutch, Servicing, LuK ”, page 65

Special tools and workshop equipment required

- Flywheel Retainer - 3067-
- Alignment Tool - Clutch Plate - T10097-
- Torque Wrench 1331 5-50Nm - VAG1331-
- Grease for Clutch Disc Shaft Splines - G 000 100-
- On engines which have a crankshaft with a smaller diameter, or engines with a needle bearing in the crankshaft. Refer to ⇒ Fig. ““Centering the Clutch Disc, Removing and Installing the Pressure Plate on Engines with A Crankshaft with A Smaller Diameter, or Engines with A Needle Bearing in the Crankshaft.”“ , page 61 Alignment Tool - Clutch Plate - 3176- .

3.1 Determining Clutch Manufacturer

Either a “Sachs” or a “LuK” clutch may be installed.

It is possible to tell which clutch the vehicle has with the transmission installed:

– Remove the noise insulation. Refer to ⇒ Body Exterior; Rep. Gr. 50 ; Noise Insulation .

– Remove the noise insulation from the oil pan if necessary.

There are some openings -arrows- between the engine -A- and the transmission -B- near the bottom of the oil pan.

– Check the outer contour of the flywheel through this opening.

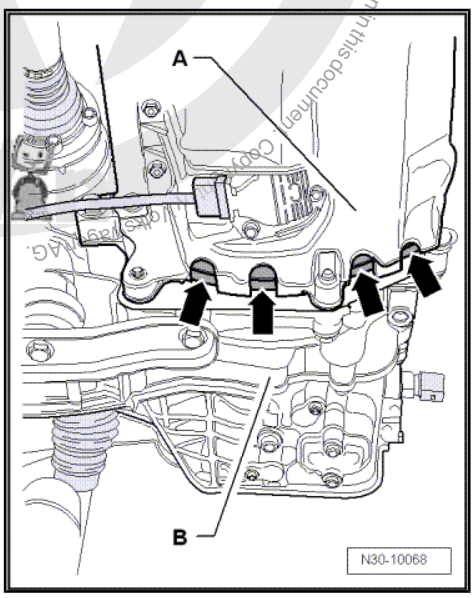

Protected by copyright. Copying for private or commercial purposes, in part or in whole, is not permitted unless authorised by Volkswagen AG. Volkswagen AG does not guarantee or accept any liability with respect to the correctness of information in this document. Copyright by Volkswagen AG.

– The outer contour of the flywheel can also be inspected by removing -arrows- the small cover plate -A-.

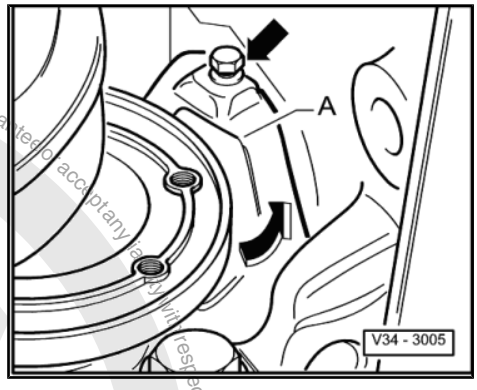

Round Outer Contour -arrows- = Clutch Made by Sachs = -A-

– Clutch, removing and installing, Sachs. Refer to ⇒ “3.2 Sachs Clutch, Removing and Installing”, page 58 .

– Sachs clutch, servicing. Refer to ⇒ “3.3 Clutch, Servicing, Sachs ”, page 61 .

Squared Outer Contour -arrows 1- and in Addition, A Pleat All the Way Around -arrow 2- = Clutch Made by LuK = -B-

or

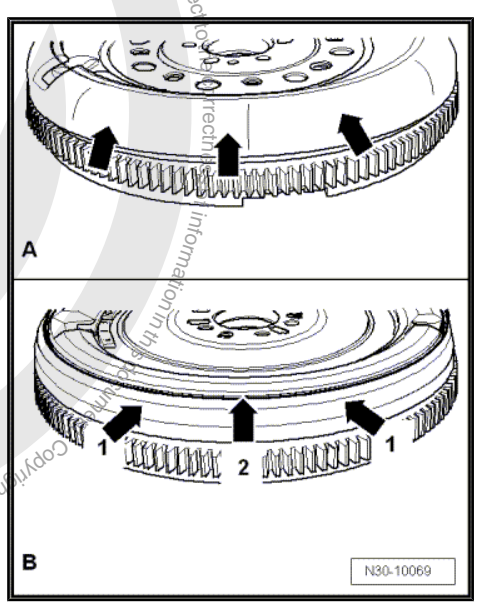

Round Outer Contour -arrows 1- and A Circulated Depression -arrow 2- = Clutch Manufacturer, LuK = -B-

– LuK clutch, removing and installing. Refer to ⇒ “3.4 LuK Clutch, Removing and Installing”, page 62 .

– LuK clutch, servicing. Refer to ⇒ “3.5 Clutch, Servicing, LuK ”, page 65 .

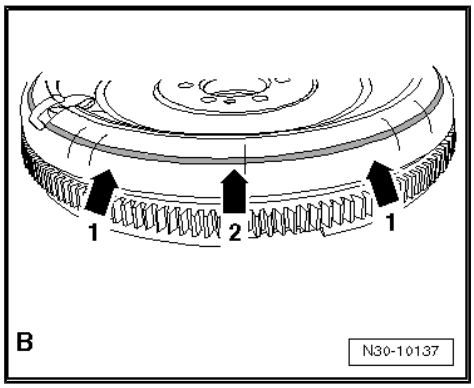

3.2 “Sachs” Clutch, Removing and Installing

Removing

– Remove the transmission.

– Insert Flywheel Retainer - 3067- to loosen the bolts.

Protected by copyright. Copying for private or commercial purposes, in part or in whole, is not permitted unless authorised by Volkswagen AG. Volkswagen AG does not guarantee or accept any liability with respect to the correctness of information in this repair manual. Copyright by Volkswagen AG.

– Loosen the bolt diagonally in small steps.

• When loosening, the stop -2- and the bolt -1- must loosen up together.

– If the stop does not loosen: push the bolt toward the dual mass flywheel.

– Remove the pressure plate and the clutch plate.

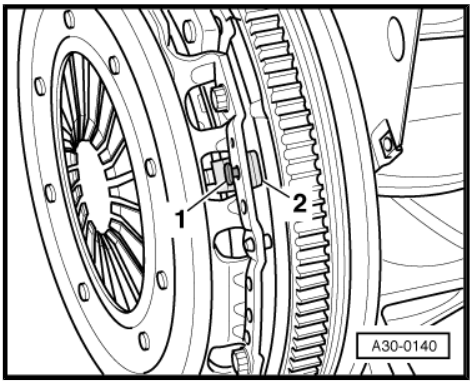

Installing

Install in reverse order of removal while. Note the following:

Note

♦ *Allocate thrust plate and clutch disc according to the engine code. Refer to the Parts Catalog.*

♦ *Check whether there are centering sleeves for the engine/ transmission in the cylinder block; install if necessary.*

♦ *If the alignment sleeves are missing, it will be difficult to shift, there will be clutch problems and the transmission may make noises (loose rattling).*

Clutch Plate Installed Position

• "Transmission side" label and the spring cage face the transmission.

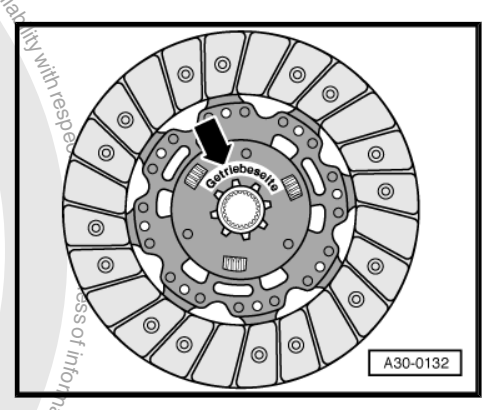

Check the Ends of the Diaphragm Spring

• Wear up to half the thickness of the diaphragm spring -arrows- is permitted.

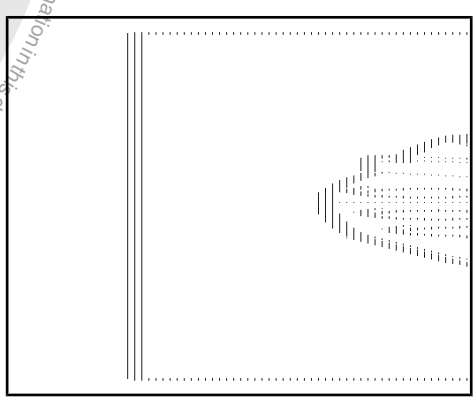

Protected by copyright. Copyright by Volkswagen AG.

Checking the Spring Connections and Rivet Connections

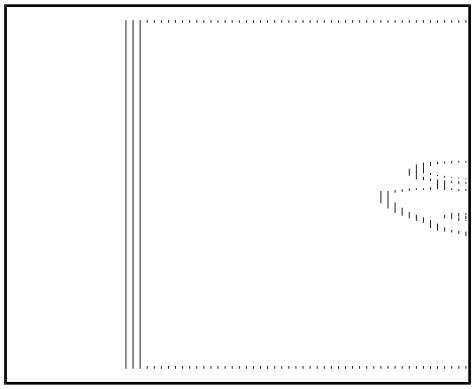

– Check the spring connections between the pressure plate and the cover for cracks and make sure the rivet connections are tight.

• Replace the pressure plate if the spring connections are damaged or if the rivet connections -arrows- are loose.

Note

♦ *Replace clutch plates and pressure plates if the rivets are damaged or loose.*

♦ *Allocate clutch disc and thrust plate using the engine code. Refer to the Parts Catalog.*

♦ *Clean input shaft splines and (on used clutch plates) the hub splines, remove corrosion and apply a very thin coating of Grease for Clutch Disc Shaft Splines - G 000 100- to the splines. Then move the clutch plate back and forth on the input shaft until the hub moves freely on the shaft. Remove any excess grease.*

♦ *The pressure plates are protected from corrosion and lubricated. Only the running surfaces may be cleaned. Otherwise the service life of the clutch will be shortened considerably.*

♦ *The pressure plate contact surface and the clutch plate lining must completely touch the flywheel. Install the bolts.*

– Move the Flywheel Retainer - 3067- during installation.

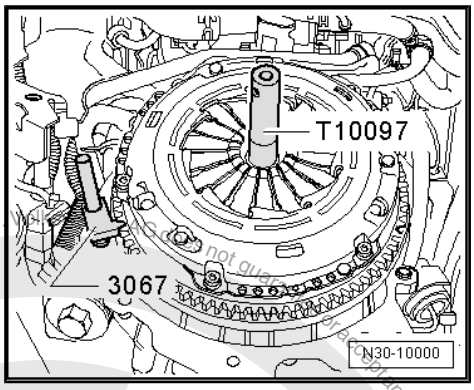

Engines Having A Crankshaft with A Smaller Diameter -arrow-, or Engines Having A Needle Bearing -arrow- in the Crankshaft

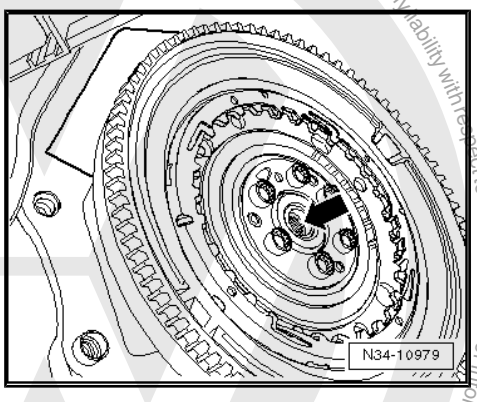

Protected by copyright. Copying for private or commercial purposes, in part or in whole, is not permitted unless authorised by Volkswagen AG. Copyright by Volkswagen AG.

Centering the Clutch Disc, Removing and Installing the Pressure Plate on Engines with A Crankshaft with A Smaller Diameter, or Engines with A Needle Bearing in the Crankshaft.

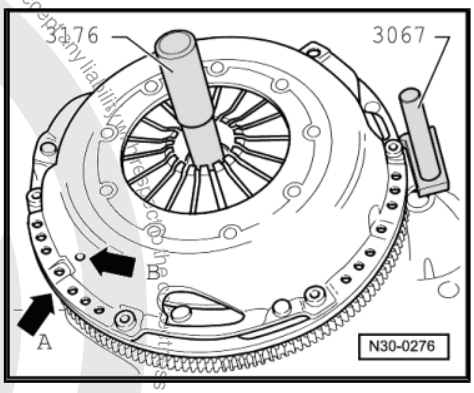

Note

Ignore arrows -A and B-.

Continuation for All

When Installing, Tighten Bolts As Follows So Pressure Plate Does Not Distort (Causing Shuddering on Acceleration):

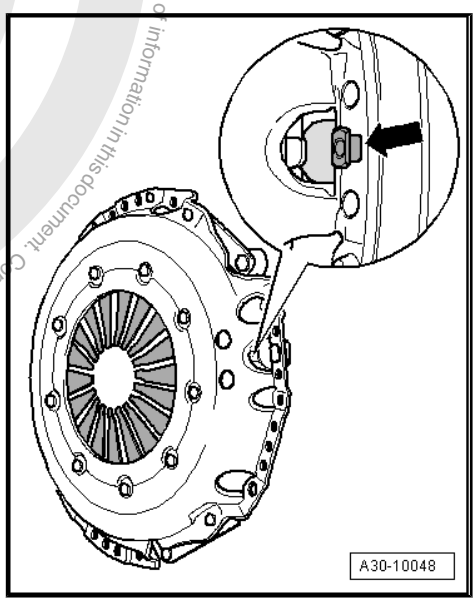

- Make sure the stop pin (position sensor) -arrow- moves easily.
- Position the pressure plate on the centering pins.
- Install all the bolts evenly, by hand, until the bolt heads contact the pressure plate.
- When doing this, the stop pin -arrow- must lift off from the pressure plate.
- Tighten the bolts in small steps and in diagonal sequence to prevent damaging the centering holes of the pressure plate and the centering pins of the dual mass flywheel -item 4- ⇒ Item 4 (page 62) .
- Install the transmission.

3.3 Clutch, Servicing, “Sachs”

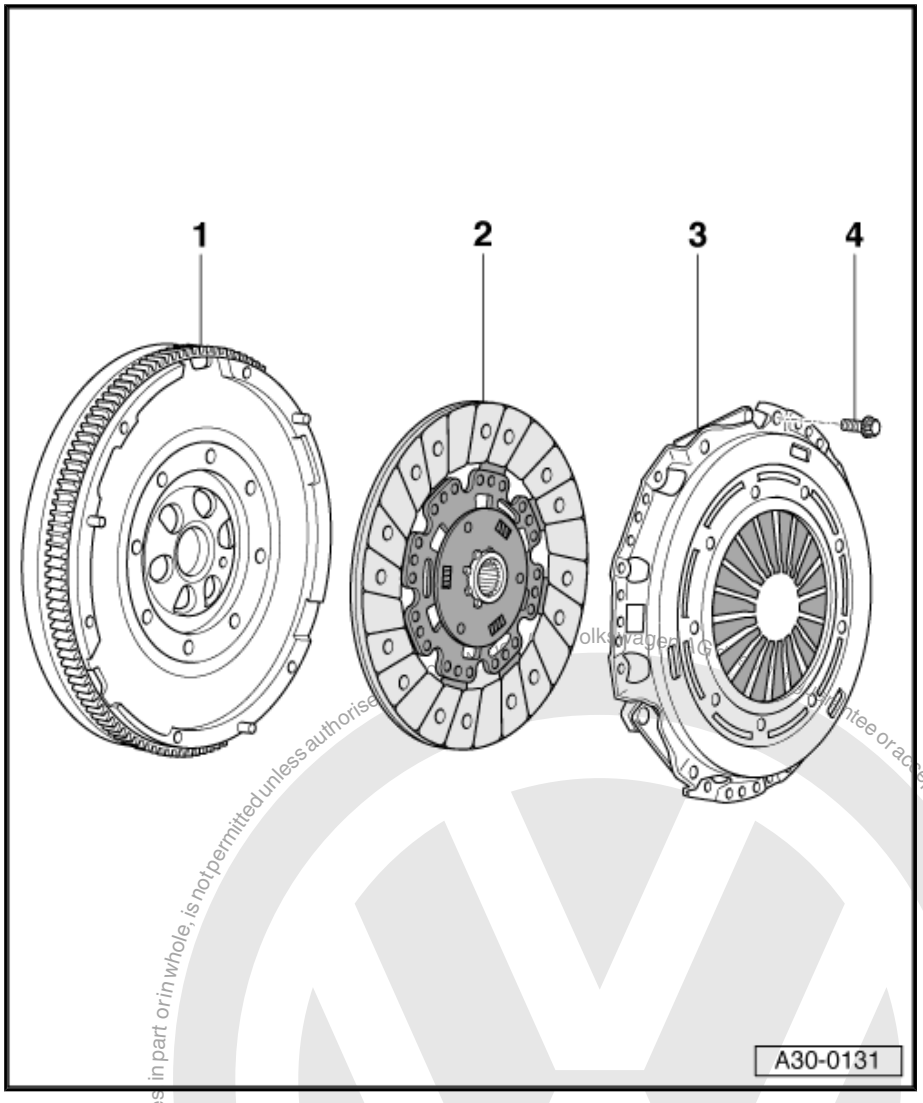

1 - Dual Mass Flywheel

- ❑ Removing and installing. Refer to ⇒ Rep. Gr. 13 .
- ❑ Make sure it fits securely on the centering pins
- ❑ Keep the clutch lining contact surface free of grooves, oil and grease.

2 - Clutch Plate

- ❑ Allocation. Refer to the Parts Catalog.
- ❑ Only replace together with the pressure plate
- ❑ Removing and installing. Refer to ⇒ "3.2 Sachs Clutch, Removing and Installing", page 58 .
- ❑ Installation position. Refer to ⇒ Fig. ""Clutch Plate Installed Position"" , page 59 .

3 - Pressure Plate

- ❑ With adjustment mechanism
- ❑ Allocation. Refer to the Parts Catalog.
- ❑ Only replace together with the clutch plate
- ❑ Removing and installing. Refer to ⇒ "3.2 Sachs Clutch, Removing and Installing", page 58 .
- ❑ Checking the ends of the diaphragm spring. Refer to ⇒ Fig. ""Check the Ends of the Diaphragm Spring"" , page 59
- ❑ Checking the spring connections and rivet connections. Refer to ⇒ Fig. ""Checking the Spring Connections and Rivet Connections"" , page 60

4 - Bolt

- ❑ M6 bolt: 13 Nm
- ❑ M7 bolt: 20 Nm
- ❑ Allocation. Refer to the Parts Catalog.
- ❑ Loosen or tighten in small steps and in diagonal sequence

3.4 "LuK" Clutch, Removing and Installing

Removing

– Remove the transmission.

– Insert Flywheel Retainer - 3067- to loosen the bolts.

– Loosen the bolt diagonally in small steps.

– Remove the pressure plate and the clutch plate.

Protected by copyright. Copying for private or commercial purposes, in part or in whole, is not permitted unless authorised. Copyright by Volkswagen AG. Volkswagen AG does not guarantee or accept any liability with respect to the correctness of information in this document.

Installing

Install in reverse order of removal while. Note the following:

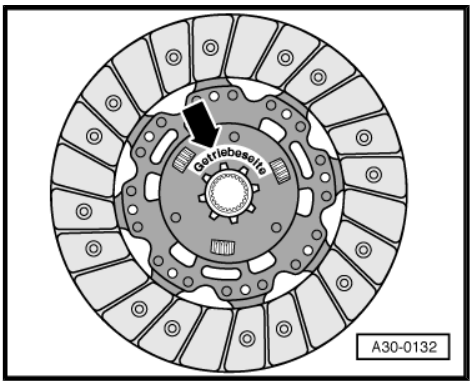

Note

- *Allocate thrust plate and clutch disc according to the engine code. Refer to the Parts Catalog.*
- *Check whether there are centering sleeves for the engine/ transmission in the cylinder block; install if necessary.*
- *If the alignment sleeves are missing, it will be difficult to shift, there will be clutch problems and the transmission may make noises (loose rattling).*

Clutch Plate Installed Position

- “Transmission side” label faces the transmission.

Check the Ends of the Diaphragm Spring

- Wear up to half the thickness of the diaphragm spring -arrows- is permitted.

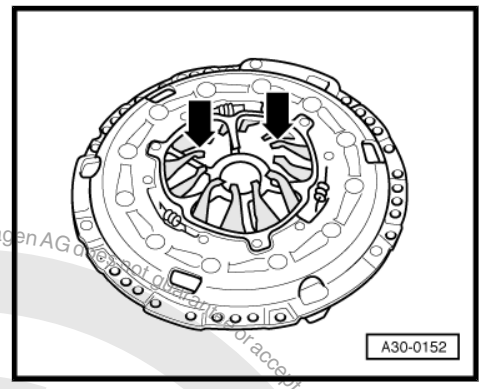

Checking the Spring Connections and Rivet Connections

– Check the spring connections -arrows A- for damage and make sure the rivet connections -arrows B- are tight.

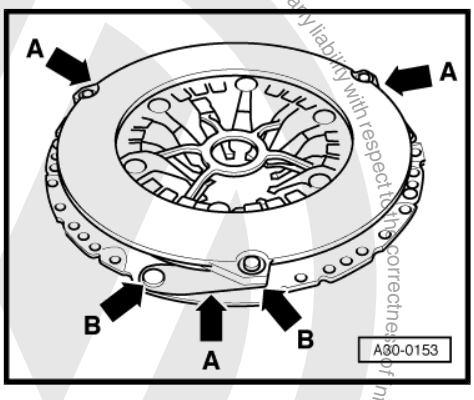

Protected by copyright. Copying for private or commercial purposes, in part or in whole, is not permitted unless authorised by Volkswagen AG. Volkswagen AG does not guarantee or accept any liability with respect to the correctness of information in this document. Copyright by Volkswagen AG.

Only Check Position of Adjustment Mechanism with New Pressure Plates

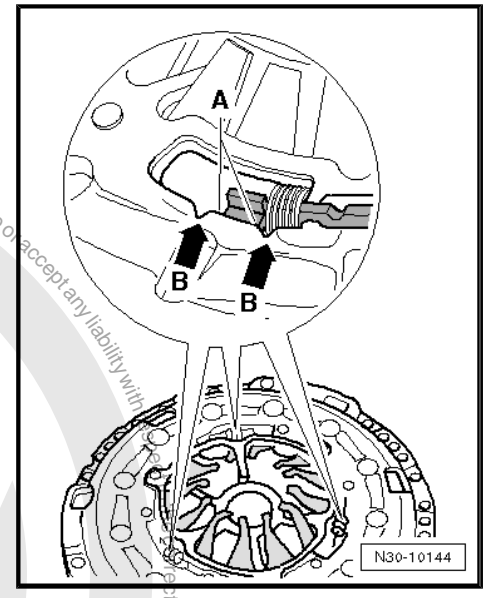

- Both edges -A- of the adjusting ring must be located between both notches -arrows B-.
- If the adjusting ring takes on a different position with new pressure plates, pressure plate and clutch plate must not be installed.
- With used clutches, the adjusting ring may take on a position outside of the notches.

Note

- *Replace clutch plates and pressure plates if the rivets are damaged or loose.*
- *Replace the pressure plate and the clutch plate together.*
- *Allocate clutch disc and thrust plate using the engine code. Refer to the Parts Catalog.*
- *Clean input shaft splines and (on used clutch plates) the hub splines, remove corrosion and apply a very thin coating of Grease for Clutch Disc Shaft Splines - G 000 100- to the splines. Then move the clutch plate back and forth on the input shaft until the hub moves freely on the shaft. Remove any excess grease.*
- *The pressure plates are protected from corrosion and lubricated. Only the running surfaces may be cleaned. Otherwise the service life of the clutch will be shortened considerably.*
- *The pressure plate contact surface and the clutch plate lining must completely touch the flywheel. Install the bolts.*

– Move the Flywheel Retainer - 3067- during installation.

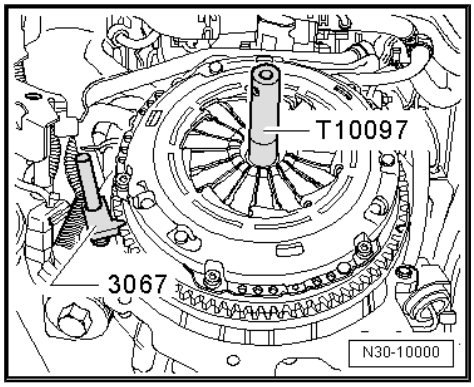

Engines having A Crankshaft with A Smaller Diameter -arrow-, or Engines having A Needle Bearing -arrow- in the Crankshaft

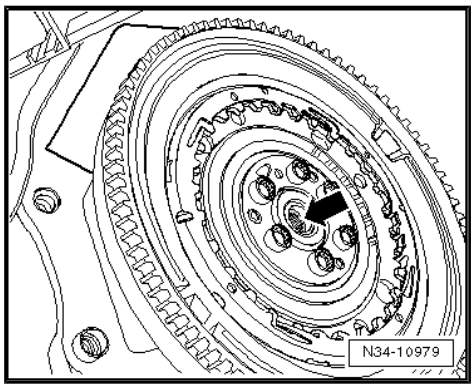

Volkswagen AG. Volkswagen AG does not guarantee or accept any liability with respect to the correctness of information in this document. Copyright by Volkswagen AG. Reproduced by copyright permission only for personal use. Reproduction or transmission of this document or part in any form, is not permitted without authorisation.

Centering the Clutch Disc, Removing and Installing the Pressure Plate on Engines with A Crankshaft with A Smaller Diameter, or Engines with A Needle Bearing in the Crankshaft.

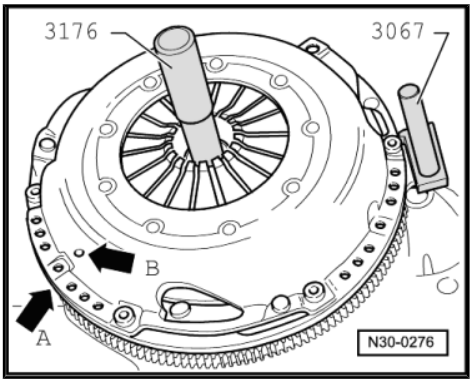

Note

Ignore arrows -A and B-.

Continuation for All

- Position the pressure plate on the centering pins.
- Install all the bolts evenly, by hand, until the bolt heads contact the pressure plate.
- Tighten the bolts in small steps and in diagonal sequence to prevent damaging the centering holes of the pressure plate and the centering pins of the dual mass flywheel -item 4- ⇒ Item 4 (page 66) .
- Install the transmission.

3.5 Clutch, Servicing, “LuK”

1 - Dual Mass Flywheel

- ❑ Removing and installing. Refer to ⇒ Rep. Gr. 13 .
- ❑ Make sure it fits securely on the centering pins
- ❑ Keep the clutch lining contact surface free of grooves, oil and grease.

2 - Clutch Plate

- ❑ Allocation. Refer to the Parts Catalog.
- ❑ Removing and installing. Refer to ⇒ “3.4 LuK Clutch, Removing and Installing”, page 62 .
- ❑ Only replace together with the SAC pressure plate
- ❑ Installation position. Refer to ⇒ Fig. ““Clutch Plate Installed Position”“ , page 63

3 - SAC Pressure Plate

- ❑ SAC = “Self Adjusting Clutch”
- ❑ Only replace together with the clutch plate
- ❑ Allocation. Refer to the Parts Catalog.
- ❑ Removing and installing. Refer to ⇒ “3.4 LuK Clutch, Removing and Installing”, page 62 .

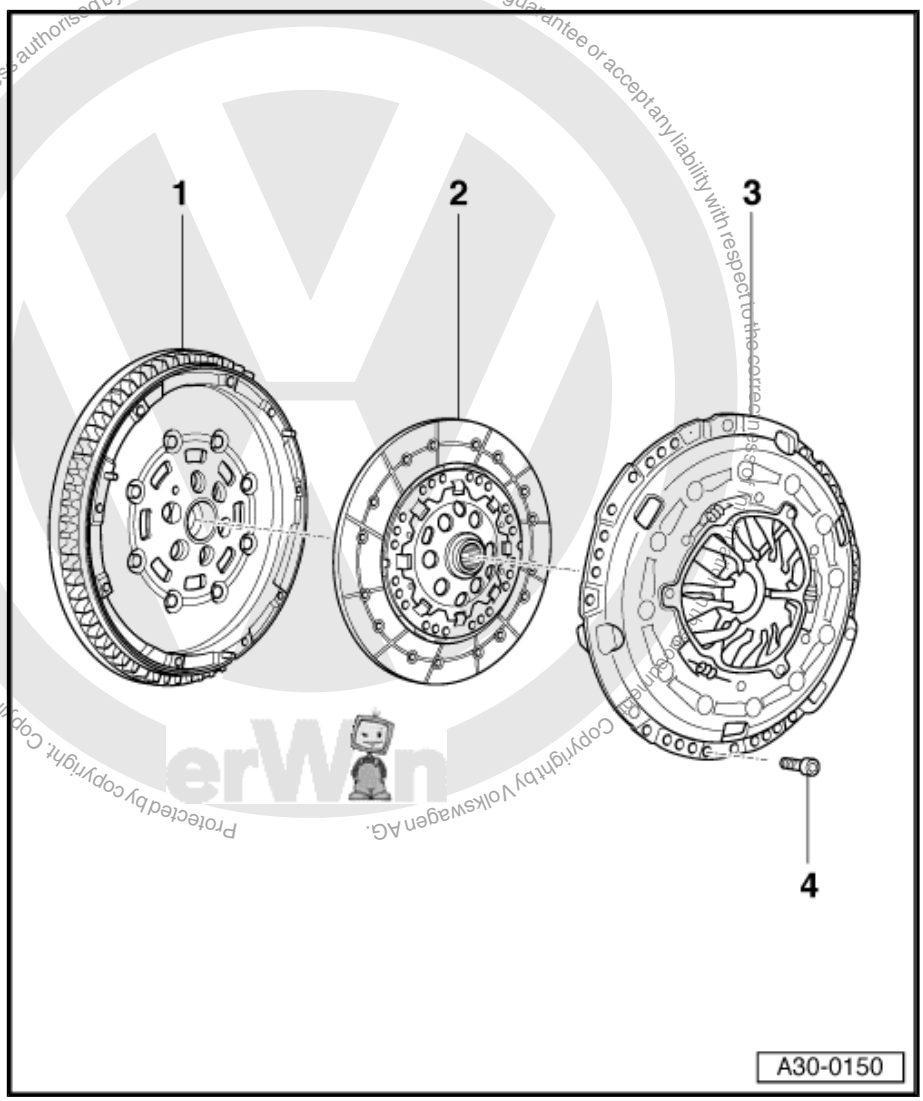

Protected by copyright. Copying for private or commercial purposes, in part or in whole, is not permitted unless authorised by Volkswagen AG. Volkswagen AG does not guarantee or accept any liability with respect to the correctness of information. Copyright by Volkswagen AG.

- Checking the ends of the diaphragm spring. Refer to
  ⇒ Fig. ""Check the Ends of the Diaphragm Spring"" , page 63
- Checking the spring connections and rivet connections. Refer to
  ⇒ Fig. ""Checking the Spring Connections and Rivet Connections"" , page 63

4 - Bolt

- M6 bolt: 13 Nm
- M7 bolt: 20 Nm
- Loosen or tighten in small steps and in diagonal sequence

Protected by copyright. Copying for private or commercial purposes, part or in whole, is not permitted unless authorised by Volkswagen AG. Volkswagen AG does not guarantee or accept any liability with respect to the correctness of information in this document. Copyright by Volkswagen AG.

4 Clutch, Servicing, Gasoline

⇒ "4.1 Clutch, Servicing", page 67

⇒ "4.2 Clutch, Removing and Installing", page 68

Special tools and workshop equipment required

- Flywheel Retainer - 3067-
- Alignment Tool - Clutch Plate - T10097-
- Torque Wrench 1331 5-50Nm - VAG1331-
- Grease for Clutch Disc Shaft Splines - G 000 100-

- On engines which have a crankshaft with a smaller diameter, or engines with a needle bearing in the crankshaft. Refer to ⇒ page 71 Alignment Tool - Clutch Plate - 3176- .

4.1 Clutch, Servicing

Note

- *Make sure the alignment bushings for centering the engine/transmission are installed inside the cylinder block. Install them if necessary.*
- *If the alignment sleeves are missing, it will be difficult to shift, there will be clutch problems and the transmission may make noises (loose rattling).*

Protected by copyright. Copying for private or commercial purposes, in part or in whole, is not permitted unless authorised by Volkswagen AG. Volkswagen AG does not guarantee or accept any liability with respect to the correctness of information in this document. Copyright by Volkswagen AG.

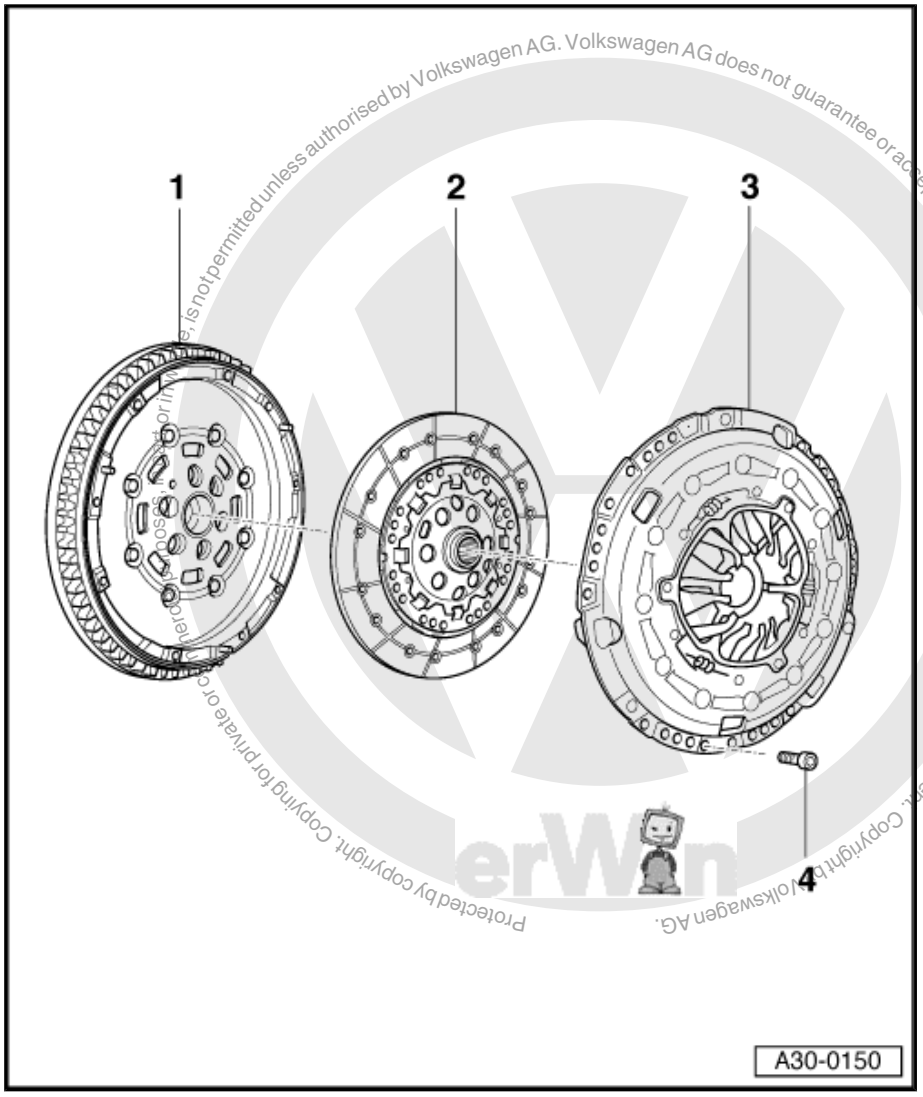

1 - Dual Mass Flywheel

- ❑ Removing and installing. Refer to ⇒ Rep. Gr. 13 .
- ❑ Make sure it fits securely on the centering pins
- ❑ Keep the clutch lining contact surface free of grooves, oil and grease.

2 - Clutch Plate

- ❑ Allocation. Refer to the Parts Catalog.
- ❑ Removing and installing. Refer to ⇒ "4.2 Clutch, Removing and Installing", page 68 .
- ❑ Only replace together with the SAC pressure plate
- ❑ Installation position. Refer to ⇒ Fig. ""Clutch Plate Installed Position"" , page 69

3 - SAC Pressure Plate

- ❑ SAC = "Self Adjusting Clutch"
- ❑ Only replace together with the clutch plate
- ❑ Allocation. Refer to the Parts Catalog.
- ❑ Removing and installing. Refer to ⇒ "4.2 Clutch, Removing and Installing", page 68 .
- ❑ Checking the ends of the diaphragm spring. Refer to ⇒ Fig. ""Check the Ends of the Diaphragm Spring"" , page 69
- ❑ Checking the spring connection and rivet connections. Refer to ⇒ Fig. ""Checking the Spring Connections and Rivet Connections"" , page 69

4 - Bolt

- ❑ M6: 13 Nm
- ❑ M7: 20 Nm
- ❑ Loosen or tighten in small steps and in a diagonal sequence.

4.2 Clutch, Removing and Installing

Removing

– Remove the transmission.

– Insert Flywheel Retainer - 3067- to loosen the bolts.

– Loosen the bolt diagonally in small steps.

– Remove the pressure plate and the clutch plate.

Installing

Install in reverse order of removal while. Note the following:

Protected by copyright. Copying for private or commercial purposes, in part or in whole, is not permitted unless authorised by Volkswagen AG. Volkswagen AG does not guarantee or accept any liability with respect to the correctness of information in this document. Copyright by Volkswagen AG.

Note

- *Allocate thrust plate and clutch disc according to the engine code. Refer to the Parts Catalog.*
- *Check whether there are centering sleeves for the engine/ transmission in the cylinder block; install if necessary.*
- *If the alignment sleeves are missing, it will be difficult to shift, there will be clutch problems and the transmission may make noises (loose rattling).*

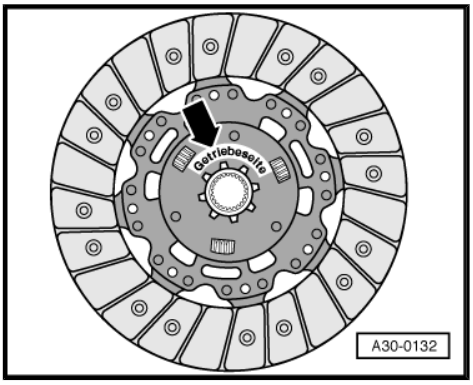

Clutch Plate Installed Position

- “Getriebeseite” (transmission side) -arrow- faces the transmission.

Check the Ends of the Diaphragm Spring

- Wear up to half the thickness of the diaphragm spring -arrows- is permitted.

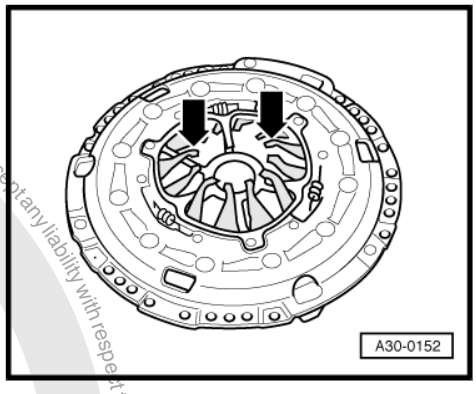

Checking the Spring Connections and Rivet Connections

– Check the spring connections -arrows A- for damage and make sure the rivet connections -arrows B- are tight.

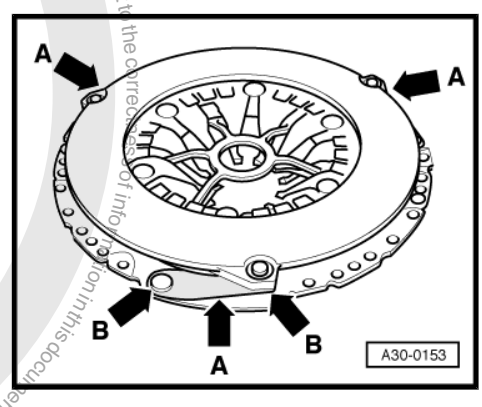

Protected by copyright. Copying for private or commercial purposes, in part or in whole, is not permitted unless authorised by Volkswagen AG. Volkswagen AG does not guarantee or accept any liability with respect to the correctness of information in this document. Copyright by Volkswagen AG.

Only Check Position of Adjustment Mechanism with New Pressure Plates

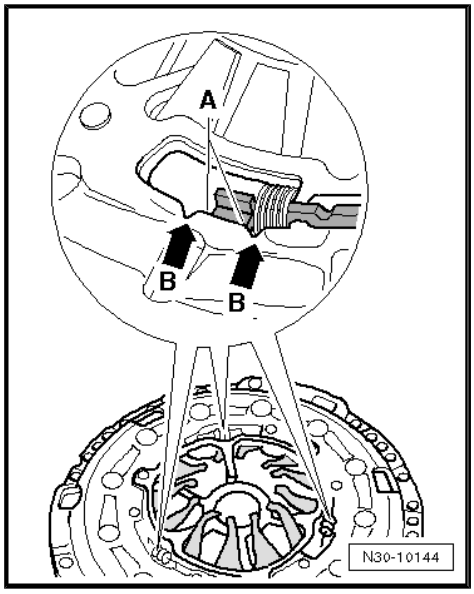

- Both edges -A- of the adjusting ring must be located between both notches -arrows B-.
- If the adjusting ring takes on a different position with new pressure plates, pressure plate and clutch plate must not be installed.
- With used clutches, the adjusting ring may take on a position outside of the notches.

Note

- *Replace clutch plates and pressure plates if the rivets are damaged or loose.*
- *Replace the pressure plate and the clutch plate together.*
- *Allocate the clutch plate and pressure plate to match the engine code. Refer to the Parts Catalog.*
- *To reduce odor caused by a burnt clutch, thoroughly clean the clutch housing, the flywheel and the side of the engine facing toward the transmission.*
- *Clean input shaft splines and (on used clutch plates) the hub splines, remove corrosion and apply a very thin coating of Grease for Clutch Disc Shaft Splines - G 000 100- to the splines. Then move the clutch plate back and forth on the input shaft until the hub moves freely on the shaft. Remove any excess grease.*
- *The pressure plates are protected from corrosion and lubricated. Only the running surfaces may be cleaned. Otherwise the service life of the clutch will be shortened considerably.*
- *The pressure plate contact surface and the clutch plate lining must completely touch the flywheel. Install the bolts.*

– Move the Flywheel Retainer - 3067- during installation.

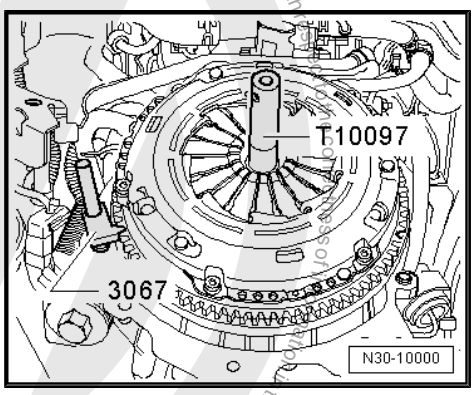

Protected by copyright. Copying for private or commercial purposes, in part or in whole, is not permitted unless authorised by Volkswagen AG. Volkswagen AG does not guarantee or accept any liability with respect to the correctness of information in this document. Copyright by Volkswagen AG.

Engines having A Crankshaft with A Smaller Diameter -arrow-, or Engines having A Needle Bearing -arrow- in the Crankshaft

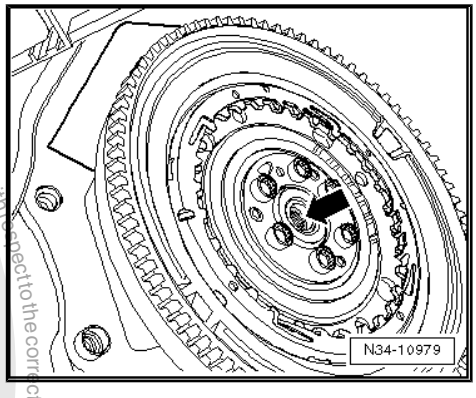

Centering the Clutch Disc, Removing and Installing the Pressure Plate on Engines with A Crankshaft with A Smaller Diameter, or Engines with A Needle Bearing in the Crankshaft.

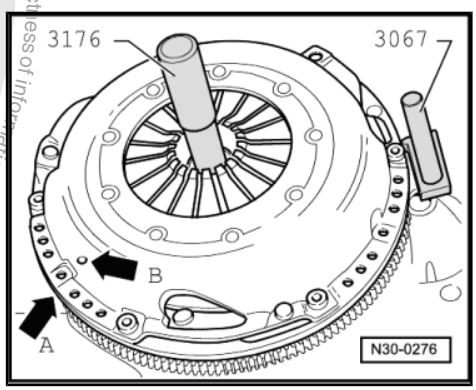

Note

Ignore arrows -A and B-.

Continuation for All

- Position the pressure plate on the centering pins.
- Install all the bolts evenly, by hand, until the bolt heads contact the pressure plate.
- Tighten the bolts in small steps and in diagonal sequence to prevent damaging the centering holes of the pressure plate and the centering pins of the dual mass flywheel -item 4- ⇒ Item 4 (page 68) .
- Install the transmission.

Protected by copyright. Copyright by Volkswagen AG.

5 Special Tools

Special tools and workshop equipment required

- Flywheel Retainer - 3067-
- Alignment Tool - Clutch Plate - T10097-
- Torque Wrench 1331 5-50Nm - VAG1331-
- Grease for Clutch Disc Shaft Splines - G 000 100-

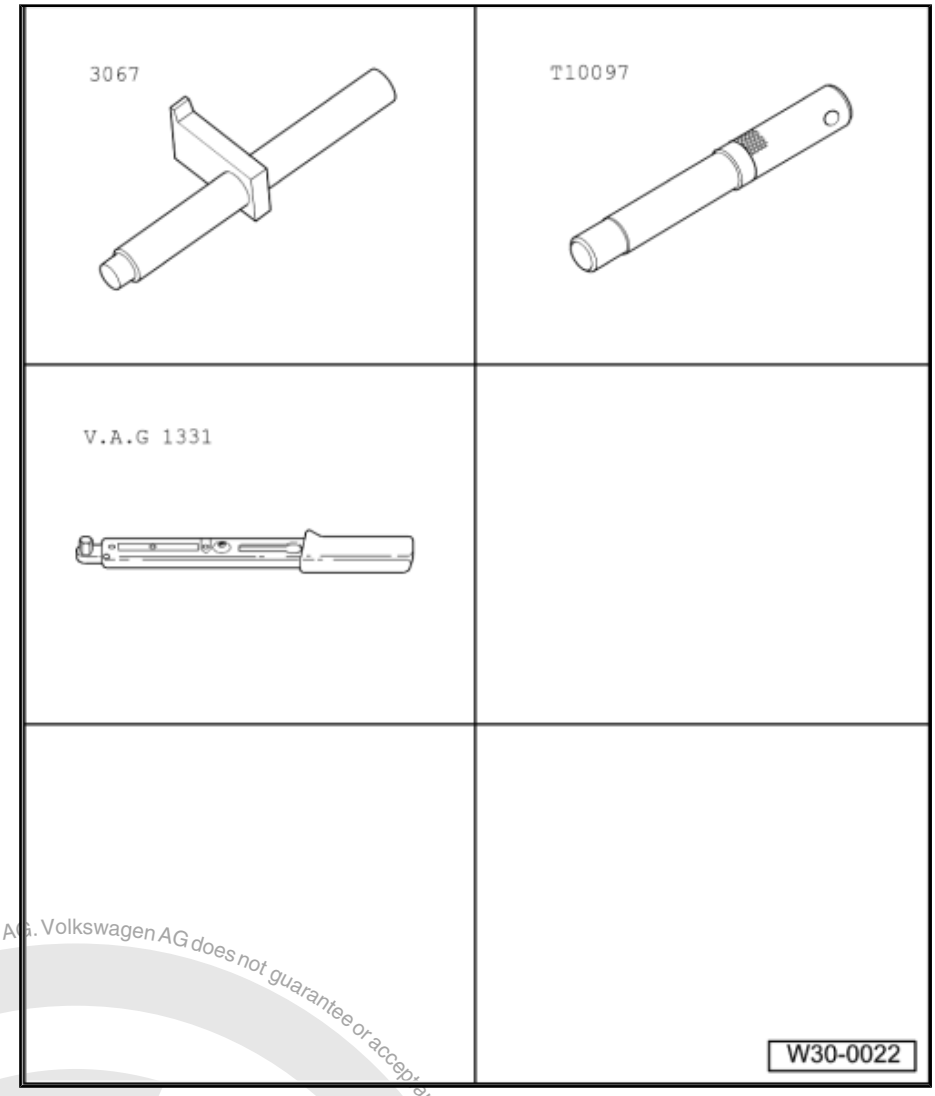

- Clutch Pedal Pliers - T10005-

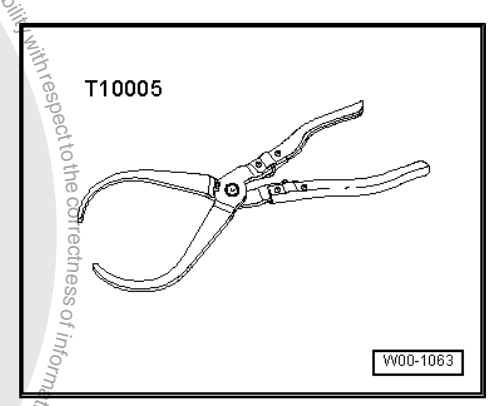

Protected by copyright. Copying for private or commercial purposes, in part or in whole, is not permitted unless authorised by Volkswagen AG. Volkswagen AG does not guarantee or accept any liability with respect to the correctness of information in this document. Copyright by Volkswagen AG.

- Over-Center Spring Assembly Tool - T10178-

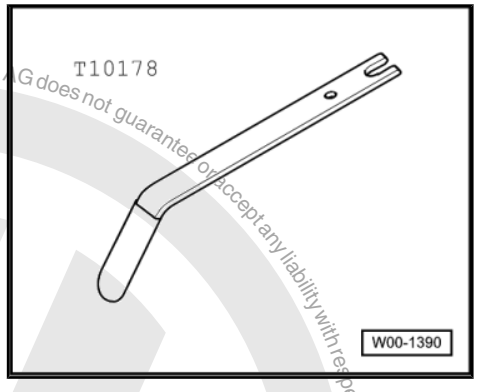

- Sealing Tool - T10249-

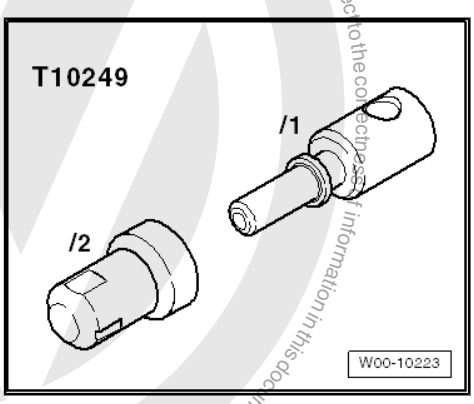

- Puller - Crankshaft/Power Steering Seal - 1 - T20143/1-

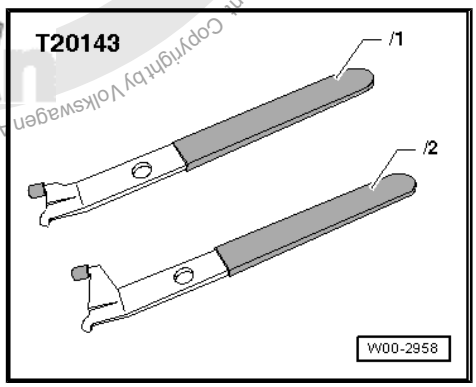

- Seal Installer - Driveshaft - T40008-

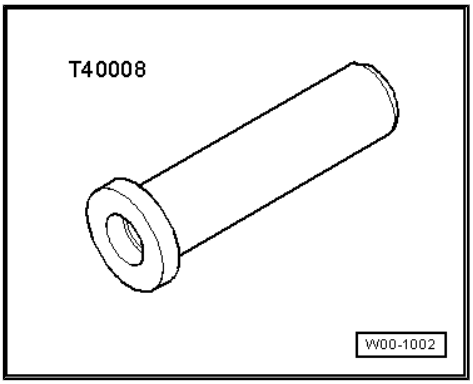

Protected by copyright. Copying for private or commercial purposes, in part or in whole, is not permitted unless authorised by Volkswagen AG. Volkswagen AG does not guarantee or accept any liability with respect to the correctness of information in this document. Copyright by Volkswagen AG.

Protected by copyright. Copying for private or commercial purposes, in part or in whole, is not permitted unless authorised by Volkswagen AG. Volkswagen AG does not guarantee or accept any liability with respect to the correctness of information in this document. Copyright by Volkswagen AG.

- Torque Wrench 1331 5-50Nm - VAG1331-

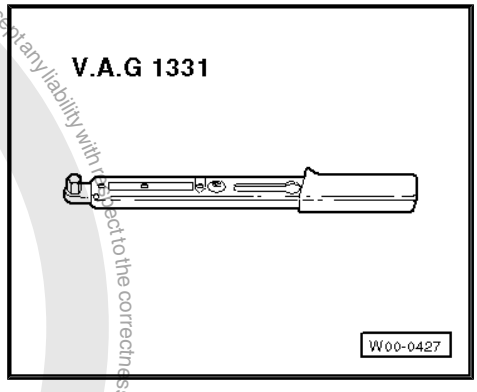

- Brake Charger/Bleeder Unit - VAS5234- or

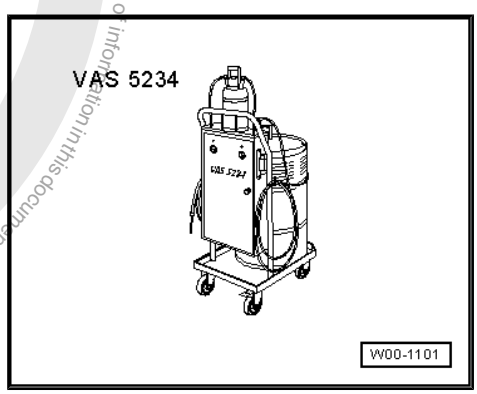

- Hose Clip Pliers - VAS6362-

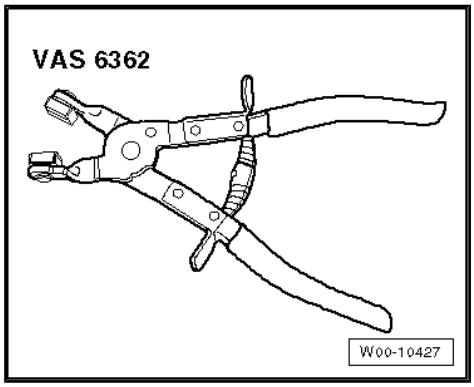

- Hose Clamps - Up To 25mm - 3094-

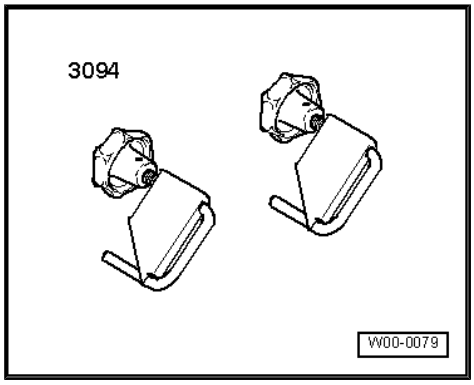

- Alignment Tool - Clutch Plate - 3176- .

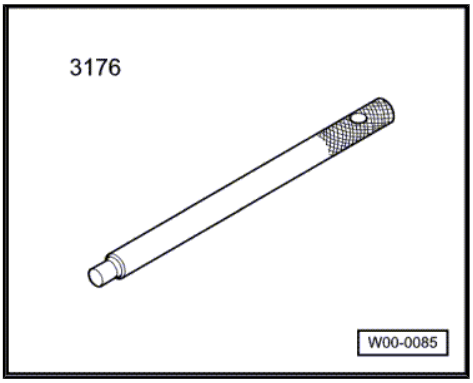

Protected by copyright. Copying for private or commercial purposes, in part or in whole, is not permitted unless authorised by Volkswagen AG. Volkswagen AG does not guarantee or accept any liability with respect to the correctness of information in this document. Copyright by Volkswagen AG.

34 – Operation and Housing

1 Shift Mechanism, Servicing

⇒ “1.1 Shift Mechanism Installation Position”, page 76

⇒ “1.2 Overview - Selector Mechanism”, page 78

⇒ “1.3 Overview - Gearshift Knob and Cover”, page 79

⇒ “1.4 Boot with Shifter Knob and Noise Insulation, Removing and Installing”, page 79

⇒ “1.5 Overview - Gearshift Lever and Gearshift Housing, through 10/2006”, page 81

⇒ “1.6 Overview - Gearshift Lever and Gearshift Housing, from 11/2006”, page 83

⇒ “1.7 Overview - Operating Cables”, page 85

⇒ “1.8 Plastic Relay Lever”, page 89

⇒ “1.9 Selector Mechanism, Removing and Installing”, page 92

⇒ “1.10 Gearshift Cable and Selector Cable, Removing and Installing”, page 96

⇒ “1.11 Selector Mechanism, Adjusting”, page 97

⇒ “1.12 Selector Mechanism, Disassembling and Assembling, from 11/2006”, page 100

1.1 Shift Mechanism Installation Position

-Arrow A- Gearshift Lever Movement

-Arrow B- Selector Lever Movement

Protected by copyright. Copying for private or commercial purposes, in part or in whole, is not permitted unless authorised by Volkswagen AG. Volkswagen AG does not guarantee or accept any liability with respect to the correctness of information in this document. Copyright by Volkswagen AG.

A - Gearshift Lever Cable

B - Selector Cable

C - Heat Shield

- ❑ Remove the gearshift mechanism before removal

1 - Selector Lever

2 - Relay Lever

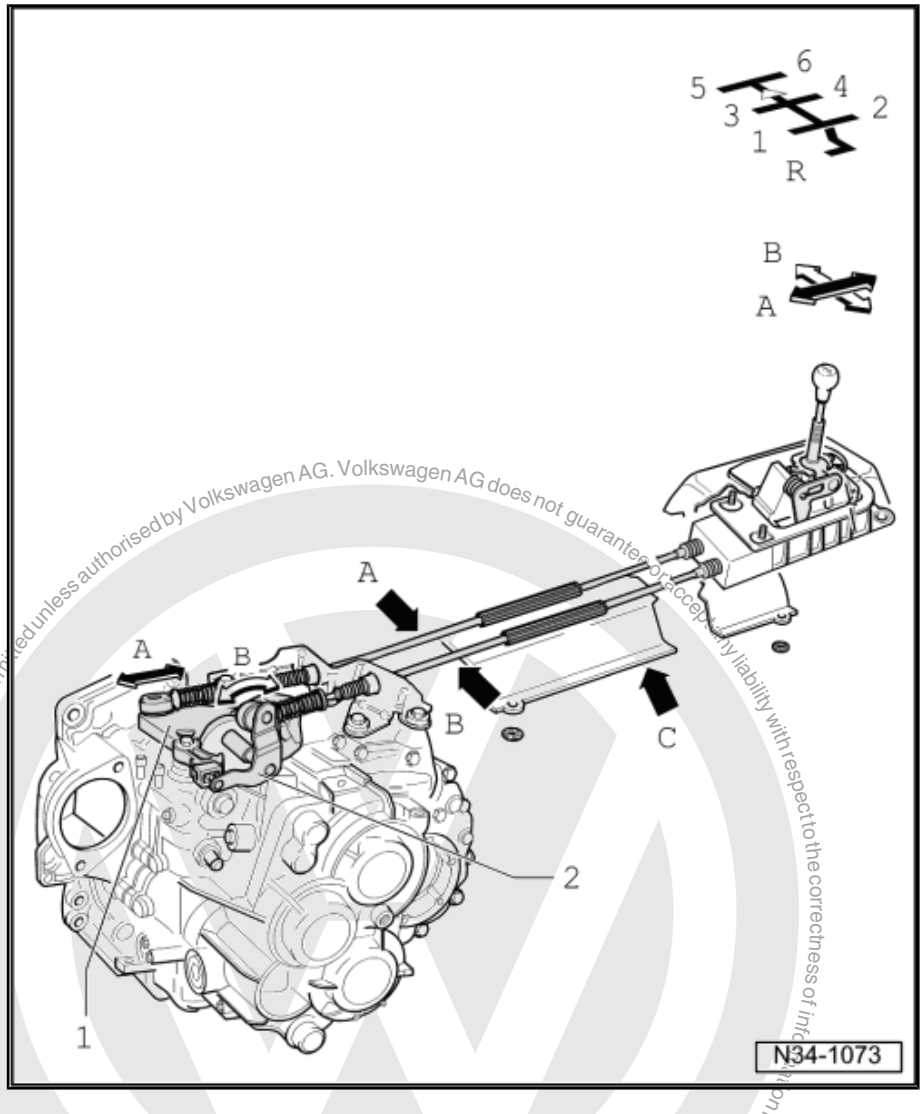

Protected by copyright. Copying for private or commercial purposes, in part or in whole, is not permitted unless authorised by Volkswagen AG. Volkswagen AG does not guarantee or accept any liability with respect to the correctness of information in this document. Copyright by Volkswagen AG.

1.2 Overview - Selector Mechanism

Note

- *Get the anti-theft code for the radio before disconnecting the battery.*
- *Disconnect the ground cable from the battery when working on the gearshift mechanism inside the engine compartment. Refer to ⇒ Electrical Equipment; Rep. Gr. 27 ; Battery; Battery, Disconnecting and Connecting .*
- *Read the information on what to do after connecting the battery. Refer to ⇒ Electrical System; Rep. Gr. 27 ; Battery; Battery, Removing and Installing .*
- *To work on shift mechanism on engine compartment, remove entire air filter housing if it is located over the shift mechanism. Refer to ⇒ Rep. Gr. 23 ; Diesel Direct Injection System; Air Filter Housing, Removing and Installing or ⇒ Rep. Gr. 24 ; Air Filter; Air Filter Housing, Removing and Installing .*
- *The shift mechanism must be removed in order to replace the operating cables. Refer to ⇒ "1.9 Selector Mechanism, Removing and Installing", page 92 .*
- *Do not bend the operating cables.*

I - ⇒ "1.3 Overview - Gearshift Knob and Cover", page 79 .

II - ⇒ "1.5 Overview - Gearshift Lever and Gearshift Housing, through 10/2006", page 81 .

II - ⇒ "1.6 Overview - Gearshift Lever and Gearshift Housing, from 11/2006", page 83 .

III - ⇒ "1.7 Overview - Operating Cables", page 85

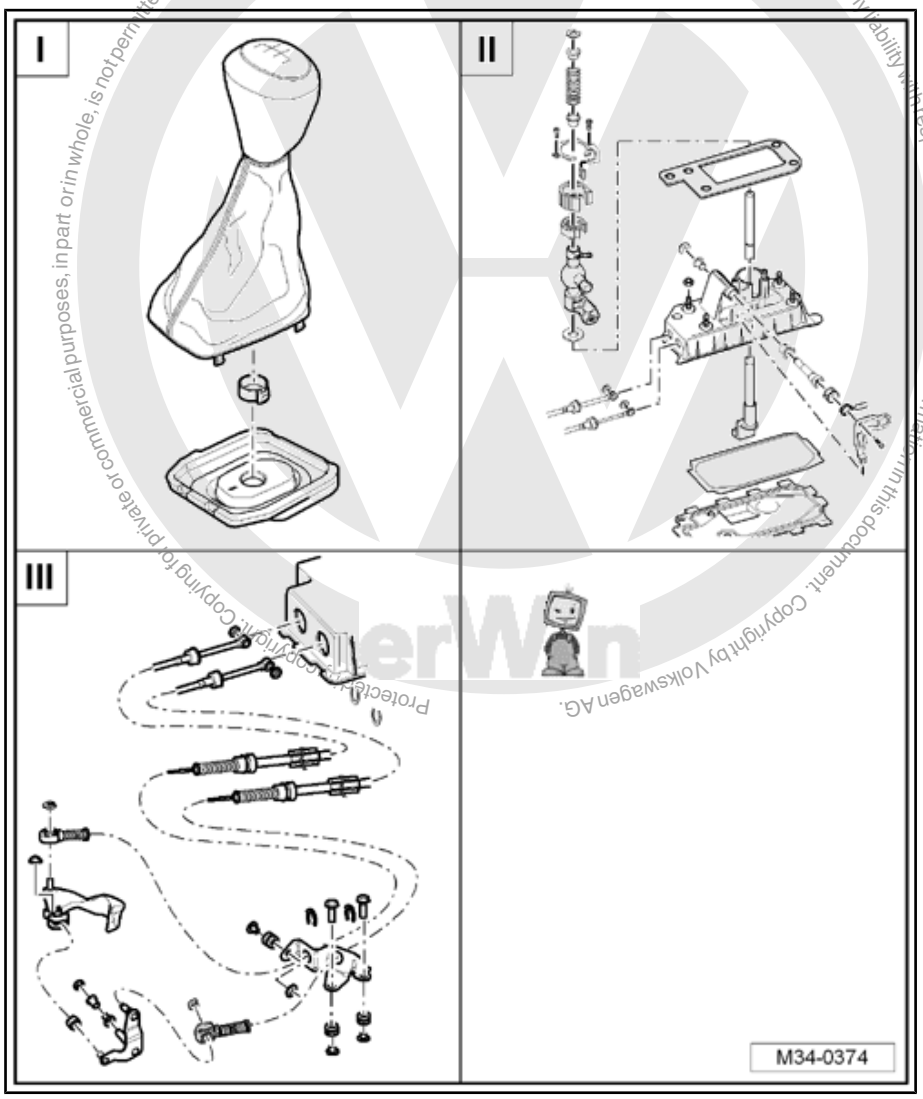

Gearshift mechanism, removing and installing. Refer to ⇒ "1.9 Selector Mechanism, Removing and Installing", page 92 .

Adjust the gearshift mechanism. Refer to
⇒ “1.11 Selector Mechanism, Adjusting”, page 97 .

1.3 Overview - Gearshift Knob and Cover

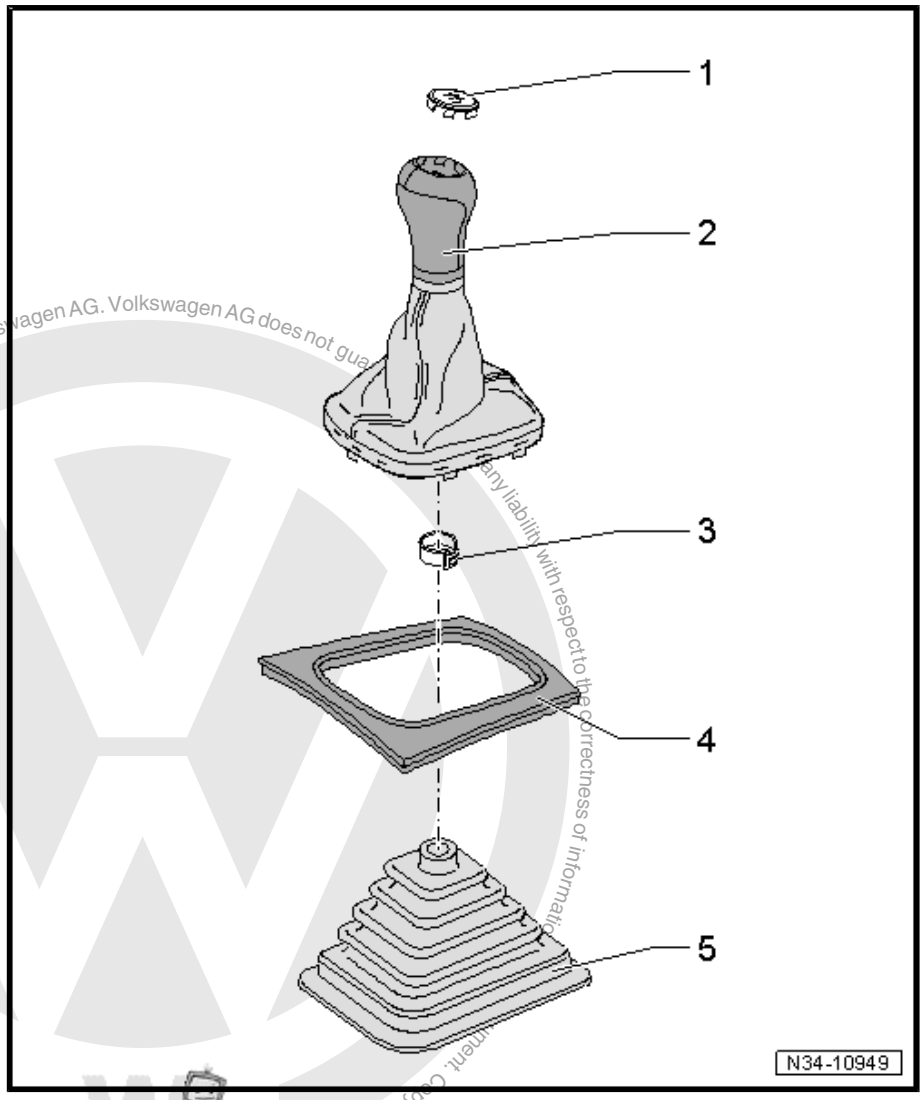

1 - Badge

- ❑ Can be carefully pried off a plastic or leather shift knob

2 - Gearshift Knob

- ❑ With boot
- ❑ The shift knob and boot cannot be separated from each other.
- ❑ Always replace together
- ❑ Removing and installing. Refer to ⇒ “1.4 Boot with Shifter Knob and Noise Insulation, Removing and Installing”, page 79 .

3 - Clamp

- ❑ For securing the shift knob to the shift lever
- ❑ Secure on the gearshift knob -item 2- ⇒ Item 2 (page 79) using Hose Clamp Pliers - VAG1275- .
- ❑ Replace after removing

4 - Center Console Frame

- ❑ Combined in one piece with the upper center console section on some versions

5 - Noise Insulation

- ❑ Not on all vehicles
- ❑ Arrow on noise insulation points in direction of travel
- ❑ Retaining tab spacing varies
- ❑ Therefore can only be arranged in one position

1.4 Boot with Shifter Knob and Noise Insulation, Removing and Installing

Special tools and workshop equipment required

♦ Hose Clip Pliers - VAG1275A-

Removing

– Remove the boot with the center console frame from the center console or pry it out carefully -arrows-.

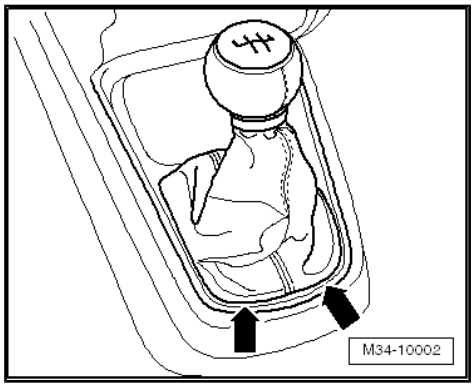

Note

On some equipment versions, the boot must be pried out at the front area.

– Fold the boot with the center console frame up over the shifter knob.

– Open the clamp -arrow- and remove the shift knob and boot.

In some equipment versions, the center console frame remains in the center console.

– It may be necessary to pull or pry the center console frame out carefully.

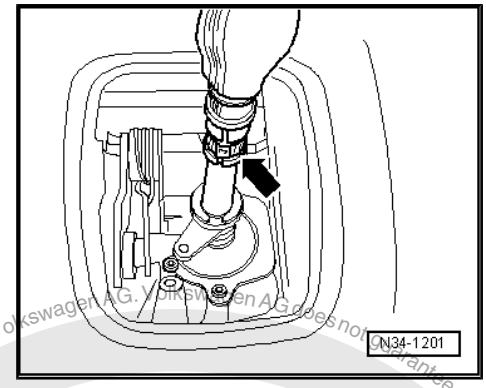

– Remove the noise insulation -1-.

Installing

– Install the noise insulation.

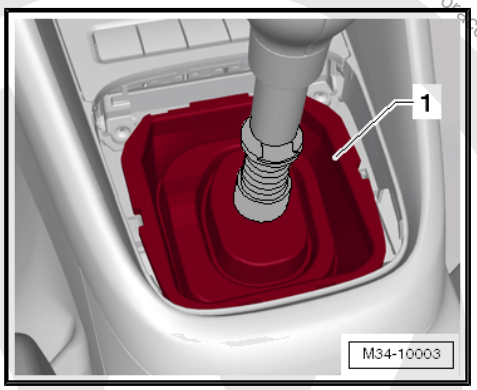

Installation Location, Noise Insulation

- -Arrow A- points in direction of travel.
- The tabs -arrows B- must latch into the center console.

– Press the center console frame into the center console, if necessary.

– Then turn inner side of boot toward outside.

Install the shift knob all the way on.

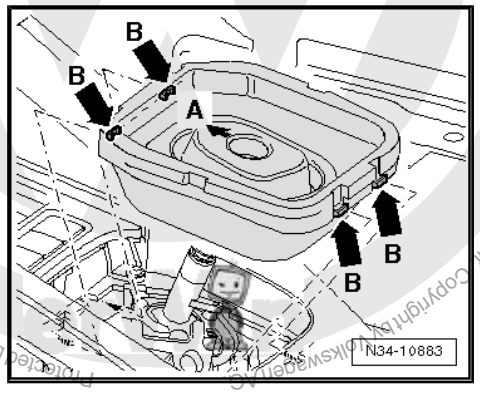

Protected by copyright. Copying for private or commercial purposes, in part or in whole, is not permitted unless authorised by Volkswagen AG. Volkswagen AG does not guarantee or accept any liability with respect to the correctness of information in this document. Copyright by Volkswagen AG.

– Install the shifter knob with frame and boot and press the new clamp -arrow- together.
– Press the boot with the frame into the center console or the boot into the frame.

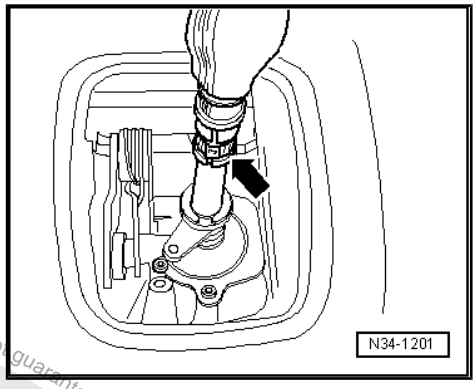

1.5 Overview - Gearshift Lever and Gearshift Housing, through 10/2006

Note

Lubricate bearing areas and slide surfaces with Grease - G 000 450 02- .

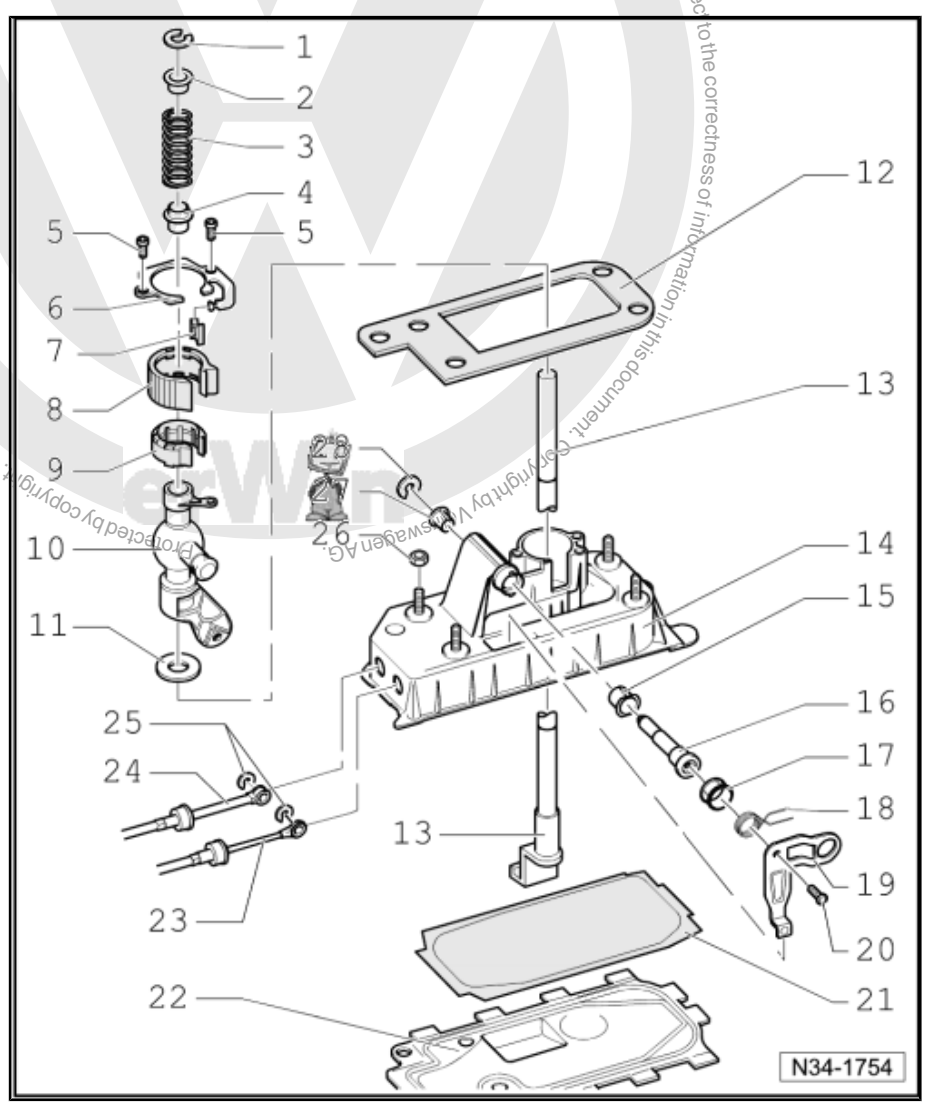

1 - Lock Washer
- ❑ Removing and installing. Refer to ⇒ Fig. ""Removing and Installing the Lock Washer"" page 83 .

2 - Bushing

3 - Pressure Spring

4 - Bushing

5 - TORX® Bolt
- ❑ 5 Nm

6 - Cover

7 - Insulation

8 - Insulation

9 - Bearing Shell

10 - Gearshift Lever Guide

11 - Washer

12 - Seal
- ❑ Between the gearshift housing and the underbody
- ❑ Self-adhesive
- ❑ Affix to the gearshift housing

13 - Gearshift Lever

14 - Gearshift Housing

15 - Bearing Bushing

16 - Mounting Pin

17 - Guide Bushing

18 - Pressure Spring
- ❑ Installing. Refer to ⇒ Fig. ""Installing the Pressure Spring"" , page 83 .

Protected by copyright. Copying for private or commercial purposes, in whole or in part, is not permitted unless authorised by Volkswagen AG. Volkswagen AG does not guarantee or accept any liability with respect to the correctness of information in this document. Copyright by Volkswagen AG.

19 - Selector Bracket

20 - TORX® Bolt

- ❑ 5 Nm

21 - Seal

- ❑ Replace after removing

22 - Base Plate

- ❑ Bend the tabs in order to remove
- ❑ Replace after removing

23 - Selector Cable

- ❑ To the selector bracket
- ❑ Removing and installing. Refer to
  ⇒ Fig. ""Detaching from the Selector Cable and the Shift Cable and Attaching"" , page 82 .

24 - Gearshift Cable

- ❑ Removing from the shift lever guide and attaching to the shift lever guide. Refer to
  ⇒ Fig. ""Detaching from the Selector Cable and the Shift Cable and Attaching"" , page 82

25 - Lock Washer

- ❑ Replace after removing

26 - Nut

- ❑ M6: 8 Nm
- ❑ M8: 25 Nm
- ❑ Quantity: 4

27 - Bearing Bushing

- ❑ Fits in one position only

28 - Lock Washer

- ❑ Replace after removing

This document. Copyright by Volkswagen AG. Protected by copyright. Copying for private or commercial purposes, in part or in whole, is not permitted unless authorised by Volkswagen AG. Volkswagen AG does not guarantee or accept any liability with respect to the correctness of information.

Detaching from the Selector Cable and the Shift Cable and Attaching

– Remove the lock washer from the shift cable -A- and the selector cable -B-.

Lift the tab with a screwdriver in direction of -arrow 1- and remove the lock washer in direction of -arrow 2-.

– Remove the shift cable -A- from the gearshift lever mount.

– Remove the selector cable -B- from the selector bracket mount.

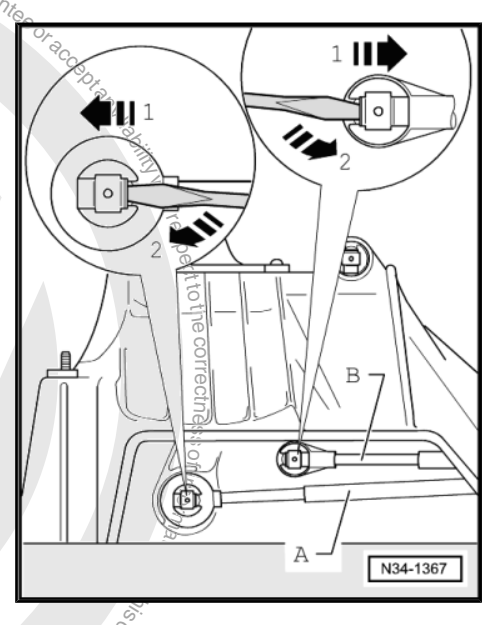

Removing and Installing the Lock Washer

– Push the bushing -arrow B- all the way in direction of -arrow C- and remove or install the lock washer -arrow A-.

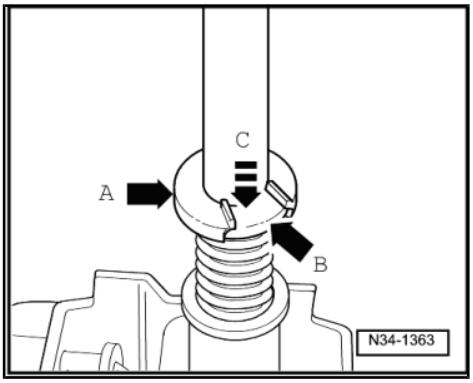

Note

- *Do not tilt the bushing when pushing it down.*
- *The slot in the lever for the circlip must be visible.*
- *Carefully release the tension on the spring.*

Installing the Pressure Spring

– Install the compression spring so that the brace -A- contacts upper part of pin -arrow-.

– Pull the brace -B- downward so that it reached the bottom of the pin -arrow-.

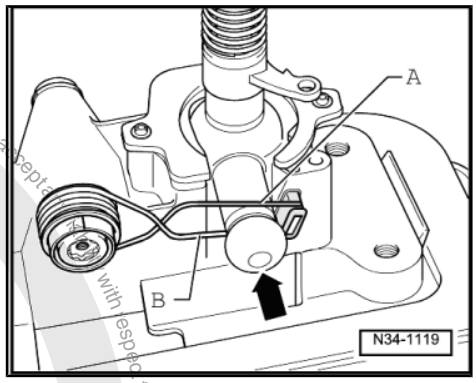

1.6 Overview - Gearshift Lever and Gearshift Housing, from 11/2006

Note

- *Lubricate the bearing areas and the sliding surfaces.*
- *Refer to the Parts Catalog for the grease allocation.*
- *Gearshift mechanism, disassembling and assembling. Refer to* *⇒ "1.12 Selector Mechanism, Disassembling and Assembling, from 11/2006", page 100* .

Protected by copyright. Copying for private or commercial purposes, in part or in whole, is not permitted unless authorised by Volkswagen AG. Volkswagen AG does not guarantee or accept any liability with respect to the correctness of information in this document. Copyright by Volkswagen AG.

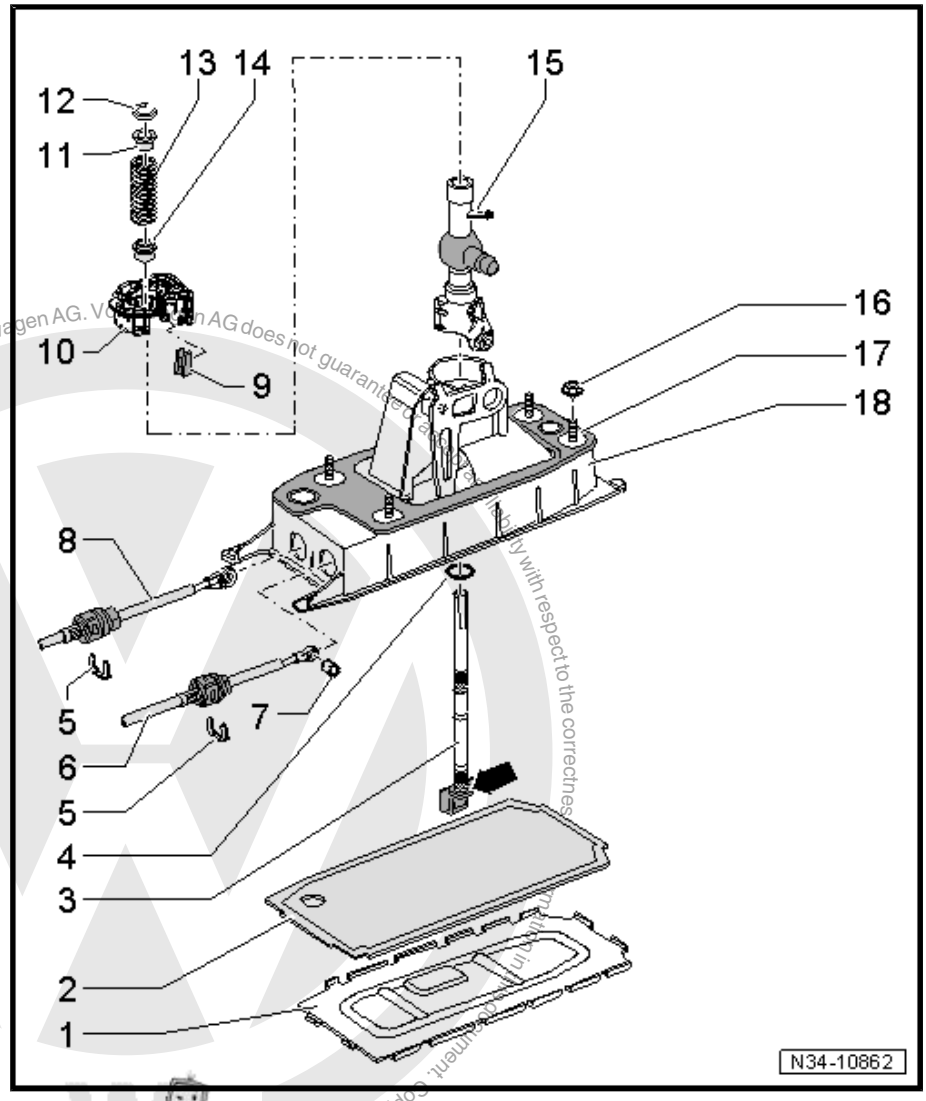

1 - Base Plate

- ❑ Bend the tabs in order to remove
- ❑ Replace after removing

2 - Seal

- ❑ Replace after removing

3 - Gearshift Lever

- ❑ Can be removed and installed with the shift lever guide installed -item 15- ⇒ Item 15 (page 84) .

4 - Washer

- ❑ Slide out of shift lever as far as stop -arrow-.

5 - Lock Washer

- ❑ Be careful not to damage the cables when removing them
- ❑ Replace after removing

6 - Selector Cable

- ❑ Pry off of selector bracket
- ❑ Press onto selector bracket inside the shift mechanism
- ❑ Installation position. Refer to ⇒ "1.1 Shift Mechanism Installation Position", page 76 .

7 - Bushing

8 - Gearshift Cable

- ❑ Pry off of shift lever guide
- ❑ Press onto shift lever guide inside the shift mechanism
- ❑ Installation position. Refer to ⇒ "1.1 Shift Mechanism Installation Position", page 76 .

9 - Insulation

10 - Bearing Shell

- ❑ Will get damaged when being removed
- ❑ Replace after removing

11 - Bushing

12 - Lock Washer

- ❑ Removing and installing. Refer to ⇒ Fig. ""Removing and Installing the Lock Washer"" , page 83 .

13 - Pressure Spring

- ❑ Removing and installing. Refer to ⇒ Fig. ""Removing and Installing the Lock Washer"" , page 83 .

14 - Bushing

15 - Gearshift Lever Guide

16 - Nut

- ❑ M6: 8 Nm
- ❑ M8: 25 Nm
- ❑ Quantity: 4

17 - Seal

- ❑ Between the gearshift housing and the underbody
- ❑ Self-adhesive
- ❑ Affix to the gearshift housing

18 - Gearshift Housing

- ❑ With spring and selector bracket
- ❑ Spring and selector bracket cannot be removed

1.7 Overview - Operating Cables

Note

Lubricate the bearing areas and the sliding surfaces. Refer to the Parts Catalog for the grease allocation.

1 - Gearshift Cable

- ❑ Attach to the cable retainer -item 18- ⇒ Item 18 (page 87) .
- ❑ Installation position. Refer to ⇒ "1.1 Shift Mechanism Installation Position", page 76 .
- ❑ From 11/2006 changed fastener on shift lever inside shift mechanism -item 8- ⇒ Item 8 (page 84)

2 - Selector Cable

- ❑ Attach to the cable retainer -item 11- ⇒ Item 11 (page 86) .
- ❑ Installation position. Refer to ⇒ "1.1 Shift Mechanism Installation Position", page 76 .
- ❑ From 11/2006 changed fastener on selector bracket inside shift mechanism -item 6- ⇒ Item 6 (page 84)

3 - Lock Washer

- ❑ Replace after removing
- ❑ Discontinued on gearshift mechanisms from 11/2006. Refer to ⇒ "1.6 Overview - Gearshift Lever and Gearshift Housing, from 11/2006", page 83

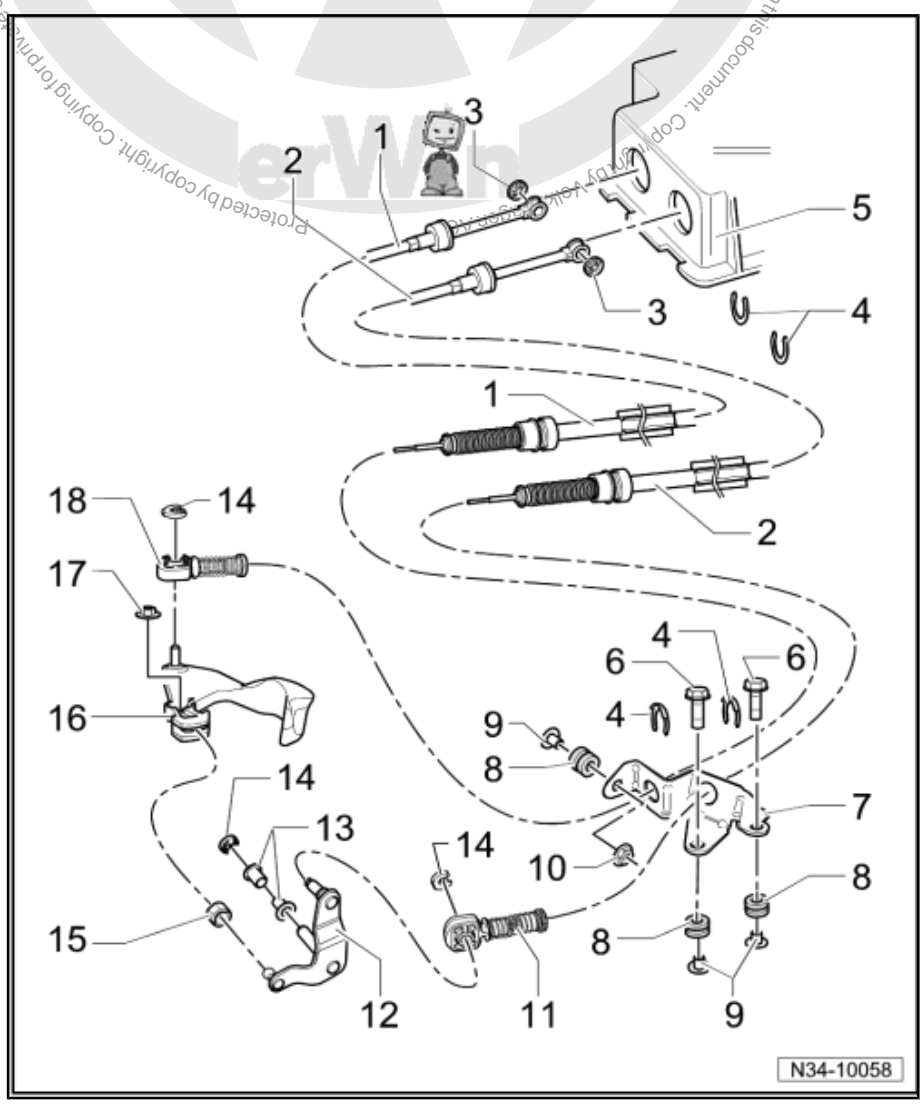

4 - Lock Washer

- ❑ Be careful not to damage the cables when removing them
- ❑ Replace after removing

5 - Gearshift Housing

6 - Hex Bolt

- ❑ 20 Nm
- ❑ For the cable bracket
- ❑ Quantity: 2

7 - Cable Bracket

- ❑ Can be made of plastic or metal

8 - Grommet

- ❑ Cable mounting bracket to transmission

9 - Spacer

10 - Nut

- ❑ 20 Nm
- ❑ For the cable bracket

11 - Cable Retainer

- ❑ For attaching the selector cable to the relay lever
- ❑ Adjust the gearshift mechanism after installing. Refer to ⇒ “1.11 Selector Mechanism, Adjusting”, page 97 .
- ❑ Do not interchange, cable locking mechanisms for selector cable on linkage lever and for shift cable on transmission shift lever are different. Refer to ⇒ Fig. ““Cable Retainer Allocation”“ , page 87 .
- ❑ From 05/2007 installed in with the plastic relay lever. Refer to ⇒ “1.8 Plastic Relay Lever”, page 89 .
- ❑ Removing from plastic relay lever. Refer to ⇒ “1.8 Plastic Relay Lever”, page 89
- ❑ Installing on plastic relay lever. Refer to ⇒ “1.8 Plastic Relay Lever”, page 89
- ❑ Allocation. Refer to ⇒ Fig. ““Cable Retainer Allocation”“ , page 87 .

12 - Relay Lever

- ❑ Installation position. Refer to ⇒ Fig. ““Selector Lever/Relay Lever Installed Position”“ , page 88 .
- ❑ Adjust the gearshift mechanism after installing. Refer to ⇒ “1.11 Selector Mechanism, Adjusting”, page 97 .
- ❑ Can be made of plastic or metal
- ❑ The metal relay lever is placed in the bushings -item 13- ⇒ Item 13 (page 86) and secured with a lock washer -item 14- ⇒ Item 14 (page 86) .
- ❑ From 05/2007 plastic relay lever
- ❑ Plastic relay lever, removing and installing with cable retainer. Refer to ⇒ “1.8 Plastic Relay Lever”, page 89
- ❑ The bushings and lock washers are not needed with the plastic relay lever

13 - Bearing Bushing

- ❑ Discontinued on the plastic relay lever

14 - Lock Washer

- ❑ Replace after removing
- ❑ Discontinued on the plastic relay lever

15 - Sliding Shoe

16 - Selector Lever

- ❑ With a balance weight
- ❑ Insert so that master spline aligns with shift rod
- ❑ Adjust the gearshift mechanism after installing. Refer to ⇒ “1.11 Selector Mechanism, Adjusting”, page 97 .
- ❑ Installation position. Refer to ⇒ Fig. ““Selector Lever/Relay Lever Installed Position”“ , page 88 .
- ❑ From 06/2006 the cable retainer mounting pin has a smaller diameter. Refer to ⇒ Fig. ““As of 06/2006, Smaller Bolt Diameter for the Shift Cable Retainer.”“ , page 87

Protected by copyright. Copying for private or commercial purposes, in part or in whole, is not permitted unless authorised by Volkswagen AG. Volkswagen AG does not guarantee or accept any liability with respect to the correctness of information in this document. Copyright by Volkswagen AG.

17 - Hex Nut

- ❑ 23 Nm
- ❑ Self-locking
- ❑ Replace after removing

18 - Cable Retainer

- ❑ For attaching the shift cable to the transmission shift lever
- ❑ Adjust the gearshift mechanism after installing. Refer to ⇒ “1.11 Selector Mechanism, Adjusting”, page 97 .
- ❑ Do not interchange, cable locking mechanisms for selector cable on linkage lever and for shift cable on transmission shift lever are different. Refer to ⇒ Fig. ““Cable Retainer Allocation”“ , page 87 .

Cable Retainer Allocation

These holes have different diameters.

Cable Retainer For:	Dimension “a”
1. - Gearshift cable to gearshift lever from 06/2006	8.5 mm
2. - Gearshift cable to gearshift lever to 05/2006	10 mm
2. - Selector cable to metal relay lever	8 mm
2. - Selector cable to plastic relay lever. Refer to ⇒ “1.8 Plastic Relay Lever”, page 89	10 mm

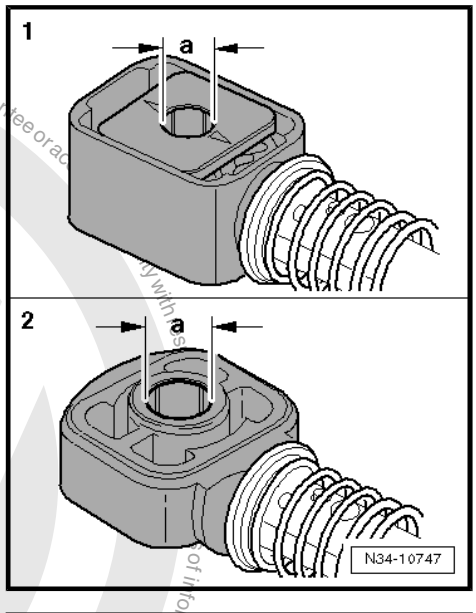

As of 06/2006, Smaller Bolt Diameter for the Shift Cable Retainer.

Mounting Pin for Gearshift Cable Retainer	Dimension “a”
Through 05/2006	10 mm
From 06/2006	8.5 mm

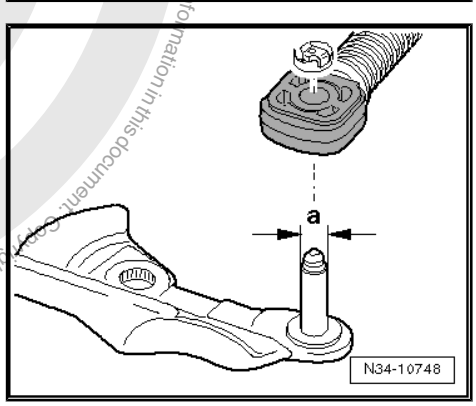

Protected by copyright. Copying for private or commercial purposes, in part or in whole, is not permitted unless authorised by Volkswagen AG. Volkswagen AG does not guarantee or accept any liability with respect to the correctness of information in this document. Copyright by Volkswagen AG.

Installing the Transmission Shift Lever

– When positioning the transmission shift lever, make sure the gap -arrow A- is placed over the missing selector shaft teeth -arrow B-.

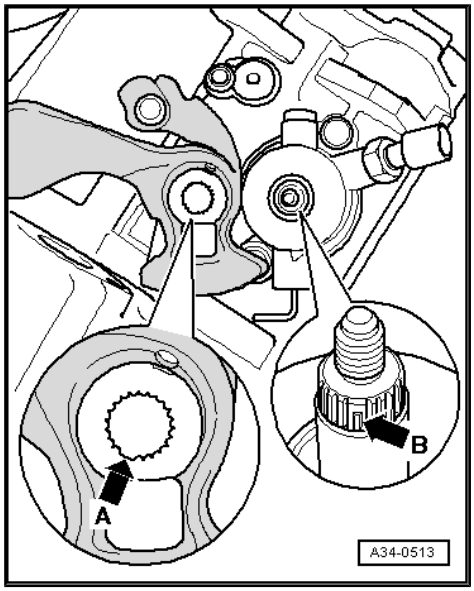

Selector Lever/Relay Lever Installed Position

1 - Gearshift lever with balance weight

2 - The relay lever grips into the sliding rail on the gearshift lever via the sliding shoe -arrow-.

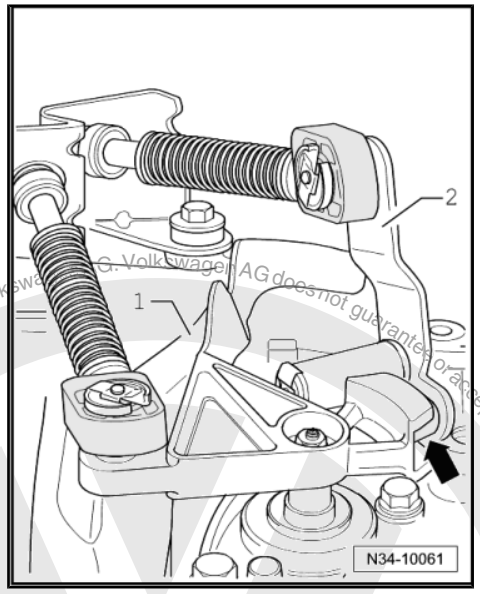

Cable Retainer, Replacing

– Pull the securing mechanism forward at the cable retainer from the shift cable and selector cable as far as the stop in direction of -1 arrows- and then release it to the left in direction of -2 arrows-.

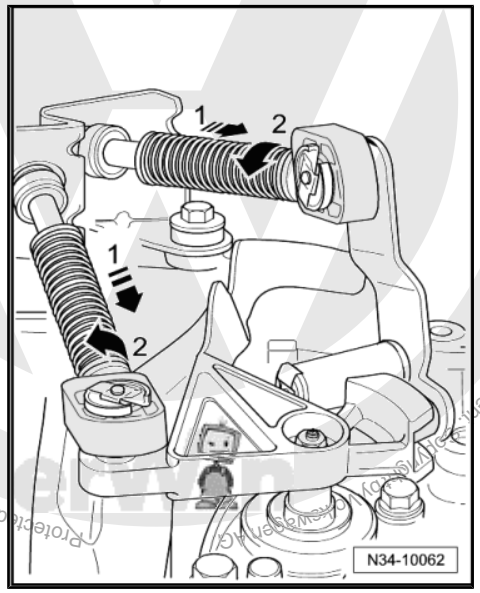

Protected by copyright. Copying for private or commercial purposes, in part or in whole, is not permitted unless authorised by Volkswagen AG. Volkswagen AG does not guarantee or accept any liability with respect to the correctness of information in this document.

Protected by copyright. Copying for private or commercial purposes, in part or in whole, is not permitted unless authorized by Volkswagen AG. Volkswagen AG does not guarantee or accept any liability with respect to the correctness of information in this document. Copyright by Volkswagen AG.

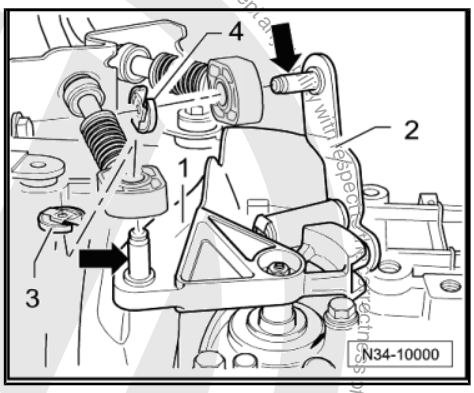

– Remove the gearshift cable lock washer -3- from the gearshift lever -1-.

– Remove the shift cable from the pins -arrow-.

Metal Relay Lever

– Remove the selector cable circlip -4- from the relay lever -2-.

– Remove the selector cable from the pins.

Plastic Relay Lever

– Remove the relay lever with the cable retainer. Refer to ⇒ “1.8 Plastic Relay Lever”, page 89 .

– Pry the cable retainer out. Refer to ⇒ Fig. ““Removing the Selector Cable Retainer from the Plastic Relay Lever.”“ , page 92 .

Continuation for All Shift Mechanisms

– Apply a small amount of grease on the pins on the transmission shift lever -arrows- -1- and on the relay lever -2-.

• Refer to the Parts Catalog for the grease allocation.

– Replace the lock washer -3- and the lock washer -4- on the metal relay lever each time they are removed.

– Attach the shift cable with lock washer -3- (metal relay lever) and selector cable with lock washer -4-.

Note

If a plastic relay lever is installed, it must be installed together with the cable retainer. Refer to *⇒ “1.8 Plastic Relay Lever”, page 89* .

– Adjust the gearshift mechanism. Refer to ⇒ “1.11 Selector Mechanism, Adjusting”, page 97 .

1.8 Plastic Relay Lever

A plastic relay lever is installed from 05/2007. Two versions may be installed.

♦ Relay lever with tab or

♦ Relay lever with clip

Note the following when removing and installing:

• To remove the relay lever, it is necessary to remove the cable retainer from the selector cable.

This prevents damage to the selector cable.

– Pull the securing mechanism all the way forward in direction of -arrow 1- and then unlock to the left in direction of -arrow 2-.

– Press the relay lever forward (in the direction of -arrow 3-).

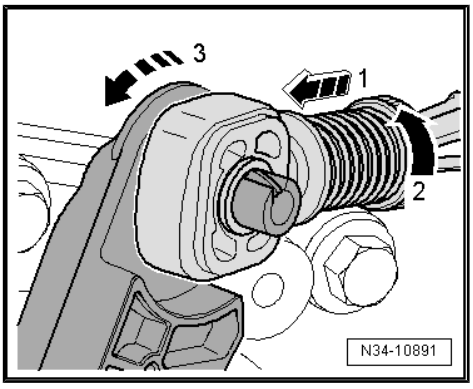

Relay Lever with Tab -arrow 1-

– Press the tab -arrow 1- down as far as the stop and remove the relay lever together with the cable retainer. Move it in the operating direction when doing so.

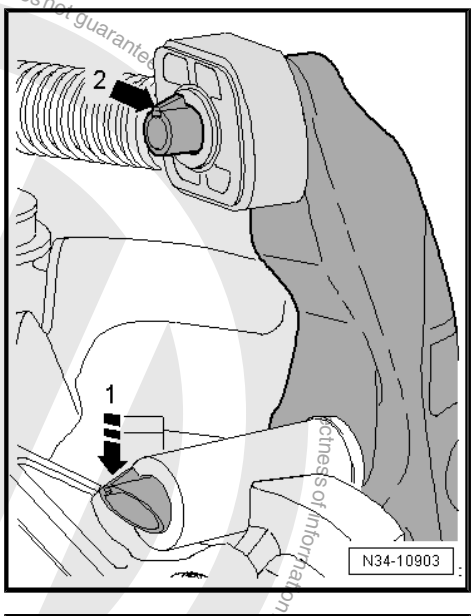

Relay Lever with Clip -arrow 1-.

– Remove the clip -arrow 1- and the relay lever together with the cable retainer.

Continuation for All

- The cable retainer must be behind the catch -arrow 2-.
- The cable retainer may only be removed with the relay lever removed. Refer to
⇒ Fig. ""Removing the Selector Cable Retainer from the Plastic Relay Lever."" , page 92 .

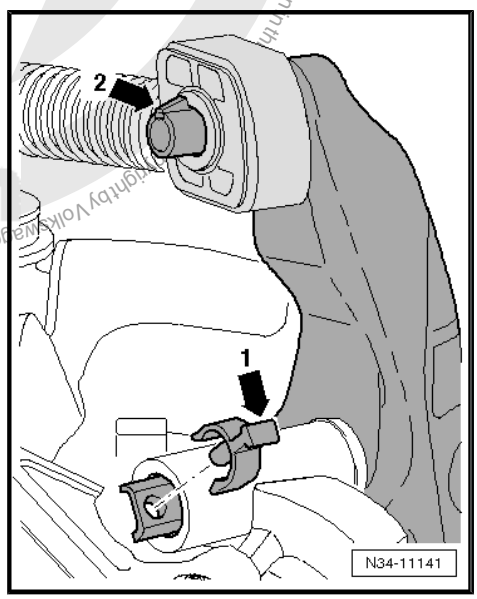

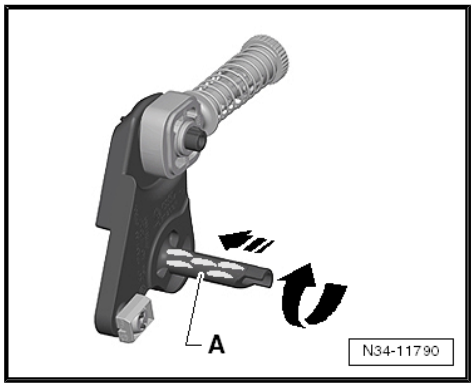

Protected by copyright. Copying for private or commercial purposes, in part or in whole, is not permitted unless authorised by Volkswagen AG. Volkswagen AG does not guarantee the accuracy and completeness of information in this publication.

Note

- *For installing, lubricate the following areas very carefully.*
- *Relay lever shaft -A- in direction of -arrows-.*
- *Gearshift lever glide track -B-, fits into the relay lever.*
- *The relay lever and gearshift lever in the illustration may differ from the original part.*
- *Refer to the Parts Catalog for the grease allocation.*

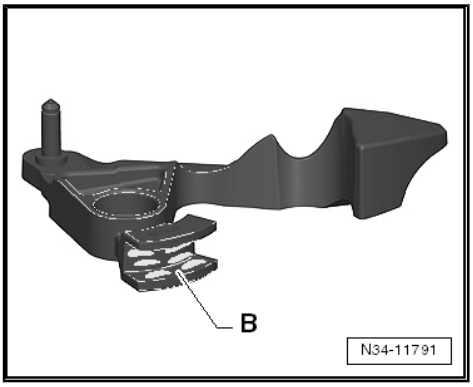

– Press the cable retainer on the relay lever. Refer to ⇒ Fig. ""Installing the Cable Retainer"" , page 92 .

– Insert the relay lever together with the cable retainer as far as the stop.

Relay Lever with Tab -arrow 1-

- The catch -arrow 1- secures the relay lever.
- Make sure it engages securely.
- The cable retainer must be behind the catch -arrow 2-.

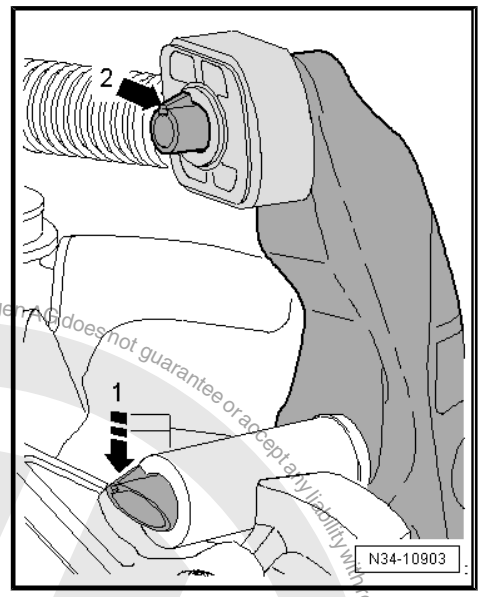

Relay Lever with Clip -arrow 1-.

- The clip -arrow 1- secures the relay lever.
- Make sure the clips locks securely.
- The cable retainer must be behind the catch -arrow 2-.

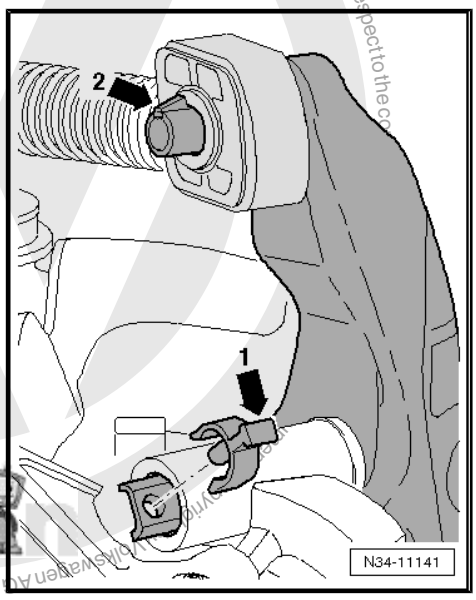

Protected by copyright. Copying for private or commercial purposes, in part or in whole, is not permitted unless authorised by Volkswagen AG. Volkswagen AG does not guarantee or accept any liability with respect to the co

Protected by copyright. Copyright by Volkswagen AG. Volkswagen AG does not guarantee or accept any liability with respect to the correctness of information in this document. Copying for private or commercial purposes, in part or in whole, is not permitted unless authorised by Volkswagen AG.

Removing the Selector Cable Retainer from the Plastic Relay Lever.

- The relay lever is removed.

– Insert a flat-blade screwdriver -A- between the bushing -B- and the relay lever.

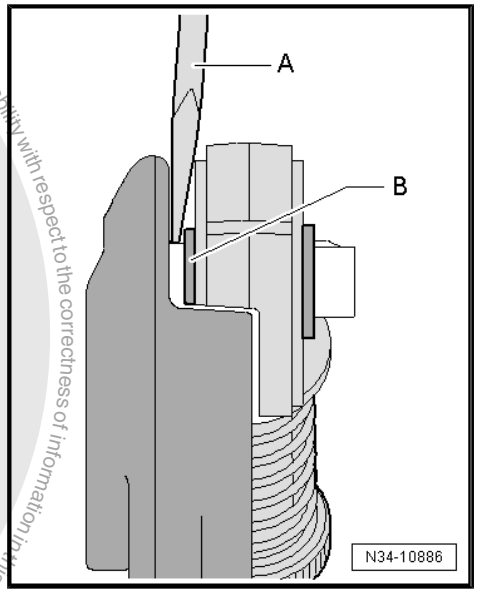

Installing the Cable Retainer

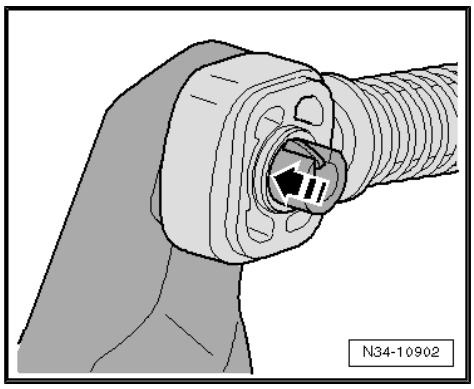

- The relay lever is removed.
- The cable retainer may only be installed at the bushing -arrow-.
- The cable retainer must move freely on the relay lever.
- It must be behind the tab -arrow 2-.

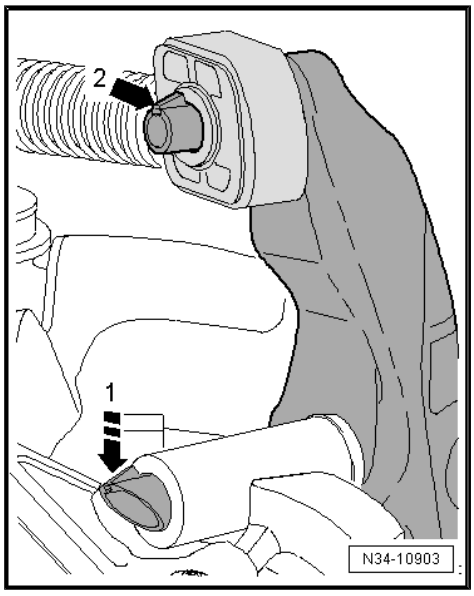

1.9 Selector Mechanism, Removing and Installing

Special tools and workshop equipment required

- ♦ Torque Wrench 1331 5-50Nm - VAG1331-
- ♦ Refer to the Parts Catalog for the grease allocation.

Removing

– First check whether a coded radio is installed. If so, obtain the anti-theft code.

– Disconnect the battery ground cable. Refer to ⇒ Electrical Equipment; Rep. Gr. 27 ; Battery; Battery, Disconnecting and Connecting .

– Remove the boot with the shifter knob and noise insulation. Refer to ⇒ “1.4 Boot with Shifter Knob and Noise Insulation, Removing and Installing”, page 79 .

– Remove the center console and the center console securing bracket. Refer to ⇒ Body Interior; Rep. Gr. 68 ; Center Console .

– Remove the nuts -arrows-.

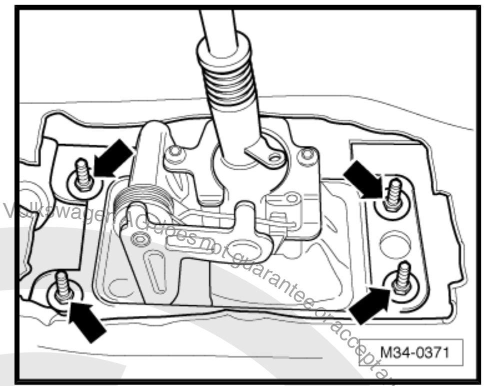

– Remove entire air filter housing if it is located over the selector mechanism. Refer to ⇒ Rep. Gr. 23 ; Diesel Direct Injection System; Air Filter Housing, Removing and Installing or ⇒ Rep. Gr. 24 ; Air Filter; Air Filter Housing, Removing and Installing .

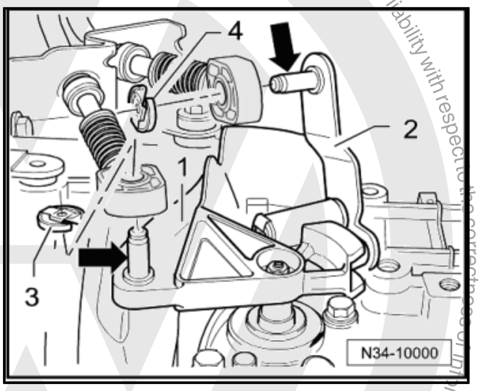

– Remove the gearshift cable lock washer -3- from the gearshift lever -1-.

– Remove the shift cable from the pins -arrow-.

Metal Relay Lever

– Remove the selector cable circlip -4- from the relay lever -2-.

– Remove the selector cable from the pins -arrow-.

Plastic Relay Lever

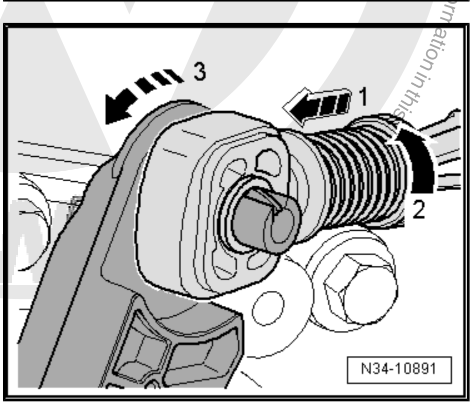

Disconnecting the Cable Retainer from the Selector Cable

• To avoid damage to the selector cable, the cable retainer must be disconnected from the selector lever before removal.

– Pull the securing mechanism all the way forward in direction of -arrow 1- and then unlock to the left in direction of -arrow 2-.

– Press the relay lever forward (in the direction of -arrow 3-).

– Remove the relay lever with the cable retainer. Refer to ⇒ “1.8 Plastic Relay Lever”, page 89 .

Continuation for All Shift Mechanisms

Protected by copyright. Copying for private or commercial purposes, in part or in whole, is not permitted unless authorised by Volkswagen AG. Volkswagen AG does not guarantee or accept any liability with respect to the correctness of information in this document.

– Remove the cable bracket from the transmission -arrows-.

– Remove the noise insulation. Refer to ⇒ Body Exterior; Rep. Gr. 50 ; Noise Insulation .

– Remove the tunnel braces. Refer to ⇒ Body Exterior; Rep. Gr. 50 ; Tunnel Brace .

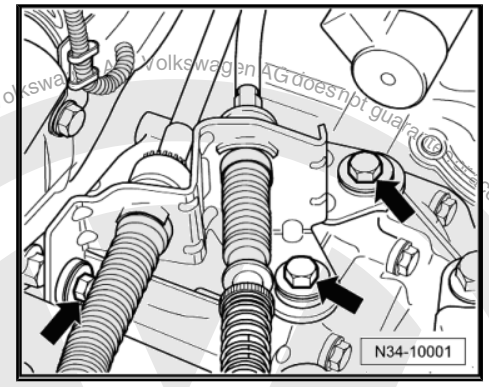

Vehicles with FWD

> **Caution**
>
> *Risk of damaging the decoupling element.*
>
> ♦ *Do not bend the decoupling element more than 10°.*
>
> ♦ *Do not load the decoupling element.*
>
> ♦ *Do not damage the wire mesh on the decoupling element.*

– Separate the front exhaust system front section at the double clamp and remove it from the subframe. Refer to ⇒ Rep. Gr. 26 .

– Disengage exhaust system rear section and secure to the body using for example using a wire. Remove the exhaust system rear section, if necessary.

AWD Vehicles

– Remove the rear muffler from the retaining straps and remove the rear section of the exhaust system.

– Remove the exhaust pipe. Refer to ⇒ Rep. Gr. 26 .

– Remove heat shield below the driveshaft.

– Remove the driveshaft. Refer to ⇒ Rear Final Drive; Rep. Gr. 39 .

Continuation for All

– Remove the underbody trim panel nuts -arrows-.

– Remove the lock washers -2 and 3-.

– Lower the underbody trim panel on the inside just enough until the heat shield -1- for the center tunnel can be removed.

– Pivot shift housing downward and remove with cables.

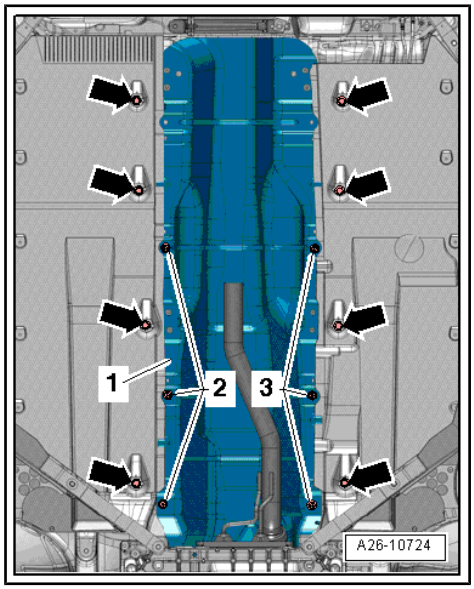

Installing

Install in reverse order of removal. Note the following:

– Align the shift housing so that it is parallel to the body.

• The distance on both sides to the body must be equal.

Install the gearshift housing. Refer to -item 26- ⇒ Item 26 (page 82) or -item 16- ⇒ Item 16 (page 84) .

– Attach the cable mounting bracket to the transmission and tighten the bolts to the tightening specifications -item 6- ⇒ Item 6 (page 86) and -item 10- ⇒ Item 10 (page 86) .

Protected by copyright. Copying for private or commercial purposes, in part or in whole, is not permitted unless authorised by Volkswagen AG. Volkswagen AG does not guarantee or accept any liability with respect to the correctness of information in this document. Copyright by Volkswagen AG.

– Route the cables -1- from the shift mechanism -2- to the transmission as follows:

• The cables must run parallel to each other and must not cross each other.

• The cables must be routed inside the depression in the heat shield -3-.

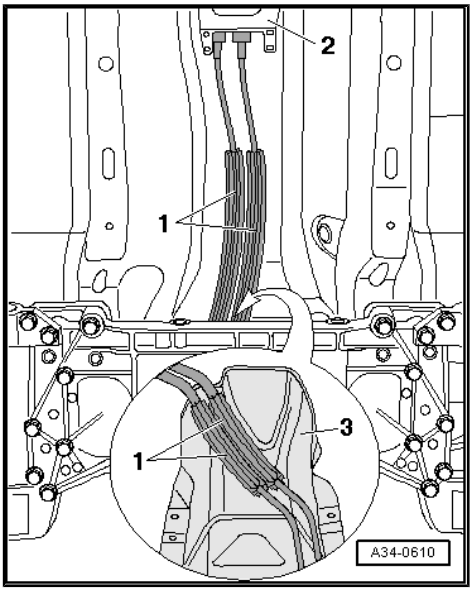

Note

The heat shield from above is shown in the magnified view.

A clip -A- holds the cables and heat shield to each other in place.

These holes have different diameters.

Cable retainer allocation. Refer to
⇒ Fig. ""Cable Retainer Allocation"" , page 87

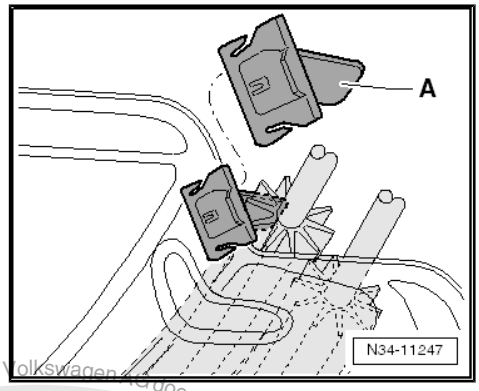

– Apply a small amount of grease on the pins on the transmission shift lever -arrows- -1- and on the relay lever -2-.

• Refer to the Parts Catalog for the grease allocation.

– Replace the lock washer -3- and the lock washer -4- on the metal relay lever each time they are removed.

– Secure shift cable with lock washer -3- and selector cable with lock washer -4-.

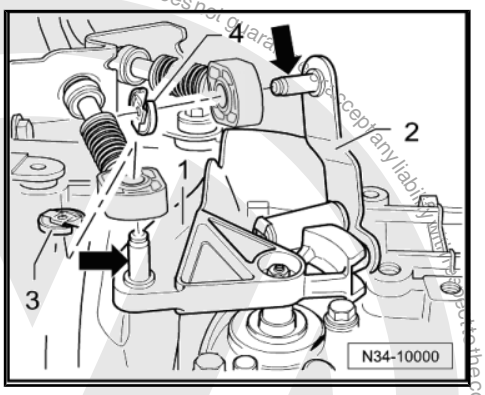

Cable Retainer with Plastic Relay Lever

– The relay lever and cable retainer must be installed together. Refer to ⇒ "1.8 Plastic Relay Lever", page 89 .

– Insert the selector cable into the cable retainer.

Continuation for All Shift Mechanisms

– Install the bracket and the center console. Refer to ⇒ Body Interior; Rep. Gr. 68 ; Center Console .

– Install the boot with the shifter knob and noise insulation. Refer to
⇒ "1.4 Boot with Shifter Knob and Noise Insulation, Removing and Installing", page 79 .

Protected by copyright. Copyright for private and commercial purposes, in part or in whole, is not permitted unless authorised by Volkswagen AG. Volkswagen AG does not guarantee or accept any liability with respect to the correctness of information in this document. Copyright by Volkswagen AG.

– Install the heat shield -1- under the selector mechanism and attach with the lock washers -2 and 3-.

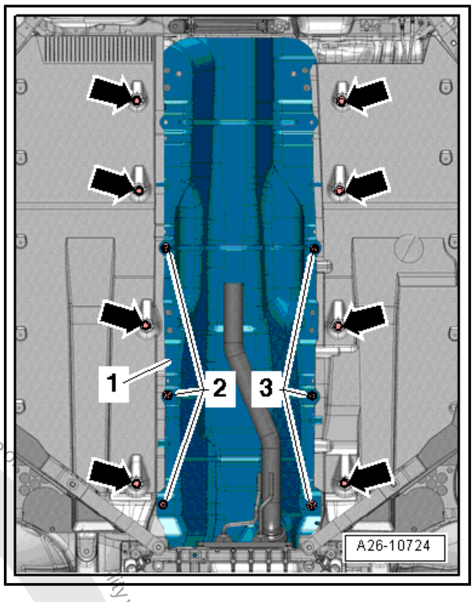

– Attach the underbody trim panel to the body -arrows-. Refer to ⇒ Body Exterior; Rep. Gr. 50 ; Underbody Trim Panels .

AWD Vehicles

– Install the driveshaft. Refer to ⇒ Rear Final Drive; Rep. Gr. 39 .

Continuation for All

– Install the exhaust system and align it without tension. Refer to ⇒ Rep. Gr. 26 .

– Install the tunnel braces under the exhaust system. Refer to ⇒ Body Exterior; Rep. Gr. 50 ; Tunnel Brace .

– Adjust the gearshift mechanism. Refer to ⇒ “1.11 Selector Mechanism, Adjusting”, page 97 .

– If it was removed earlier install the complete air filter housing. Refer to ⇒ Rep. Gr. 23 ; Diesel Direct Injection System; Air Filter Housing, Removing and Installing or ⇒ Rep. Gr. 24 ; Air Filter; Air Filter Housing, Removing and Installing .

– Complete the steps after connecting the battery. Refer to ⇒ Electrical Equipment; Rep. Gr. 27 ; Battery; Battery, Disconnecting and Connecting .

1.10 Gearshift Cable and Selector Cable, Removing and Installing

Removing

– Remove the selector mechanism. Refer to ⇒ page 93 .

– Bend up the tabs -arrows- on the shift mechanism base plate using a screwdriver and remove the base plate. Only the straps on the left side of the base plate are shown in the illustration.

– Remove the seal.

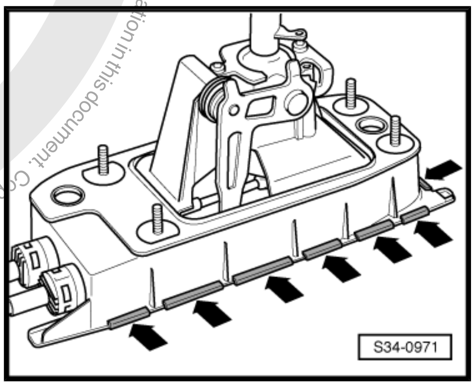

– Remove the lock washers -1 through 4-.

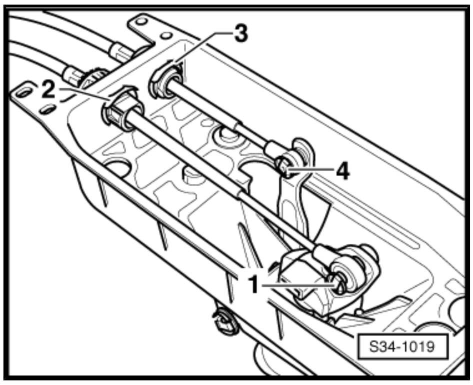

Note

Lock washers -1 and 4- are no longer installed in shift mechanisms beginning in 11/2006.

– Pry off the shift cable (or the selector lever cable) from the gearshift lever (or selector lever) with a screwdriver.

– Remove the shift cable and selector cable from the shift housing.

Protected by copyright. Copying for private or commercial purposes, in part or in whole, is not permitted unless authorised by Volkswagen AG. Volkswagen AG does not guarantee or accept any liability with respect to the correctness of information in this document. Copyright by Volkswagen AG.

Release the retainers -A- for the shift and selector cables -B- as follows:

- ♦ Push the sleeve forward as far as it will go in direction of -arrow 1-.
- ♦ Turn the sleeve to the right as far as it will go in direction of -arrow 2- until it engages.
- – Remove the retainers from the cables.

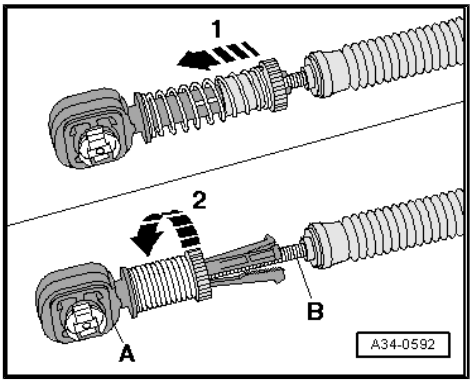

- – Remove the lock washers -1 and 2-.
- – Remove the cable bracket from the cables.

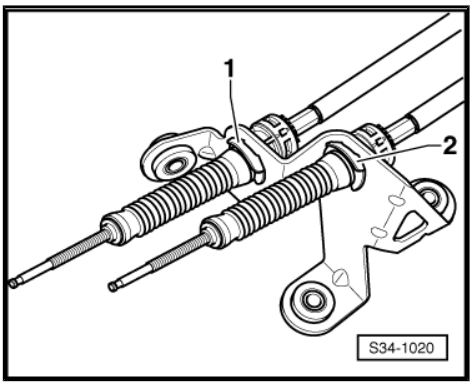

Installing

Install in reverse order of removal while. Note the following:

- – Secure the shift cable and selector cable on the shift housing with lock washers -2 and 3-.
- – Attach the shift cable and the selector cable to the gearshift lever and the selector lever inside the shift housing and secure it with lock washers -1 and 4-.

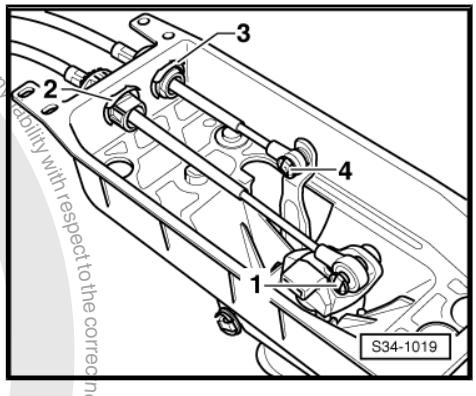

Note

Lock washers -1 and 4- are no longer installed in shift mechanisms beginning in 11/2006.

- – Install the base plate with a new seal on the gearshift housing -arrows-. Refer to ⇒ Fig. ""Base Plate, Attaching to Gearshift Housing"", page 105 .
- – Install the gearshift mechanism. Refer to ⇒ page 94 .
- – Adjust the gearshift mechanism. Refer to ⇒ "1.11 Selector Mechanism, Adjusting", page 97 .

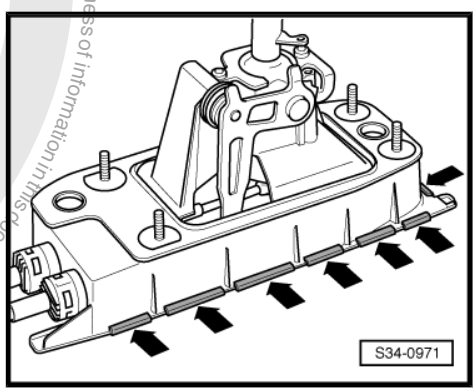

Protected by copyright. Copying for private or commercial purposes, in part or in whole, is not permitted unless authorised by Volkswagen AG. Volkswagen AG does not guarantee or accept any liability with respect to the correctness of information in this document. Copyright by Volkswagen AG.

1.11 Selector Mechanism, Adjusting

Connecting Pin - T10027A-

Note

- *The following is important to make sure the gearshift adjustment is correct:*
- *Operating and transfer elements of shift mechanism must be in proper condition.*
- *Shift mechanism must move freely.*
- *The transmission, clutch and clutch mechanism must also be in proper condition.*

- Transmission in neutral.

– Remove the entire air filter housing if the bracket -A- for the selector shaft and the securing mechanism for the shift and selector cables are not accessible through it. Refer to ⇒ Rep. Gr. 23 ; Diesel Direct Injection System; Air Filter Housing, Removing and Installing or ⇒ Rep. Gr. 24 ; Air Filter; Air Filter Housing, Removing and Installing .

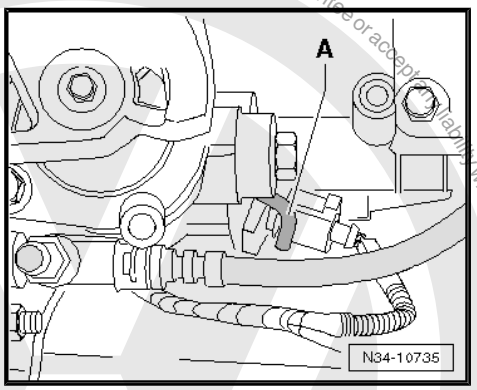

– Pull the safety mechanism on the cable retainer for the shift cable and the selector cable all the way forward in direction of -arrow 1- and then lock it to the left in direction of -arrow 2-.

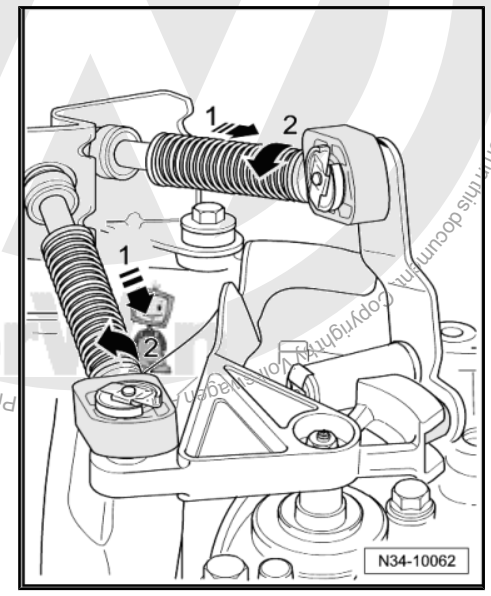

Hold the gearshift shaft secure as follows:

– Push the gearshift shaft in direction of -arrow 1-.

– While pressing down selector shaft, rotate lock bolt -A- upward in direction of -arrow 3- and simultaneously press it in direction of -arrow 2- until it engages in selector shaft.

– Remove the boot with the shifter knob and frame. Refer to ⇒ “1.4 Boot with Shifter Knob and Noise Insulation, Removing and Installing”, page 79 .

– If equipped, remove the noise insulation.

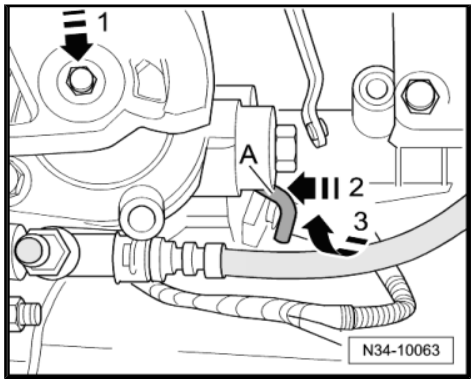

Protected by copyright. Copying for private or commercial purposes, in part or in whole, is not permitted unless authorised by Volkswagen AG. Volkswagen AG does not guarantee or accept any liability with respect to the correctness of information in this document. Copyright by Volkswagen AG.

Hold the gearshift shaft secure as follows:

– Move the gearshift lever into neutral.

– Guide the Connecting Pin - T10027A- through the hole -A- and into the hole -B-.

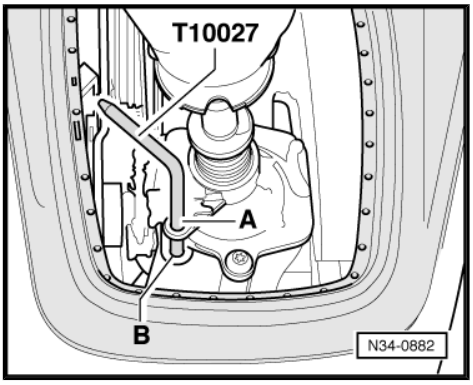

– Make sure the selector and shift cable -B- are inserted into the retainer -A- without tension.

– Turn the locking mechanism on the shift cable retainer and the selector shaft all the way to the right in direction of -arrow 1-.

The spring will push the safety mechanism into the starting position in direction of -arrow 2-.

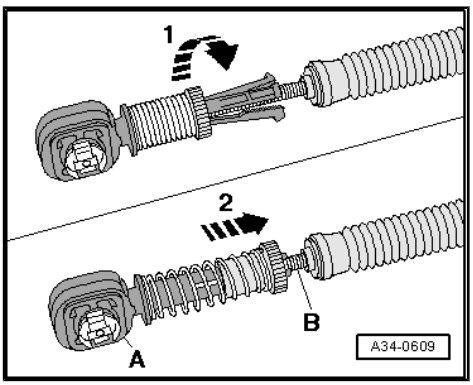

– Turn the bracket -A- back into the starting position -arrow 2-.

• The bracket -A- must get pushed out of the transmission in direction of -arrow 1-.

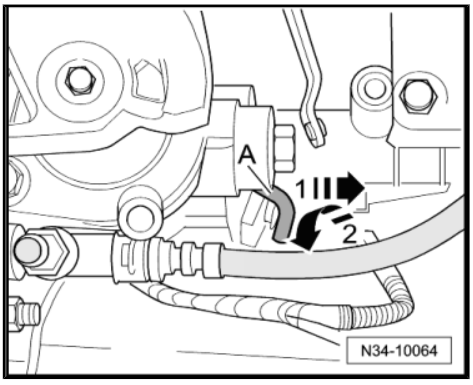

Protected by copyright. Copying for private or commercial purposes, in part or in whole, is not permitted unless authorised by Volkswagen AG. Volkswagen AG does not guarantee or accept any liability with respect to the correctness of information in this document. Copyright by Volkswagen AG.

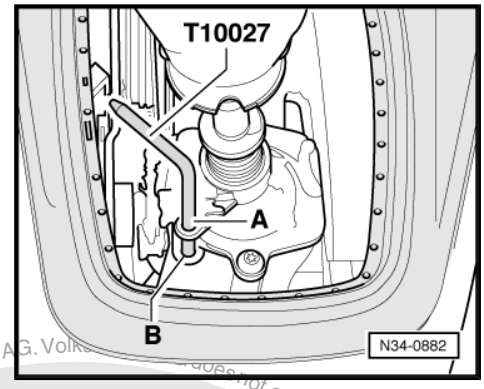

– Pull the Connecting Pin - T10027A- out of the holes -A and B-.
– If equipped, install the noise insulation.
– Install the boot, the gearshift knob and the frame. Refer to ⇒ “1.4 Boot with Shifter Knob and Noise Insulation, Removing and Installing”, page 79 .
– Make sure the gearshift shaft moves easily.
– If it was removed earlier install the complete air filter housing. Refer to ⇒ Rep. Gr. 23 ; Diesel Direct Injection System; Air Filter Housing, Removing and Installing or ⇒ Rep. Gr. 24 ; Air Filter; Air Filter Housing, Removing and Installing .

Function

- The shift lever must rest in the 3rd/4th gear selector lever gate when the transmission is in neutral.

– Operate the clutch.
– Move the gearshift lever (selector lever) several times through all the gears. Pay particular attention to the operation of the reverse gear lock.
– Should a gear fail to engage smoothly after repeated selection, adjust the gearshift mechanism again. Refer to ⇒ “1.11 Selector Mechanism, Adjusting”, page 97 .

1.12 Selector Mechanism, Disassembling and Assembling, from 11/2006

Special tools and workshop equipment required

♦ Window Release Tool - T10236-
♦ Press Piece - Multiple Use - VW412-
♦ Over-Center Spring Assembly Tool - T10178- or flat iron, 200 x 25 x 5 mm
♦ Engine Support Bridge - Engine Support 25 - 10-222A/25- or flat iron, 350 X 30 X 5 mm
♦ - 4- = Puller - Counterstay , for example -Kukko 22/4-
♦ Wedge - T10357-
♦ Press Piece - Block - T10083-
♦ Allocate the grease for gearshift mechanism. Refer to the Parts Catalog.

Disassembling

– Remove gearshift mechanism. Refer to ⇒ “1.9 Selector Mechanism, Removing and Installing”, page 92 .

Protected by copyright. Copying for private or commercial purposes, in part or in whole, is not permitted unless authorised by Volkswagen AG. Volkswagen AG does not guarantee or accept any liability with respect to the correctness of information in this document. Copyright by Volkswagen AG.

– Bend up the selector mechanism base plate straps -arrows- with a screwdriver and remove the base plate. Only the straps on the left side of the base plate are shown in the illustration.

– Remove seal from shift housing.

– Remove shift cable and selector cable from selector housing. Refer to ⇒ “1.7 Overview - Operating Cables”, page 85 .

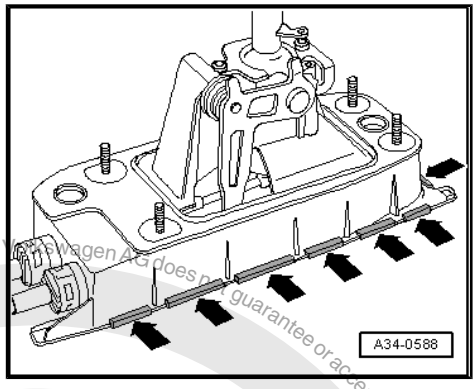

– Raise upper side of spring -A- over selector bracket tab.

– Using a screwdriver, press bearing shell notches -arrows- in direction of shift lever guide bearing; break off notches if necessary.

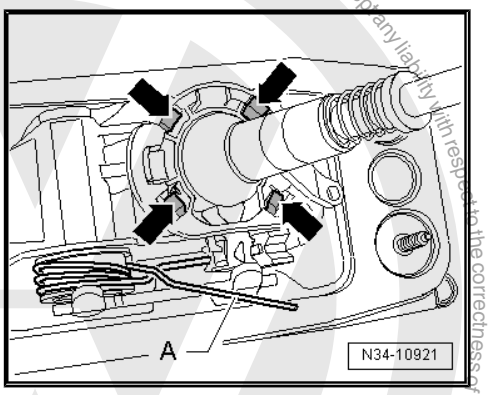

– Pry out bearing shell -A- with shift lever guide -B- from selector housing.

– Then press bearing shell off shift lever guide bearing and remove.

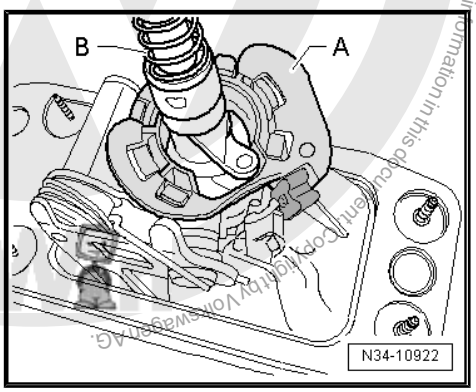

• Observe guides -A- in subsequent steps.

• They must not break off.

– Raise lower side in direction of -arrow 1- of spring as far as stop onto shoulder on selector bracket.

– Now raise shift lever guide up as far as stop and remove ball studs from selector bracket in direction of -arrow 2-.

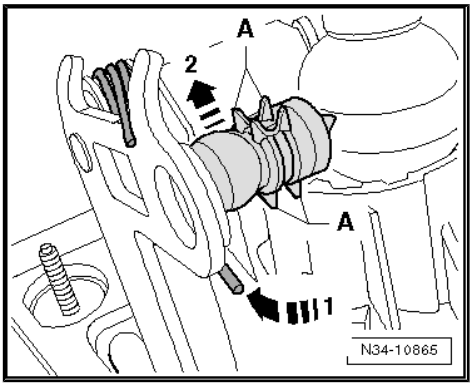

Protected by copyright. Copying for private or commercial purposes, in part or in whole, is not permitted unless authorised by Volkswagen AG. Volkswagen AG does not guarantee or accept any liability with respect to the correctness of information in this document. Copyright by Volkswagen AG.

Protected by copyright. Copyright by Volkswagen AG. Volkswagen AG does not guarantee or accept any liability with respect to the correctness of information in this document. Copying for private or commercial purposes, in part or in whole, is not permitted unless authorised by Volkswagen AG.

– Turn the gearshift lever in the direction of -arrow 1-.
• The pins -arrow 2- must be in the shift housing opening.
– Move the gearshift lever guide and the gearshift lever in the direction of -arrow 3-.

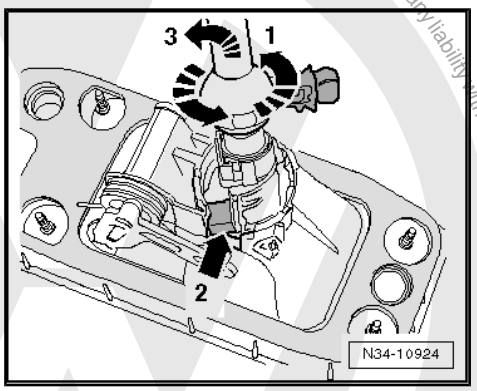

Assembling

Caution

The lower side of the spring in direction of -arrow 1 -can spring down uncontrolled from the selector bracket shoulder during subsequent handling.

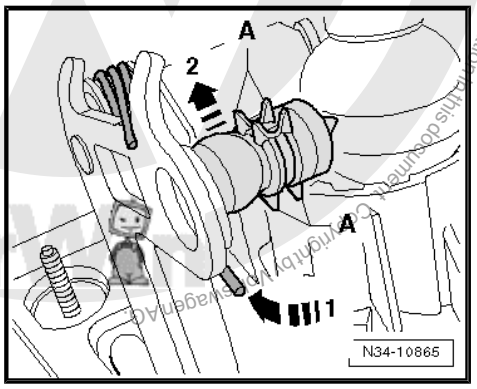

– Carefully press it down from the selector bracket shoulder.

The spring sides then twist “diagonally” with a loud noise.

– Turn both springs to the right and release the tension on the ends -A and B-.
• The ends -A and B- must face in the opposite direction.

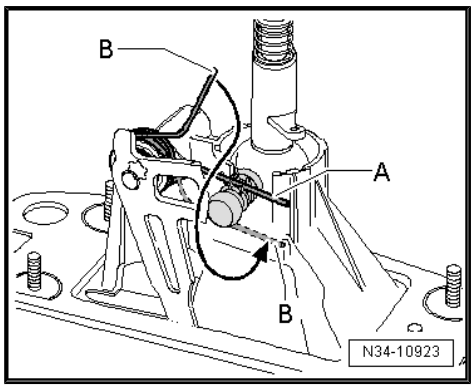

Note

The selector shaft must be removed in order to insert the shifter housing with the selector shaft guide into the Pressing Support .

– Install the shift lever guide into the shift housing.
• The pins -arrow 1- are still located in the shift housing opening.
– Turn the gearshift lever guide in the direction of -arrow 2- until the ball head pin -A- is above the opening in the gearshift housing.

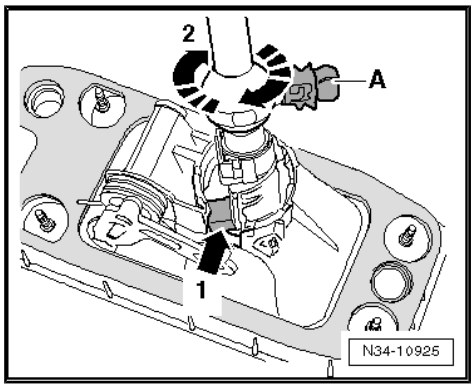

– Install the gearshift housing with gearshift lever guide into the larger depression -arrow- in the Press Piece - Block - T10083- .

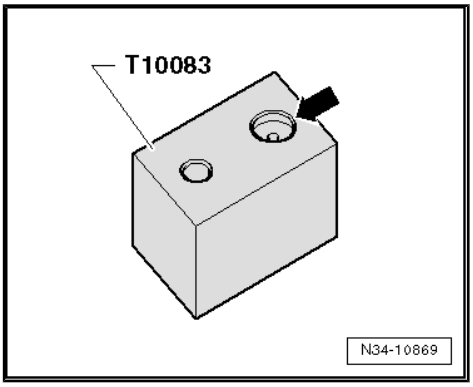

Note

The selector shaft must be removed in order to insert the shifter housing with the selector shaft guide into the Pressing Support .

• The shift lever guide must project out of selector housing as far as stop.

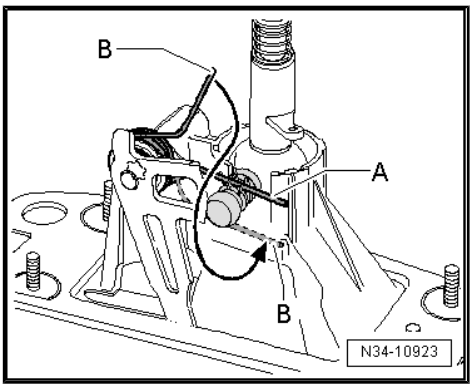

Note

The selector bracket is only partially shown to provide a better illustration.

– Insert spring side -A- from above into guide.

– Pull spring side -B- down and insert it near the guide (in direction of ball head).

– Carefully remove the gearshift housing with the shift lever guide from the Press Piece - Block - T10083- .

– Move selector bracket back as far as stop (opposite mounting holes for shifter and selector cable) in direction of -arrow 1-.

– Lubricate ball head pins.

– Press ball head pins into selector bracket -arrow 2-.

• The guides -A- and the tabs -B- must not be damaged.

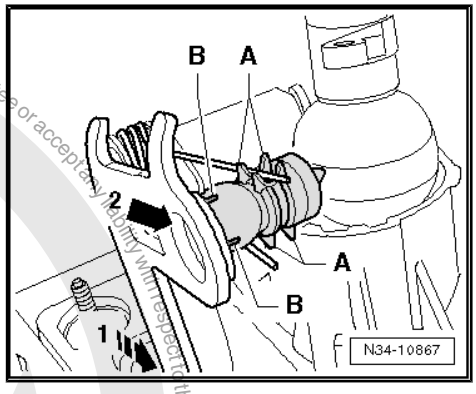

– Install the gearshift housing with gearshift lever guide into the larger depression -arrow- in the Press Piece - Block - T10083- .

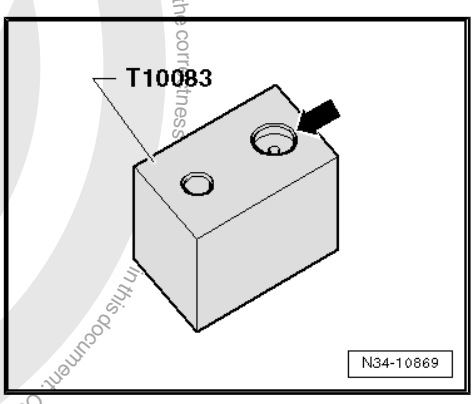

Protected by copyright. Copying for private or commercial purposes, in part or in whole, is not permitted unless authorised by Volkswagen AG. Volkswagen AG does not guarantee or accept any liability with respect to the correctness of information in this document. Copyright by Volkswagen AG.

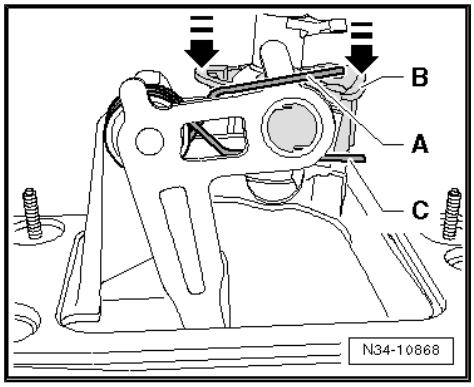

- The shift lever guide must project out of selector housing as far as stop.
- – Raise upper side of spring -A- over selector bracket pins.
- Use a new bearing shell -B-.
- – Lubricate bearing shell and shift lever guide bearing.
- – Press bearing shell onto shift lever guide bearing as far as stop.
- – Remove selector mechanism from Press Piece - Block - T10083- .
- – Insert lower side -C- of spring into guide.
- – Raise upper side of spring -A- over selector bracket pins into guide.
- – Press bearing shell into selector housing -arrows-.
- All four retaining tabs must engage.
- – If equipped install the shift lever in the shift housing.
- – Secure the shift cable and selector cable on the shift housing with lock washers -2 and 3-.
- – Install the shift cable -1- on the gearshift lever and selector cable -4- on the selector lever inside the shift housing.

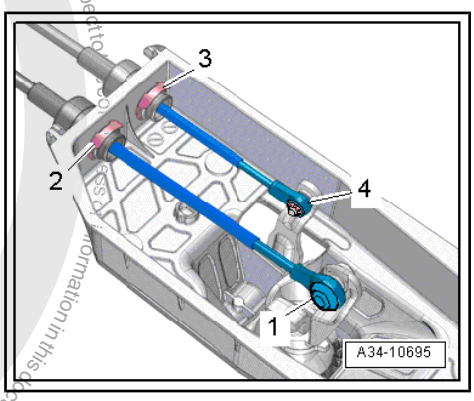

Protected by copyright. Copying for private or commercial purposes, in part or in whole, is not permitted unless authorised by Volkswagen AG. Volkswagen AG does not guarantee or accept any liability with respect to the correctness of information in this document. Copyright by Volkswagen AG.

Base Plate, Attaching to Gearshift Housing

– Install a new seal -item 2- ⇒ Item 2 (page 84) on the base plate.

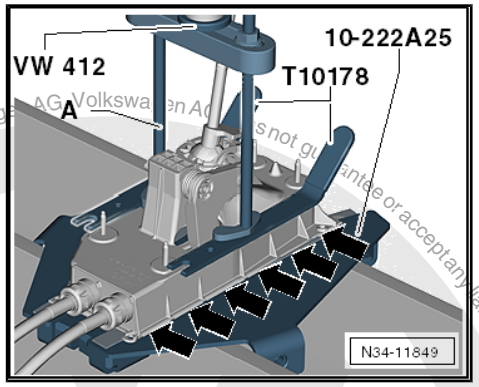

Caution

There is a danger of causing damage to the gearshift housing and base plate.

Tension the gearshift housing only slightly.

– Bend the tabs -arrow- back over all around the base plate to secure it (only the tabs on the left side of the base plate are shown in the illustration).

Note

- *If only one Over-Center Spring Assembly Tool - T10178- is available, instead of a second Over-Center Spring Assembly Tool - T10178- the Toothed Belt Tensioner - T10020- can be used.*
- *A 200 x 25 x 5 mm flat iron can be used in place of an Over-Center Spring Assembly Tool - T10178-.*
- *A 350 X 30 X 5 mm flat iron can be used in place of an Engine Support Bridge - Engine Support 25 - 10-222A/25- .*

– The tabs can be bent back over using the Wedge - T10357- .

- A- = Puller - Counterstay , for example -22/4-

– Glue a new seal on the gearshift housing .

– Install the gearshift mechanism. Refer to ⇒ “1.9 Selector Mechanism, Removing and Installing”, page 92 .

Protected by copyright. Copying for private or commercial purposes, in part or in whole, is not permitted unless authorised by Volkswagen AG. Volkswagen AG does not guarantee or accept any liability with respect to the correctness of information in this document. Copyright by Volkswagen AG.

2 Transmission, Removing and Installing, Jetta from MY 2005 , Golf Wagon from MY 2007 and Golf Wagon from MY 2010, Vehicles with Diesel Engine and FWD

⇒ “2.1 Transmission, Removing and Installing”, page 106

⇒ “6 Transmission, Transporting”, page 189

⇒ “2.2 Tightening Specifications”, page 124

2.1 Transmission, Removing and Installing

Special tools and workshop equipment required

- Support Elements for transmission (determine when mounting the Mounting Plate on the Transmission Support)
- Transmission Support - Mounting Plate 33 - 3282/33-
- Transmission Support Jig - 3336- to transport the transmission.
- Torque Wrench 1331 5-50Nm - VAG1331-
- Torque Wrench 1332 40-200Nm - VAG1332-
- Engine and Gearbox Jack - VAS6931-
- Engine Support Bridge - Gearbox Bracket - T10346-
- Engine Support Device - 3300A-
- Slide Hammer Set - Adapter 40 - VW771/40-
- Hose Clamps - Up To 25 mm - 3094-
- Grease for Clutch Disc Shaft Splines - G 000 100-
- Engine Support Bridge - 10-222A-
- Engine Support Bridge - Engine Support Feet - 10-222A/8-
- Engine Support Bridge - Engine Support 3 - 10-222A/3-
- Engine Support Bridge - Engine Support 18 - 10-222A/18-
- Transmission Support - 3282-
- Allocate the grease for gearshift mechanism. Refer to the Parts Catalog.
- M6 x 20 collar bolt
- M6 x 80 collar bolt
- M10 x 20 hex bolt

Removing

The Engine Support Bridge - 10-222A- and the Engine Support Bridge - Engine Support Feet - 10-222A/8- will be mounted on the longitudinal members later in the procedure.

Protected by copyright. Copying for private or commercial purposes, in part or in whole, is not permitted unless authorised by Volkswagen AG. Volkswagen AG does not guarantee or accept any liability with respect to the correctness of information in this document. Copyright by Volkswagen AG.

- To protect the edges of the fender, cover both Engine Support Bridge - Engine Support Feet - 10-222A/8- with cloth tape -arrow-. Refer to the Parts Catalog (Chemical Materials).

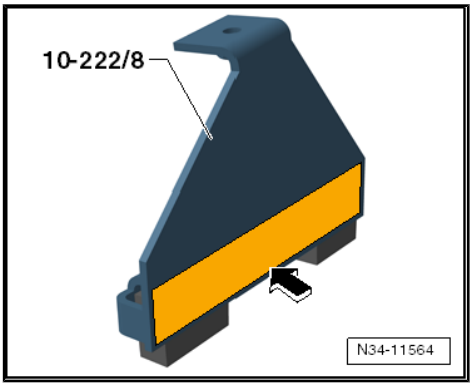

– See if a coded radio is installed. If so, obtain the anti-theft code.

– Disconnect the battery ground cable. Refer to ⇒ Electrical Equipment; Rep. Gr. 27 ; Battery; Battery, Disconnecting and Connecting .

Later in the procedure, the Engine Support Bridge - 10-222A- is connected to the engine lifting eyes.

– Remove the engine cover if it is blocking the lifting eyes.

– Remove the air filter housing if it is located near the battery. Refer to ⇒ Rep. Gr. 23 ; Diesel Direct Injection System; Air Filter Housing, Removing and Installing .

– Remove the battery, the battery cover and the battery tray. Refer to ⇒ Electrical Equipment; Rep. Gr. 27 ; Battery; Battery, Removing and Installing .

– Remove the shift cable lock washer -3- from the transmission shift lever -1- and remove the cable from the pin -arrow-.

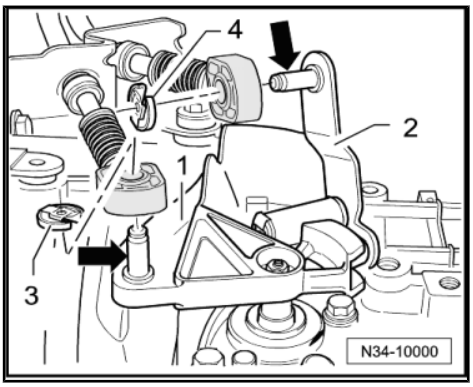

Metal Relay Lever

– Remove the selector cable lock washer -4- from the relay lever -2- and remove the cable from the pin -arrow-.

Plastic Relay Lever

– Remove the cable retainer from the selector cable.

- To avoid damage to the selector cable, the cable retainer must be disconnected from the selector lever before removal.

– Pull the securing mechanism all the way forward in direction of -arrow 1- and then unlock to the left in direction of -arrow 2-.

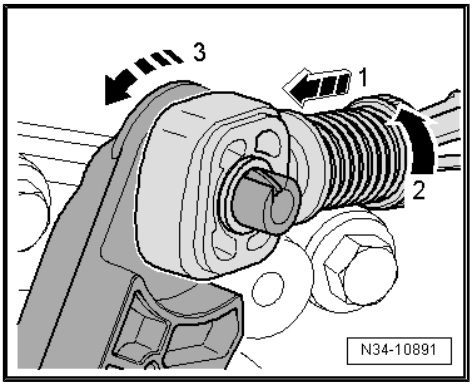

Press the relay lever forward (in the direction of -arrow 3-).

– The relay lever is removed together with the cable retainer later in the procedure.

– Remove the cable bracket from the transmission -arrows-, tie up to the side.

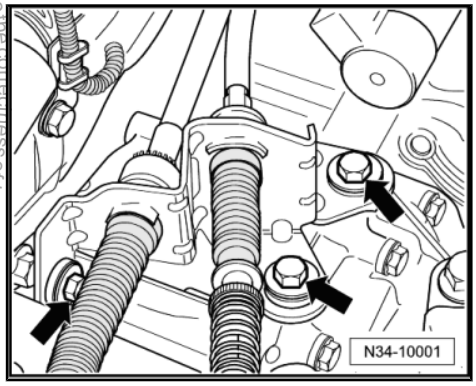

Protected by copyright. Copyright for private or commercial purposes, in part or in whole, is not permitted unless authorised by Volkswagen AG. Volkswagen AG does not guarantee or accept any liability with respect to the correctness of information in this document. Copyright by Volkswagen AG.

Vehicles with A Pipe between the Clutch Master and Slave Cylinders

– Clamp the clutch master cylinder hose using a Hose Clamps - Up To 25mm - 3094- .

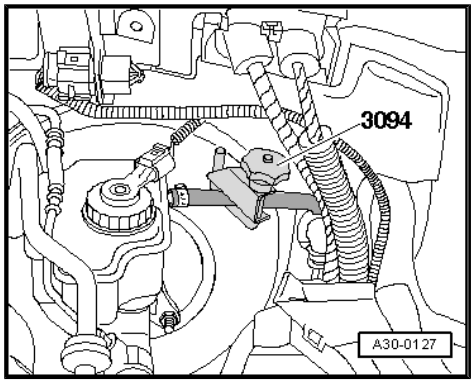

Vehicles with A Hose/Line Assembly between the Clutch Master and Slave Cylinders

– Clamp off the hose on the hose/line assembly -A- to the clutch slave cylinder using the Hose Clamps - Up To 25mm - 3094- .

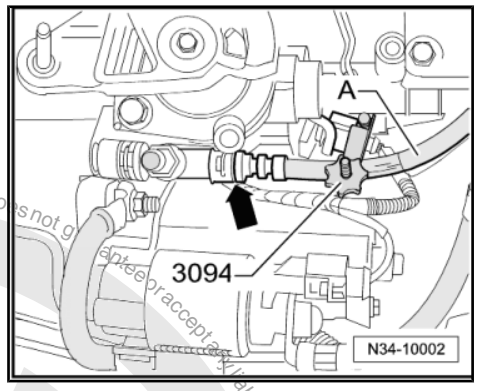

Continuation for All

– Pull the clamp -arrow- for the hose/line assembly or the pipe out all the way to the stop.

– Remove the hose/line assembly or pipe from the bleeder/ clutch slave cylinder and seal it off.

> ⚠ **Caution**
>
> *Do not press the clutch pedal anymore.*

– Remove the ground strap -1- from the top starter bolt.

– Disconnect the connector -2- from the Back-Up Lamp Switch - F4- .

– Disconnect the connector and the wire from the starter.

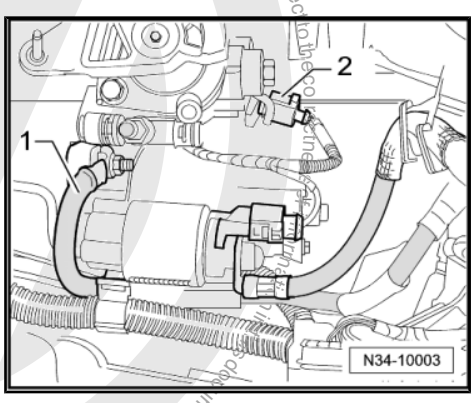

– Remove the upper engine/transmission connecting bolts -arrows-.

– Remove the upper bolt from the starter.

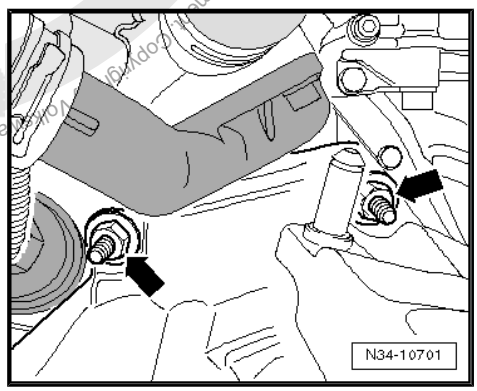

Protected by copyright. Copying for private or commercial purposes, in part or in whole, is not permitted unless authorised by Volkswagen AG. Volkswagen AG does not guarantee or accept any liability with respect to the correctness and completeness of this document. Copyright by Volkswagen AG.

Protected by copyright. Copying for private or commercial purposes, in part or in whole, is not permitted unless authorised by Volkswagen AG. Volkswagen AG does not guarantee or accept any liability with respect to the correctness of information in this document.

– Install the Engine Support Bridge - Gearbox Bracket - T10346- in the most rear hole out of the three holes in the battery tray.

– Use a collar bolt M6 x 80 or one of the battery tray bolts for this.

– If there are hose and cable connections located near the engine lifting eyes for the Engine Support Bridge - 10-222A- , these must now be removed.

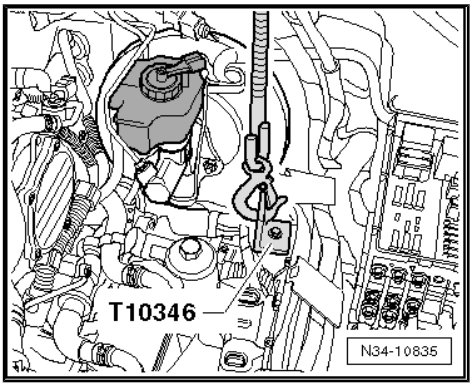

– Position the Engine Support Bridge - 10-222A- in front of the hood support.

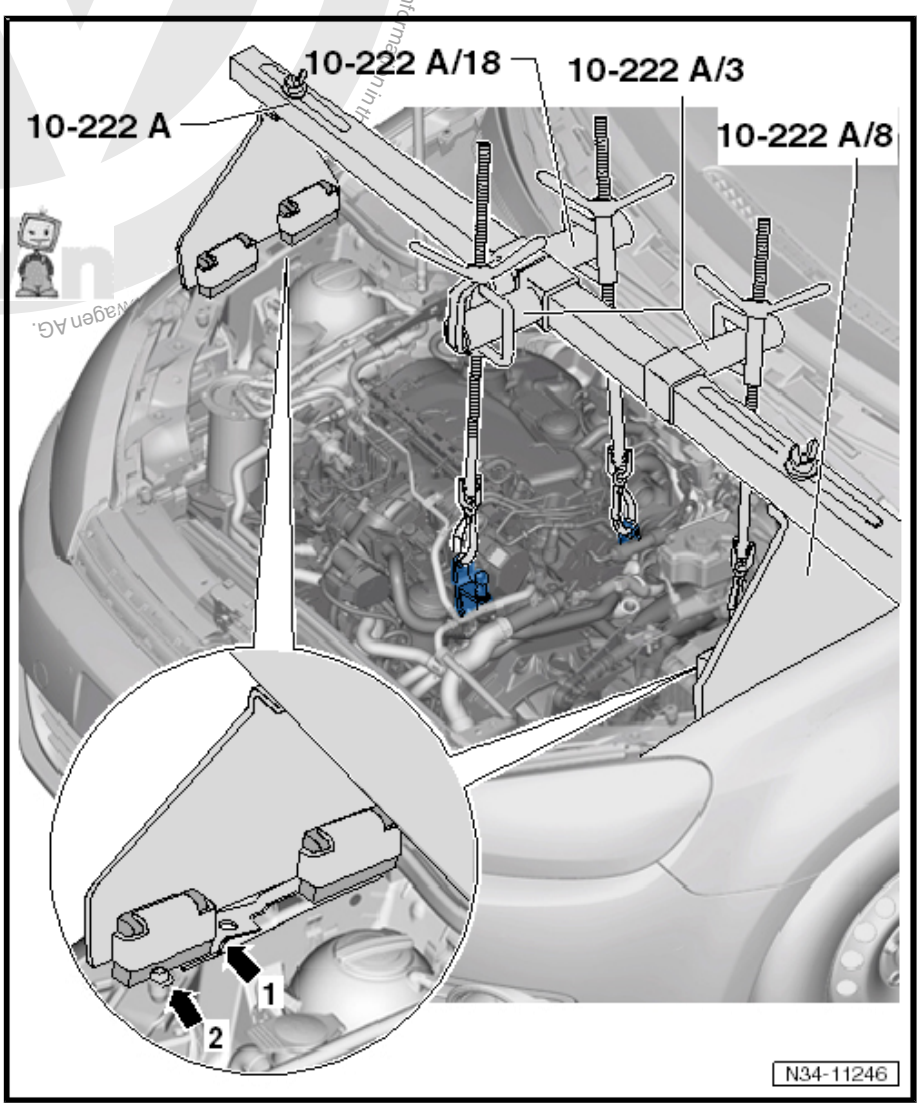

– Use:

– Position the Engine Support Bridge - Engine Support Feet - 10-222A/8- :

– Then connect the Engine Support Bridge - Gearbox Bracket - T10346- to the Engine Support Bridge .

– Hook the Spindles into the left lifting eye on the engine.

– Pretension the engine/transmission assembly and Engine Support Bridge - 10-222A- via the spindles.

The left drive axle must be removed later in the procedure.

– With the vehicle still standing on its wheels, loosen the left front collar bolt -arrow- a maximum 90°, otherwise the wheel bearing will get damaged. Refer to ⇒ Suspension, Wheels, Steering; Rep. Gr. 40 ; Drive Axles, Removing and Installing .

– Remove the noise insulation. Refer to ⇒ Body Exterior; Rep. Gr. 50 ; Noise Insulation .

– Remove the lower part of the left front wheel housing liner. Refer to ⇒ Body Exterior; Rep. Gr. 66 ; Wheel Housing Liner .

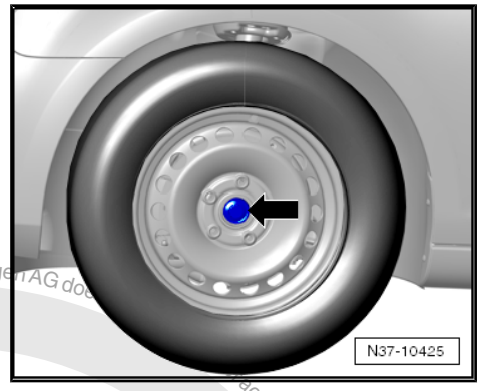

– Transmission on vehicles with Start/Stop System: disconnect the connector -arrow- from the Transmission Neutral Position Sensor - G701- .

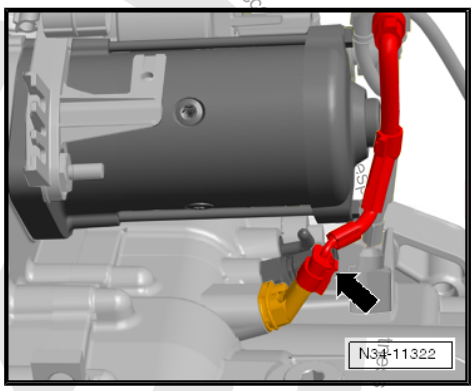

– Remove the Left Front Level Control System Sensor - G78- from the control arm, if equipped. Refer to ⇒ Rep. Gr. 40 .

– Remove the bracket from the starter.

– Remove the starter. Refer to ⇒ Electrical Equipment; Rep. Gr. 27 ; Starter; Starter, Removing and Installing .

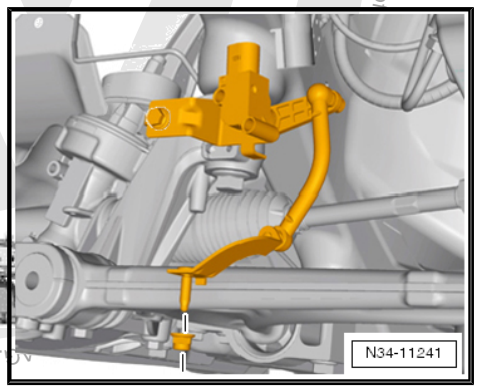

– Remove the left charge air hose -arrow 1- and -arrow 2- ⇒ Rep. Gr. 21 .

– Remove the charge air pipe from the engine. Refer to ⇒ Rep. Gr. 21 .

– Remove the right charge air hose from the charge air cooler. Refer to ⇒ Rep. Gr. 21 .

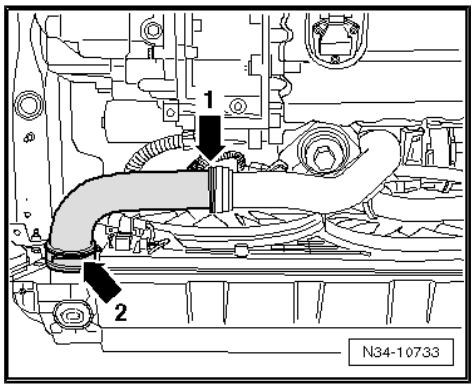

Protected by copyright. Copying for private or commercial purposes, in part or in whole, is not permitted unless authorised by Volkswagen AG

– Remove the air shroud -arrow- and the radiator fans. Refer to ⇒ Rep. Gr. 19

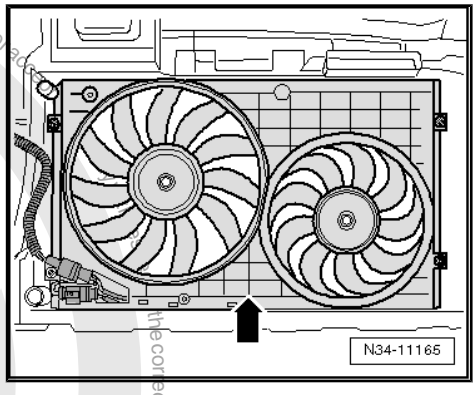

– Remove the exhaust system bracket from the subframe -arrows-. Refer to ⇒ Rep. Gr. 26 .

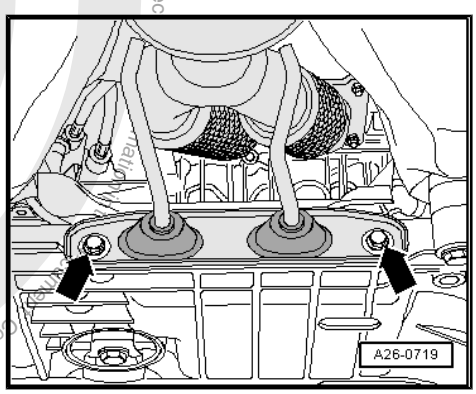

– Disconnect the exhaust system at the double clamp -arrows-.

– Tie up the front exhaust pipe or lay it on the tunnel brace.

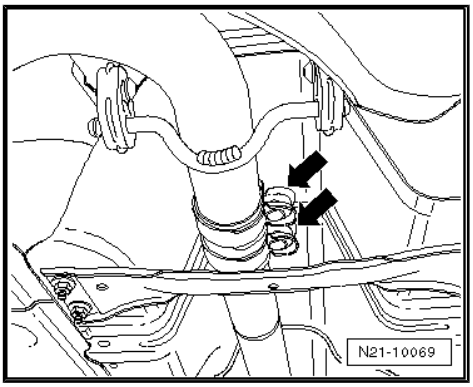

– Remove the pendulum support.

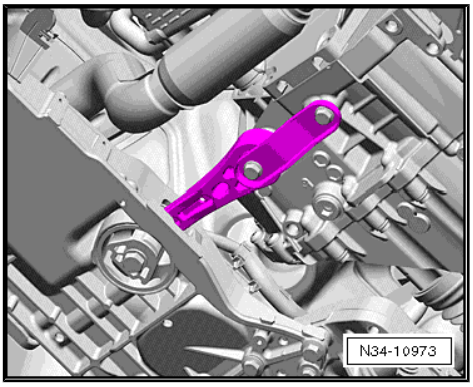

Protected by copyright. Copying for private or commercial purposes, in part or in whole, is not permitted unless authorised by Volkswagen AG. Volkswagen AG does not guarantee or accept any liability with the correctness of the information.
Copyright by Volkswagen AG.

– Disconnect the connector -1- from the Oil Level Thermal Sensor - G266- .

– Remove the coupling rod from the stabilizer bar and move it to the side. Refer to ⇒ Suspension, Wheels, Steering; Rep. Gr. 40 ; Front Suspension and Control Arm .

– Remove the left drive axle. Refer to ⇒ Suspension, Wheels, Steering; Rep. Gr. 40 ; Drive Axles, Removing and Installing .

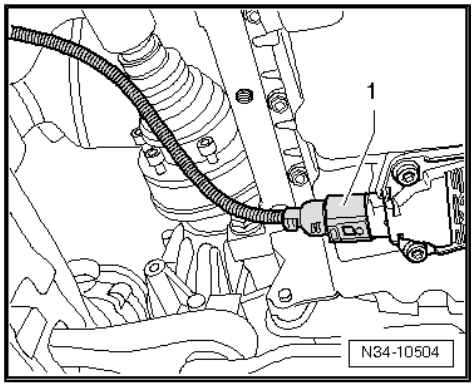

– If equipped remove the drive axle heat shield -arrows-. Refer to ⇒ Suspension, Wheels, Steering; Rep. Gr. 40 ; Drive Axles, Overview and Servicing; Drive Axle Heat Shield .

– Remove the right drive axle from the transmission and tie it up. Refer to ⇒ Suspension, Wheels, Steering; Rep. Gr. 40 ; Drive Axles, Removing and Installing .

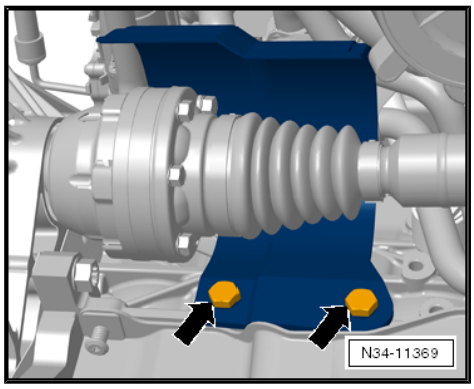

– Remove the hex collar bolts -arrows- on the left subframe mount -2- from the left bracket -1-.

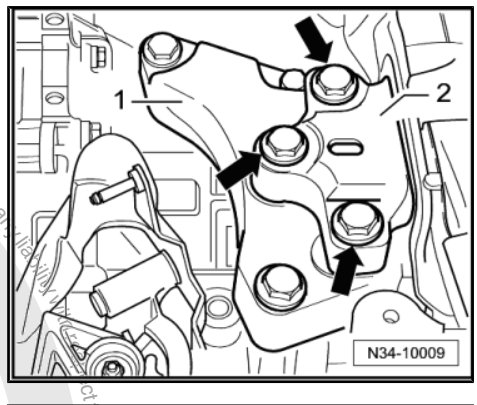

– Lower the transmission by adjusting the spindles, which are attached to the engine, to dimension -a- approximately 40 mm.

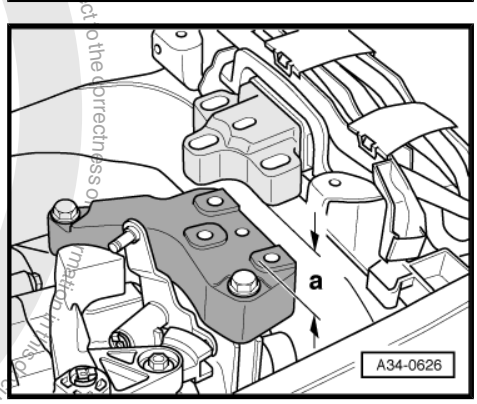

Note

When moving the engine/transmission assembly, pay attention to the connection lines, hoses and radiator.

Protected by copyright. Copying for private or commercial purposes, in part or in whole, is not permitted unless authorised by Volkswagen AG. Volkswagen AG does not guarantee or accept any liability with respect to the correctness of information in this document. Copyright by Volkswagen AG.

– Remove the bracket -1- from the transmission -arrows-.

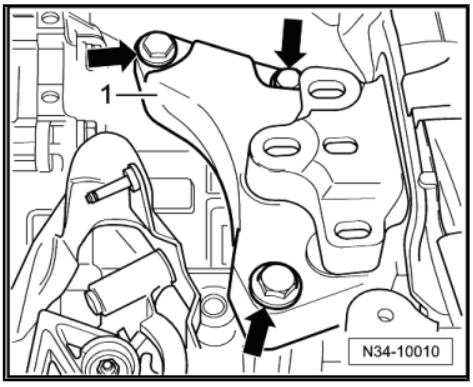

Metal Relay Lever

– Remove the lock washer -arrow- from the relay lever -1- and then remove the relay lever.

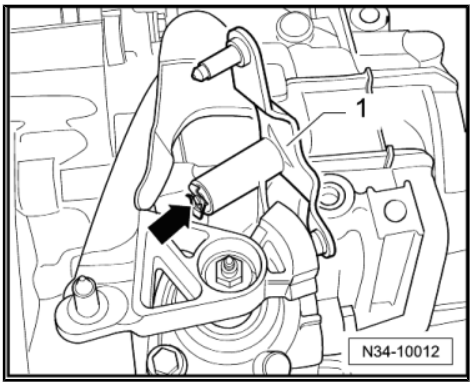

Plastic Relay Lever

– Remove the relay lever with the cable retainer. Refer to ⇒ “1.8 Plastic Relay Lever”, page 89 .

Continuation for All

– Remove the gearshift lever from the gearshift shaft.

– Remove the small flywheel cover plate -A- -arrows-, if equipped.

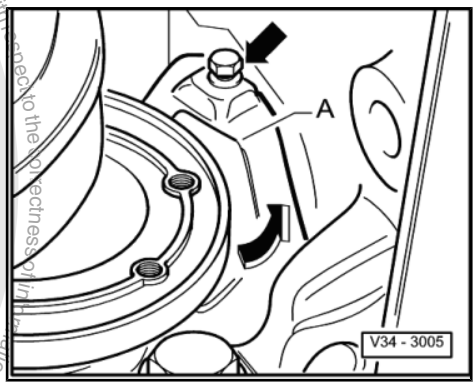

– Remove the lower engine/transmission connecting bolt -1-.

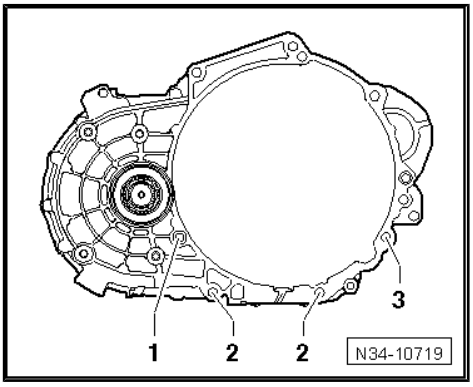

Note

Loosen the engine/transmission connecting bolt -3- and leave it in so that it is hand-tight.

Protected by copyright. Copying for private or commercial purposes, in part or in whole, is not permitted unless authorised by Volkswagen AG. Volkswagen AG does not guarantee or accept any liability with respect to the correctness of information in this document. Copyright by Volkswagen AG.

Protected by copyright. Copying for private or commercial purposes, in part or in whole, is not permitted unless authorised by Volkswagen AG. Volkswagen AG does not guarantee or accept any liability with respect to the correctness and completeness of this documentation.

– Tighten the Engine Support Bridge - Gearbox Bracket - T10346- with the bolt -1- in the left threaded hole in the subframe.

-1- = M6 x 20 collar bolt

– Secure the Engine Support Device - 3300A- on the Engine Support Bridge - Gearbox Bracket - T10346- .

– Place a cloth between Engine Support Device - 3300A- and oil pan.

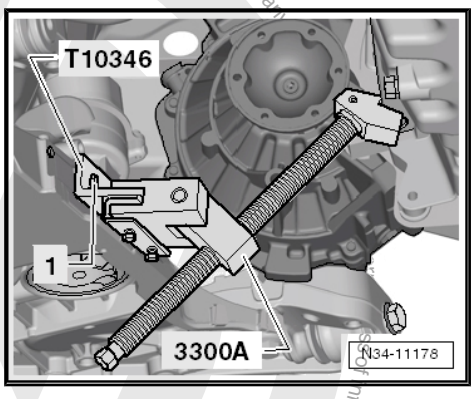

– Push the engine forward using the spindle on the Engine Support Device - 3300A- . Note the following when doing this:

• The A/C compressor -2- must not touch the refrigerant line -1- -arrow-.

• The generator must not touch the refrigerant line.

• The pressure pipe must not touch the radiator.

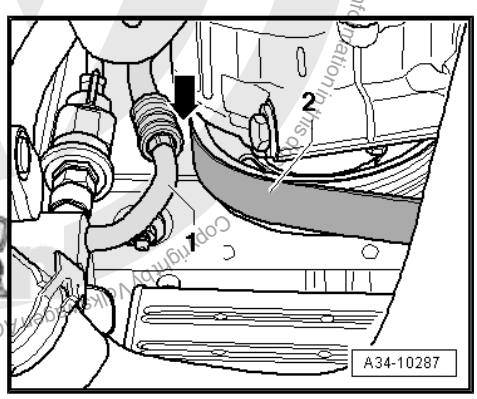

Align the Transmission Support - 3282- with the Transmission Support - Mounting Plate 33 - 3282/33- in order to remove the “02Q” transmission.

– Insert the Transmission Support - 3282- into the Engine and Gearbox Jack - VAS6931- .

– Align the arms of the Transmission Support - 3282- so that they match up with the holes in the Adjustment Plate .

– Install the Support Elements -A- as illustrated on the Adjustment Plate .

– Install the Transmission Support - Pins 29 - 3282/29- in place of the Mounting Element -C-.

– Position the Engine-Gearbox Jack - VAG1383A- under the vehicle. The arrow symbol -B- on the Adjusting Plate points in direction of travel.

– Align the Adjustment Plate so that it is parallel to the transmission.

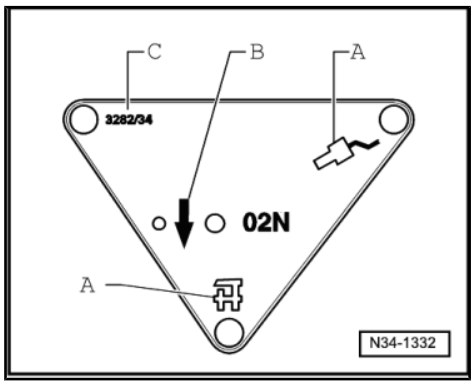

– Secure the Slide Hammer Set - Adapter 40 - VW771/40- inside the threaded hole in the transmission housing as shown.

– Install the Transmission Support - Pins 29 - 3282/29- into the hole on the transmission for the pendulum support bolt.

– Secure the transmission on the Transmission Support - 3282- with an M10 x 20 bolt -A-.

The drift -B- must be flush at the bottom with the guide on the Transmission Support - 3282- -arrow-.

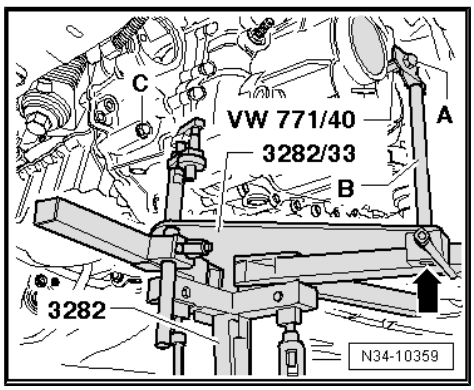

Protected by copyright. Copyright of this document is in the property of Volkswagen AG. Volkswagen AG does not guarantee or accept any liability with respect to the ... information in this document. Copyright by Volkswagen AG.

The engine/transmission connecting bolt -arrow- is removed.

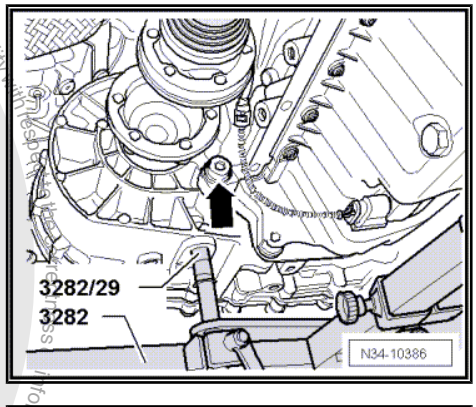

– Remove the engine/transmission connecting bolt -C- and the lower engine/transmission connecting bolts.
– Separate the transmission from the engine (alignment sleeves).
– Move the transmission in the area of the differential with the spindles of the Transmission Support - 3282- into an angled position.
• The differential, near the transmission, must face upward.

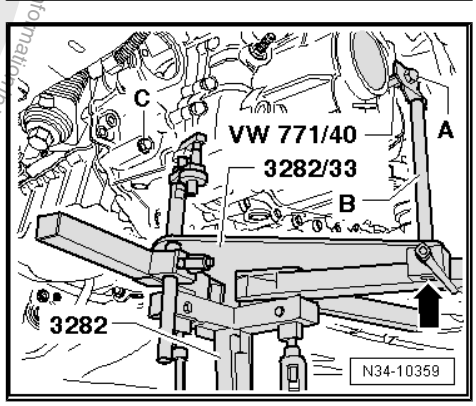

The right flange shaft -1- must be guided over the bolting eyelet of the engine -2-.

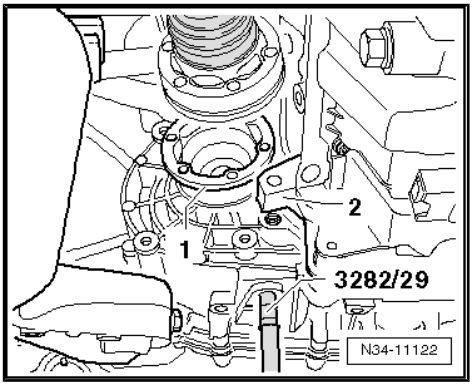

– Guide the transmission and the differential over the subframe -A- and swing it out.

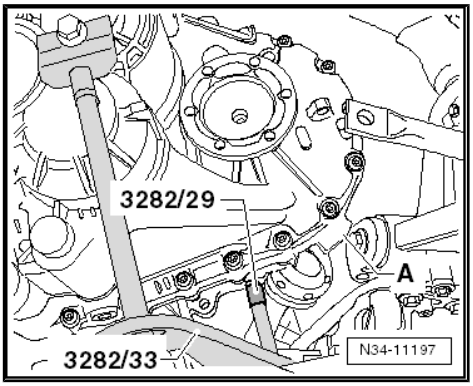

– Pay attention to the longitudinal member -arrows-. Then carefully lower the transmission.

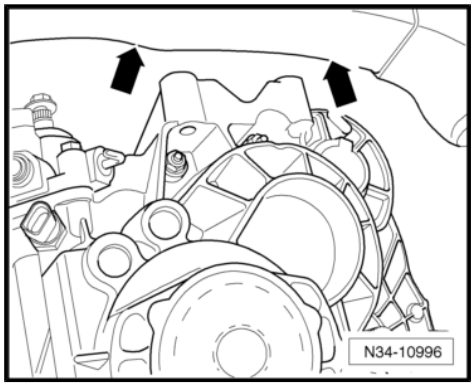

Note

Pay attention to all of the lines when lowering the transmission.

Installing

Note

- *Refer to "Transmission, Removing" to get a list of the special tools needed. Refer to* ⇒ *"2.1 Transmission, Removing and Installing", page 106* .
- *Replace the self-locking nuts and bolts.*
- *Replace bolts that were tightened with an additional turn.*
- *Install any cable ties that were loosened or cut off during removal at their same location.*
- *Clean the input shaft splines and (on used clutch plates) the hub splines. Remove any corrosion and then apply a very thin coat of Grease for Clutch Disc Shaft Splines - G 000 100- on the splines. Then move the clutch plate back and forth on the input shaft until the hub moves freely on the shaft. Excess grease must be removed.*

– If the transmission is replaced, transfer the transmission shift lever and the relay lever.

– Clean any locking compound residue from all threaded holes using a tap.

– Check whether there are centering sleeves for the engine/transmission in the cylinder block; install if necessary.

If the alignment sleeves are missing, it will be difficult to shift, there will be clutch problems and the transmission may make noises (loose rattling).

– Make sure the intermediate plate is engaged on the sealing flange and pushed onto the alignment sleeves -arrows-.

– Check the release bearing for wear. Replace the clutch slave cylinder with release bearing if necessary. Refer to ⇒ "2.2 Clutch Slave Cylinder with Release Bearing, Removing and Installing", page 52 .

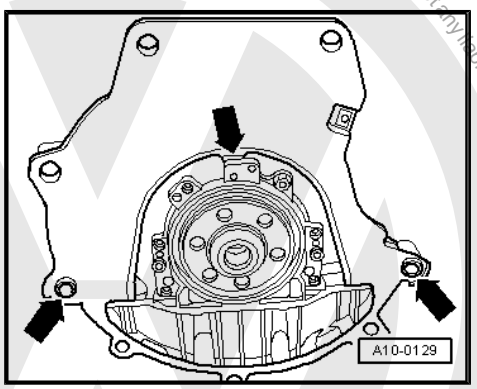

Protected by copyright. Copyright for private or commercial purposes, in part or in whole, is not permitted unless authorised by Volkswagen AG. Volkswagen AG does not guarantee or accept any liability with respect to the correctness of information in this document. Copyright by Volkswagen AG.

– Tighten the Engine Support Bridge - Gearbox Bracket - T10346- with the bolt -1- in the left threaded hole in the subframe.

-1- = M6 x 20 collar bolt

– Secure the Engine Support Device - 3300A- on the Engine Support Bridge - Gearbox Bracket - T10346- .

– Place a cloth between Engine Support Device - 3300A- and oil pan.

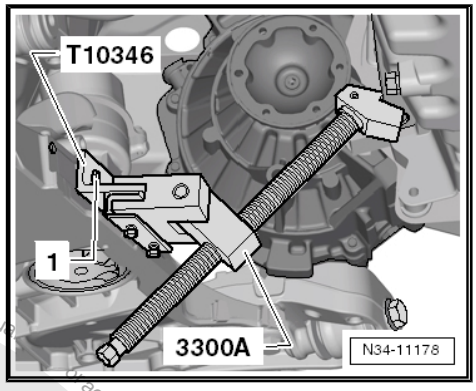

– Push the engine forward using the spindle on the Engine Support Device - 3300A- . Note the following when doing this:

- The A/C compressor -2- must not touch the refrigerant line -1- -arrow-.
- The generator must not touch the refrigerant line.
- The pressure pipe must not touch the radiator.

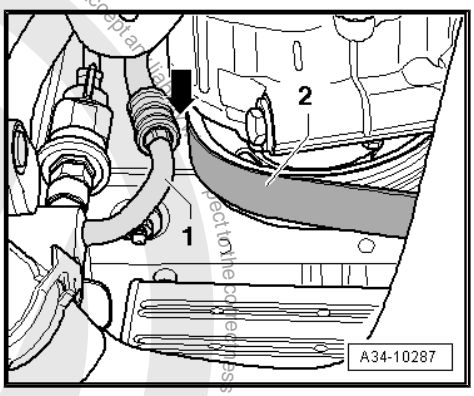

Align the Transmission Support - 3282- with the Transmission Support - Mounting Plate 33 - 3282/33- in order to install the “02Q” transmission.

– Align the arms of the Transmission Support - 3282- so that they match up with the holes in the Adjustment Plate .

– Install the Support Elements -A- as illustrated on the Adjustment Plate .

– Install the Transmission Support - Pins 29 - 3282/29- in place of the Mounting Element -C-.

– Place the transmission on the Engine and Gearbox Jack - VAS6931- .

– Align the Adjustment Plate so that it is parallel to the transmission.

– Install the Transmission Support - Pins 29 - 3282/29- into the hole on the transmission for the pendulum support bolt.

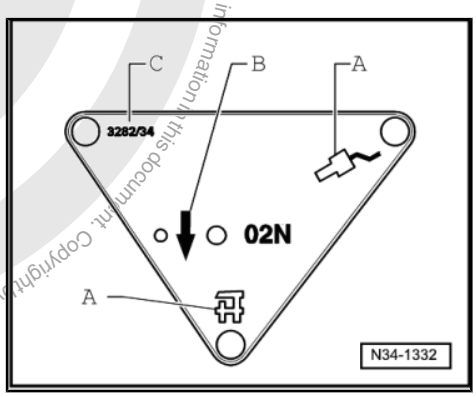

– Secure the Slide Hammer Set - Adapter 40 - VW771/40- inside the threaded hole in the transmission housing as shown.

– Secure the transmission on the Transmission Support - 3282- with an M10 x 20 bolt -A-.

The drift -B- must be flush at the bottom with the guide on the Transmission Support - 3282- -arrow-.

– Position the Engine and Gearbox Jack - VAS6931- under the vehicle. The arrow on the adjusting plate points in direction of travel.

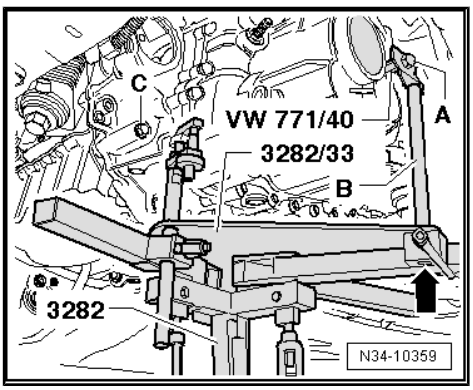

Note

Pay attention to all of the lines when installing the transmission.

– Lift the transmission carefully.

– Now turn the transmission upward in the area of the differential and downward in the area of the 6th gear via the spindles of the Transmission Support - 3282- .

– Guide the transmission and differential -A- over the subframe.

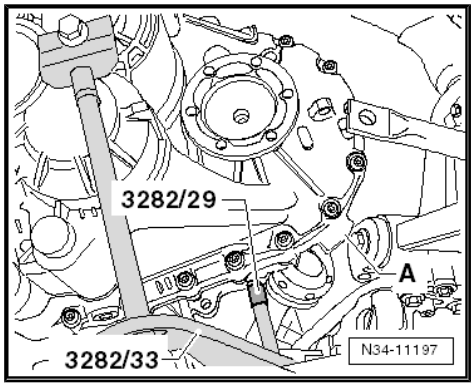

• The right flange shaft must be guided past the flywheel -arrow 2-; pay attention to the intermediate plate -arrow 1-.

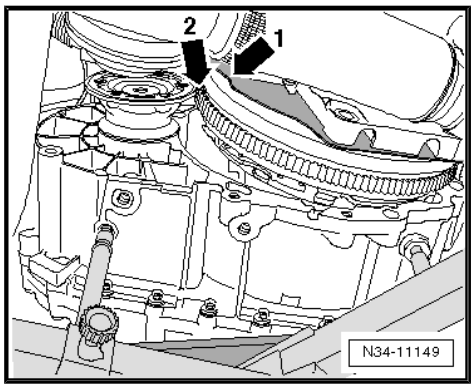

– The right flange shaft -1- must be guided over the bolting eyelet of the engine -2-.

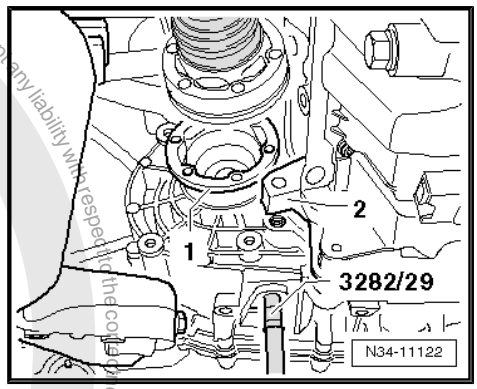

– At the same time, change the position of the transmission using the spindles of the Transmission Support - 3282- so that it does not come into contact with the longitudinal member -arrows-.

– Turn the transmission to its installed position using the spindles of the Transmission Support - 3282- .

– Align the transmission to the engine (alignment sleeves) and insert it.

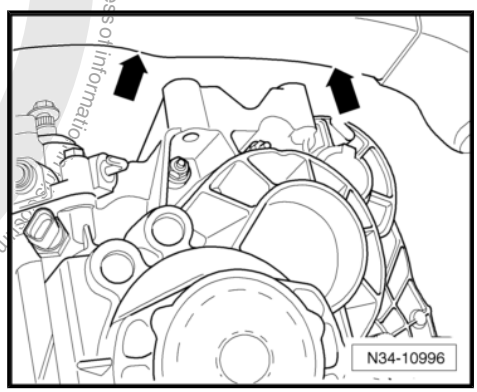

Protected by copyright. Copying for private or commercial purposes, in part or in whole, is not permitted unless authorised by Volkswagen AG. Volkswagen AG does not guarantee or accept any liability with respect to the correctness of information. Copyright by Volkswagen AG.

– Insert engine/transmission bolt -C- and tighten to tightening specification. Refer to
⇒ “2.2 Tightening Specifications”, page 124 .

– Install lower engine/transmission connecting bolts and tighten to tightening specification. Refer to
⇒ “2.2 Tightening Specifications”, page 124 .

– Remove the Engine Support Device - 3300A- and Engine Support Bridge - Gearbox Bracket - T10346- .

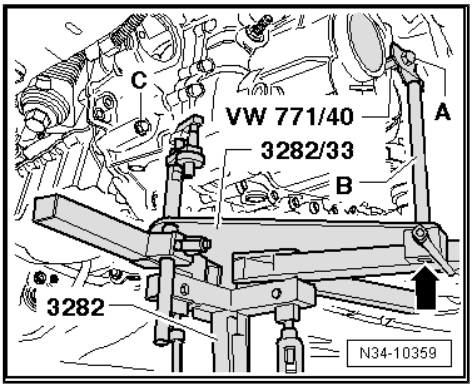

– Install the engine/transmission connecting bolt -arrow- and tighten it to the tightening specification. Refer to
⇒ “2.2 Tightening Specifications”, page 124 .

– After transmission is bolted to engine at bottom, remove the Transmission Support - 3282- from transmission.

– Install the upper engine/transmission connecting bolts and tighten them to the tightening specification. Refer to
⇒ “2.2 Tightening Specifications”, page 124 .

– Attach the transmission gearshift lever to the gearshift shaft. Refer to
⇒ Fig. ““Installing the Transmission Shift Lever”“ , page 88 and tighten the nut to tightening specification -item 17-
⇒ Item 17 (page 87) .

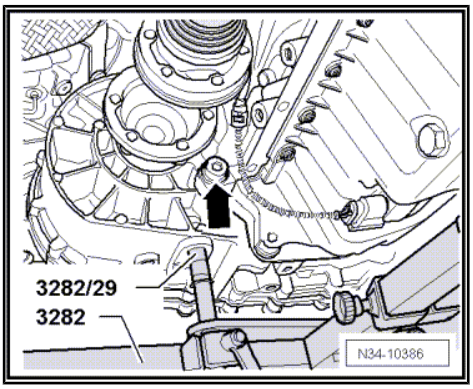

Metal Relay Lever

– Install the relay lever -1- and the lock washer -arrow-.

Plastic Relay Lever

– Install the relay lever with the cable retainer. Refer to
⇒ “1.8 Plastic Relay Lever”, page 89 .

Continuation for All

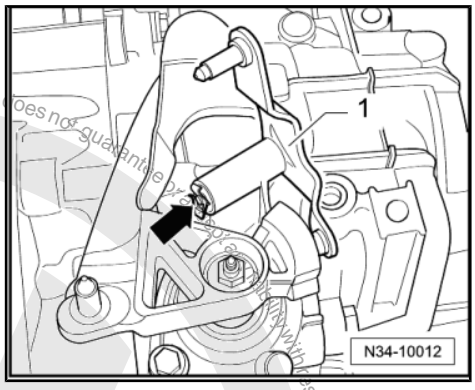

– Attach the bracket -1- with the new hex bolts to the transmission -arrows- and tighten them to the tightening specification. Refer to ⇒ “2.2 Tightening Specifications”, page 124 .

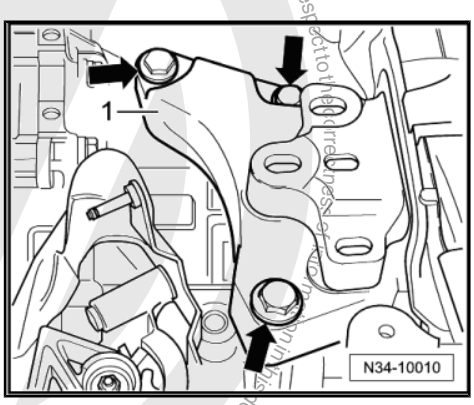

Protected by copyright. Copying for private or commercial purposes, in part or whole, is not permitted unless authorized by Volkswagen AG. Volkswagen AG does not guarantee or accept any liability with respect to the correctness of information in this document. Copyright by Volkswagen AG.

– Align the engine/transmission in its installed position. Lift it until the bracket -1- is in complete contact with the left subframe mount -2-.

– Install the new hex bolts -arrows- of the left subframe mount -2- in the bracket -1- and tighten to the tightening position. Refer to ⇒ “2.2 Tightening Specifications”, page 124 .

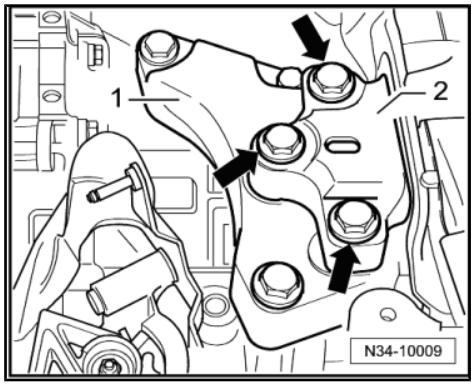

Note

Install the engine/transmission mount free of tension. Refer to ⇒ Rep. Gr. 10 ; Engine, Removing and Installing .

WARNING

Only remove the Engine Support Bridge - 10-222A- when all subframe mount bolts are tightened to the tightening specification.

– Install the flywheel cover plate -A- (if equipped) -arrows-. Refer to ⇒ “2.2 Tightening Specifications”, page 124 .

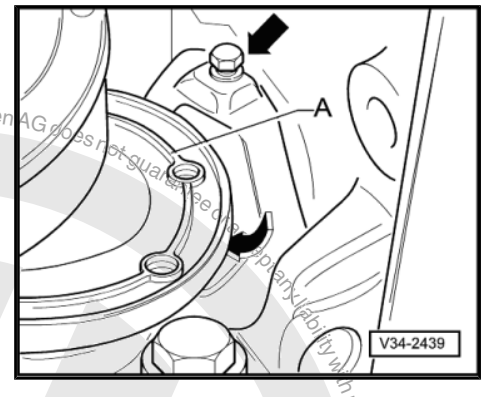

Note

- *There are threaded inserts (for example “Heli Coil”) in the pendulum support fastening holes.*
- *Characteristic: there is a collar on the first thread -arrow-.*
- *Observe the correct bolts and tightening specifications. Refer to ⇒ Suspension, Wheels, Steering; Rep. Gr. 40 ; Subframe; Overview - Subframe .*

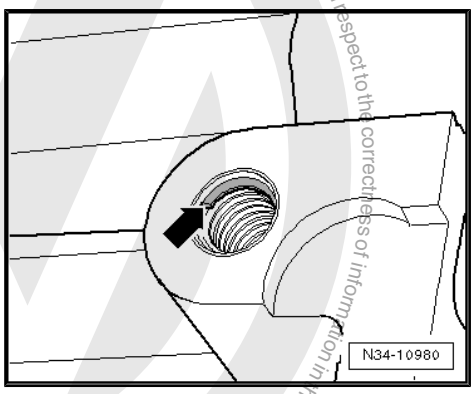

– Install the pendulum support. Refer to ⇒ Suspension, Wheels, Steering; Rep. Gr. 40 ; Subframe; Overview - Subframe .

– Install the drive axles. Refer to ⇒ Suspension, Wheels, Steering; Rep. Gr. 40 ; Drive Axles, Removing and Installing .

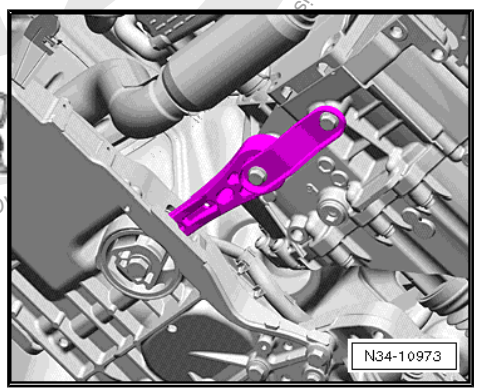

Protected by copyright. Copying for private or commercial purposes, in part or in whole, is not permitted unless authorised by Volkswagen AG. Volkswagen AG does not guarantee or assume any liability with respect to the correctness of information in this document.

– If equipped install the drive axle heat shield -arrows-. Refer to ⇒ Suspension, Wheels, Steering; Rep. Gr. 40 ; Drive Axles, Overview and Servicing; Drive Axle Heat Shield .

– Install the left coupling rod. Refer to ⇒ Suspension, Wheels, Steering; Rep. Gr. 40 .

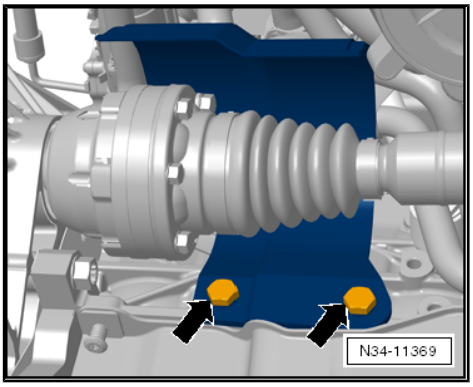

– Install the Left Front Level Control System Sensor - G78- in the control arm, if equipped. Refer to ⇒ Rep. Gr. 40 .

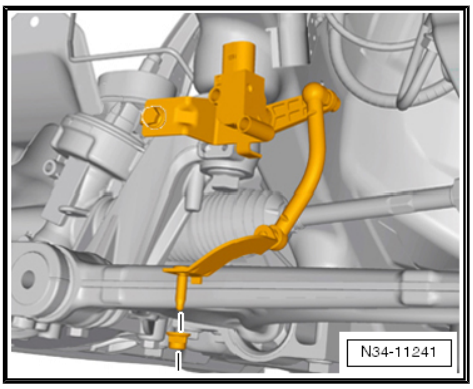

– Connect the connector -1- to the Oil Level Thermal Sensor - G266- .

– Assemble the exhaust system and install the exhaust system bracket to the subframe. Refer to ⇒ Rep. Gr. 26 .

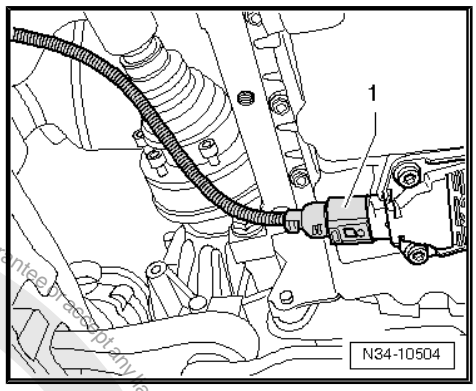

– Install the air shroud -arrow- and the radiator fans. Refer to ⇒ Rep. Gr. 19 .

– Attach the charge air pipe to the engine. Refer to ⇒ Rep. Gr. 21 .

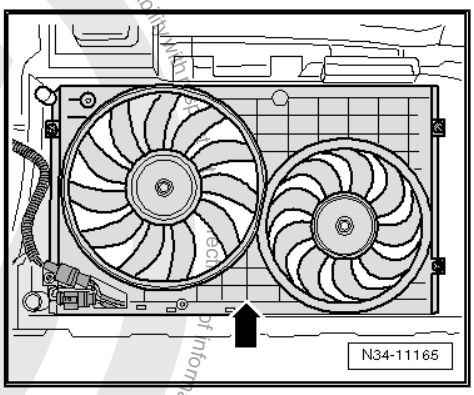

Protected by copyright. Copying for private or commercial purposes, in part or in whole, is not permitted unless authorised by Volkswagen AG. Volkswagen AG does not guarantee or accept any liability with respect to the correctness of information in this document. Copyright by Volkswagen AG.

– Install the left charge air hose -arrow 1- and -arrow 2- ⇒ Rep. Gr. 21 .

– Attach the right charge air hose to the charge air cooler. Refer to ⇒ Rep. Gr. 21 .

– Position the starter and install the lower bolt. Refer to ⇒ Electrical Equipment; Rep. Gr. 27 ; Starter; Starter, Removing and Installing .

– Attach the bracket for the lines to the lower starter bolt.

– Install the starter bolt and then connect the connector and wires to the starter. Refer to ⇒ Electrical Equipment; Rep. Gr. 27 ; Starter; Starter, Removing and Installing .

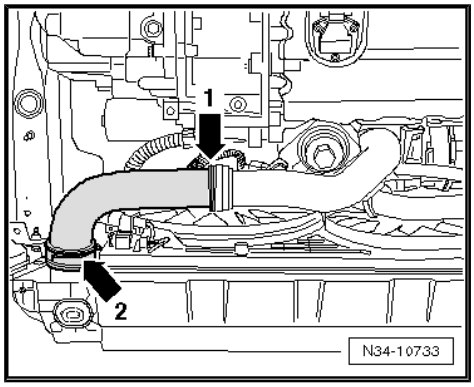

– Attach the ground cable -1- to the top starter bolt.

– Connect the connector -2- to the Back-Up Lamp Switch - F4- .

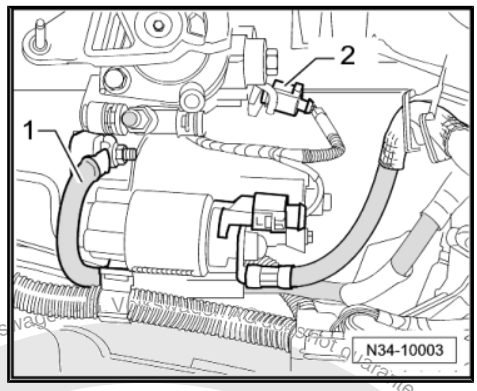

– Transmission on vehicles with Start/Stop System: connect the connector -arrow- to the Transmission Neutral Position Sensor - G701- .

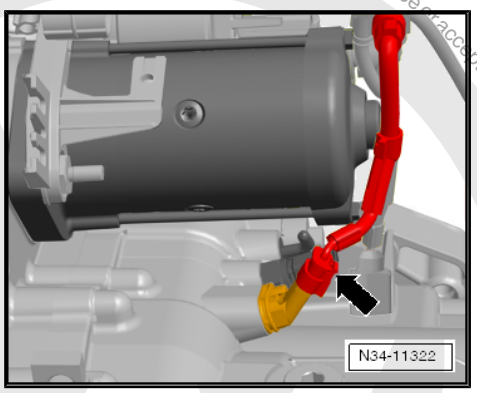

– Push the hose/line assembly or pipe -A- into the bleeder/clutch slave cylinder to the stop and push the clamp -arrow- downward.

– Pull on the line to make sure it is secure.

– Remove the Hose Clamps - Up To 25mm - 3094- from the supply hose.

– After removing the Hose Clamps - Up To 25mm - 3094- , bring the return hose back to its original shape.

– Bleed the clutch mechanism. Refer to
⇒ “1.10 Clutch Mechanism, Bleeding”, page 48 .

– Make sure the vacuum hose for the brake system is installed correctly. Refer to ⇒ Brake System; Rep. Gr. 47 ; Hydraulic System .

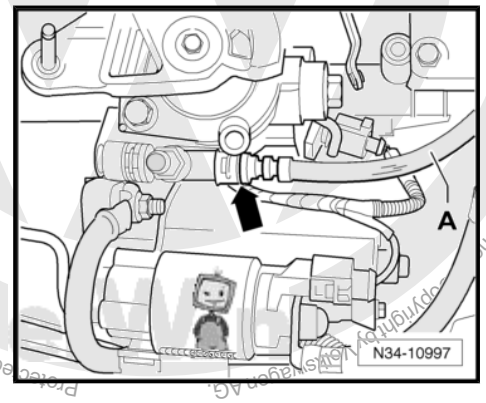

Protected by copyright. Copying for private or commercial purposes, in part or in whole, is not permitted unless authorised by Volkswagen AG. Volkswagen AG does not guarantee or accept any liability with respect to the correctness of information in this document. Copyright by Volkswagen AG.

– Attach the cable mounting bracket to the transmission and tighten the bolts and nuts -arrows- to the tightening specification -item 6- ⇒ Item 6 (page 86) and -item 10- ⇒ Item 10 (page 86) .

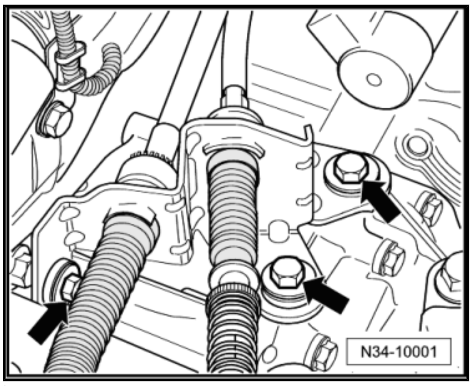

– Apply a small amount of grease to the pin -arrow- on the gearshift lever -1-.

Refer to the Parts Catalog for the grease allocation.

– Slide the shift cable onto the respective pins -arrow- and secure it with a new lock washer -3-.

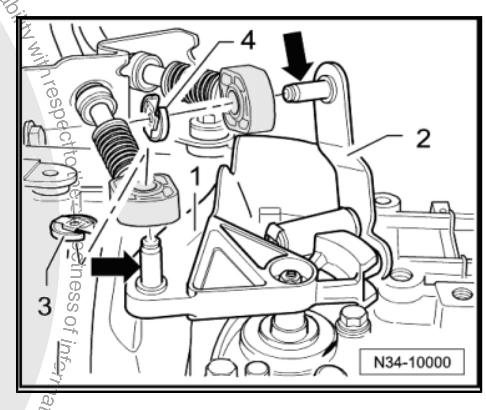

Metal Relay Lever

– Apply a small amount of grease to the pin -arrow- of the relay lever -2-.

Refer to the Parts Catalog for the grease allocation.

– Slide the selector cable onto the respective pins -arrow- and secure it with a new lock washer -4-.

Plastic Relay Lever

– Insert the selector cable into the cable retainer.

Continuation for All

– Adjust the gearshift mechanism. Refer to ⇒ “1.11 Selector Mechanism, Adjusting”, page 97 .

– Install the battery tray, battery cover and the battery. Refer to ⇒ Electrical Equipment; Rep. Gr. 27 ; Battery; Battery, Removing and Installing .

– If removed, install complete air filter housing. Refer to ⇒ Rep. Gr. 23 ; Diesel Direct Injection System; Air Filter Housing, Removing and Installing .

– Install the engine cover if necessary.

– Connect the battery and observe procedure after connecting battery. Refer to ⇒ Electrical Equipment; Rep. Gr. 27 ; Battery; Battery, Disconnecting and Connecting .

– Check the transmission fluid level. Refer to ⇒ “8 Transmission Fluid, Checking”, page 192 .

– Install the lower part of the left front wheel housing liner. Refer to ⇒ Body Exterior; Rep. Gr. 66 ; Wheel Housing Liner .

– Install the noise insulation. Refer to ⇒ Body Exterior; Rep. Gr. 50 ; Noise Insulation .

– Check the headlamp adjustment if the vehicle has a Left Front Level Control System Sensor - G78- . Refer to ⇒ Electrical Equipment; Rep. Gr. 94 ; Headlamps; Headlamp, Adjusting .

Protected by copyright. Copying for private or commercial purposes, in part or in whole, is not permitted unless authorised by Volkswagen AG. Volkswagen AG does not guarantee or accept any liability with respect to the correctness of information in this document. Copyright by Volkswagen AG.

2.2 Tightening Specifications

Transmission to Engine (Engine Flange Face)

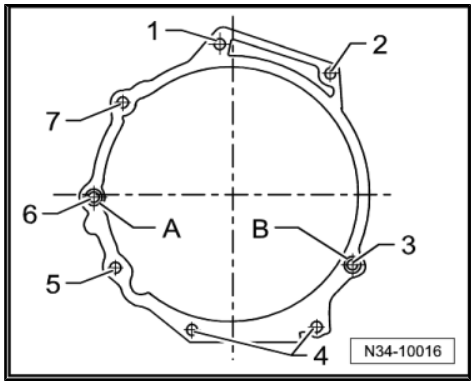

Item	Bolt	Quantity	Nm
1	M12 x 55 ♦ With a short M8 threaded pin	1	80
2	M12 x 55 ♦ With a long threaded pin M8	1	80
3	M12 x 65	1	80
4	M10 x 50	2	40
5	M10 x 105	1	40
6	M12 x 165 ♦ With a short M8 threaded pin ♦ Also starter to transmission	1	80
7	M12 x 165 ♦ With a short M8 threaded pin ♦ Also starter to transmission	1	80
-	M6 x 8 ♦ Small flywheel cover plate (not present on all engines)	1	10

-A- and -B-: alignment bushings

Transmission Bracket -1- to Transmission.

– Replace the bolts.

Tighten the bolts -arrows-: 60 Nm + 90°.

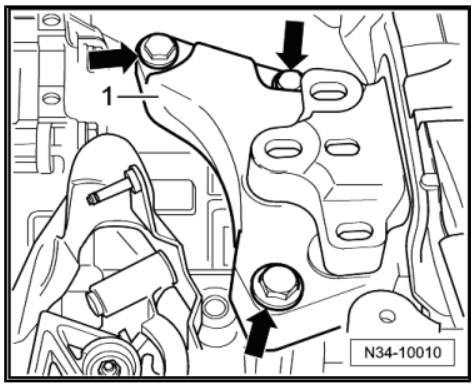

Protected by copyright. Copying for private or commercial purposes, in part or in whole, is not permitted unless authorised by Volkswagen AG. Volkswagen AG does not guarantee or accept any liability with respect to the correctness of information in this document. Copyright by Volkswagen AG.

Transmission to Body

– Replace the bolts.

Tighten the bolts -arrows-: 60 Nm + 90°.

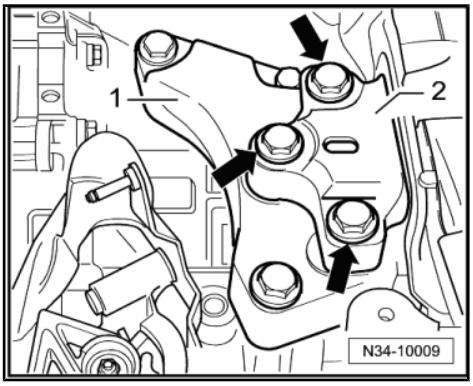

Note

Install the engine/transmission mount free of tension. Refer to ⇒ Rep. Gr. 10 ; Engine, Removing and Installing .

Protected by copyright. Copyright by Volkswagen AG. Volkswagen AG does not guarantee or accept any liability with respect to the correctness of information in this document. Copyright by Volkswagen AG. This document, in part or in whole, is not permitted unless authorised by Volkswagen AG. Copying for private or commercial purposes, in part or in whole, is not permitted unless authorised by Volkswagen AG.

3 Transmission, Removing and Installing, Jetta from MY 2005 , Golf Wagon from MY 2007 and Golf Wagon from MY 2010, Vehicles with Gasoline Engine and FWD

⇒ “3.1 Transmission, Removing and Installing”, page 126 .

⇒ “6 Transmission, Transporting”, page 189 .

⇒ “3.2 Tightening Specifications”, page 143 .

3.1 Transmission, Removing and Installing

Special tools and workshop equipment required

- Engine Support Bridge - 10-222A-
- Engine Support Bridge - Engine Support Feet - 10-222A/8-
- Engine Support Bridge - Engine Support 3 - 10-222A /3-
- Engine Support Bridge - Engine Support 18 - 10-222A /18-
- Transmission Support - 3282-
- Support Elements for transmission (determine when mounting the Mounting Plate on the Transmission Support)
- Transmission Support - Mounting Plate 33 - 3282/33-
- Transmission Support Jig - 3336- to transport the transmission.
- Torque Wrench 1331 5-50Nm - VAG1331-
- Torque Wrench 1332 40-200Nm - VAG1332-
- Engine and Gearbox Jack - VAS6931-
- Engine Support Bridge - Gearbox Bracket - T10346- quantity: 2
- Engine Support Device - 3300A-
- Slide Hammer Set - Adapter 40 - VW771/40-
- Hose Clamps - Up To 25mm - 3094-
- Grease for Clutch Disc Shaft Splines - G 000 100-
- Allocate the grease for gearshift mechanism. Refer to the Parts Catalog.
- M6 x 20 collar bolt
- M6 x 80 collar bolt
- M10 x 20 hex bolt

Removing

The Engine Support Bridge - 10-222A- and the Engine Support Bridge - Engine Support Feet - 10-222A/8- will be mounted on the longitudinal members later in the procedure.

Protected by copyright. Copying for private or commercial purposes, in part or on whole, is not permitted unless authorised by Volkswagen AG. Volkswagen AG does not guarantee or accept any liability with respect to the correctness of information in this document. Copyright by Volkswagen AG.

- To protect the edges of the fender, cover both Engine Support Bridge - Engine Support Feet - 10-222A/8- with cloth tape -arrow-. Refer to the Parts Catalog (Chemical Materials).

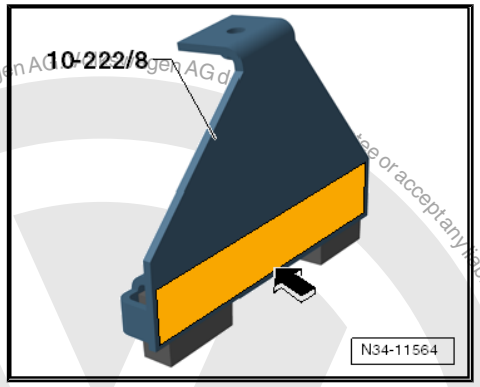

– First check whether a coded radio is installed. If so, obtain the anti-theft code.

– Disconnect the battery ground cable. Refer to ⇒ Electrical Equipment; Rep. Gr. 27 ; Battery; Battery, Disconnecting and Connecting .

Later in the procedure, the Engine Support Bridge - 10-222A- is connected to the engine lifting eyes.

– Remove the engine cover if it is blocking the lifting eyes.

– Remove the air filter housing if it is located near the battery. Refer to ⇒ Rep. Gr. 24 ; Air Filter; Air Filter Housing, Removing and Installing .

– Remove the battery, the battery cover and the battery tray. Refer to ⇒ Electrical Equipment; Rep. Gr. 27 ; Battery; Battery, Removing and Installing .

– Remove the shift cable lock washer -3- from the transmission shift lever -1- and remove the cable from the pin -arrow-.

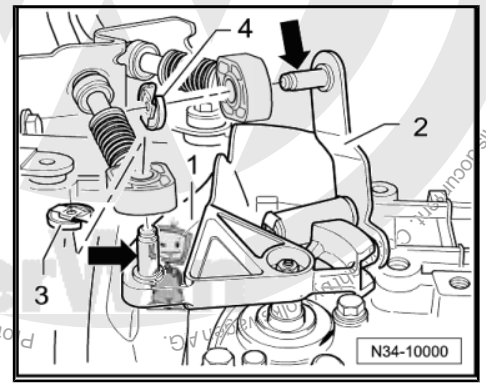

Metal Relay Lever

– Remove the selector cable lock washer -4- from the relay lever -2- and remove the cable from the pin -arrow-.

Plastic Relay Lever

– Remove the cable retainer from the selector cable.

- To avoid damage to the selector cable, the cable retainer must be disconnected from the selector lever before removal.

– Pull the securing mechanism all the way forward in direction of -arrow 1- and then unlock to the left in direction of -arrow 2-.

– Press the relay lever forward (in the direction of -arrow 3-).

– The relay lever is removed together with the cable retainer later in the procedure.

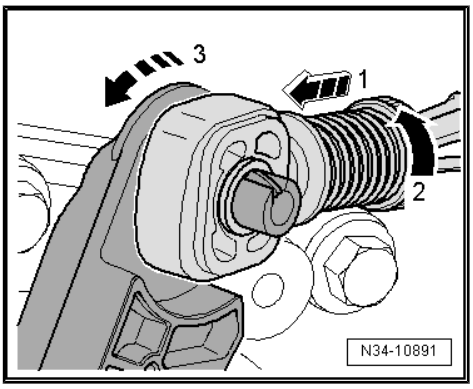

– Remove the cable bracket from the transmission -arrows-, move it to the side and tie it up.

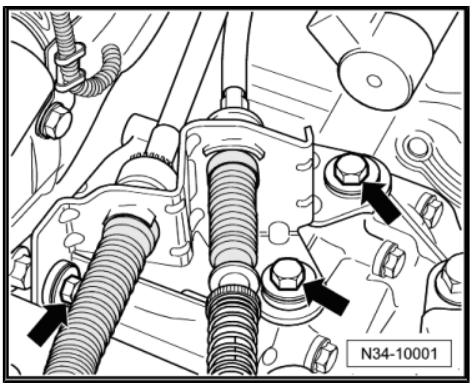

Protected by copyright. Copying for private or commercial purposes, in part or in whole, is not permitted unless authorised by Volkswagen AG. Volkswagen AG does not guarantee or accept any liability with respect to the correctness of information in this document.

Vehicles with A Pipe Between the Clutch Master and Slave Cylinders

– Clamp the clutch master cylinder hose using a Hose Clamps - Up To 25mm - 3094- .

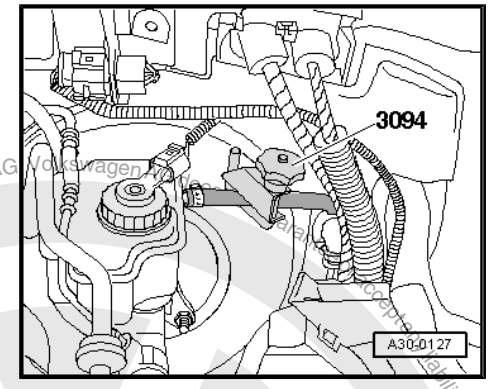

Vehicles with A Hose/Line Assembly between the Clutch Master and Slave Cylinders

– Clamp off the hose on the hose/line assembly -A- to the clutch slave cylinder using the Hose Clamps - Up To 25mm - 3094- .

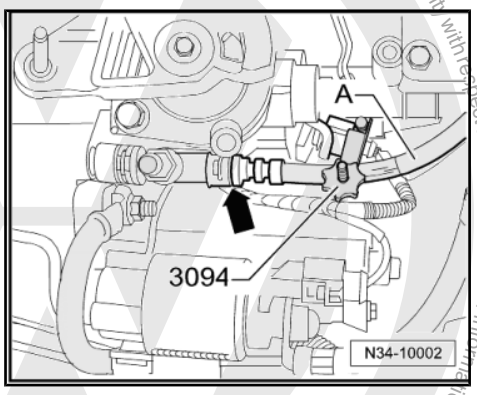

Continuation for All

– Pull the clamp -arrow- for the hose/line assembly or the pipe out all the way to the stop.

– Remove the hose/line assembly or pipe from the bleeder/ clutch slave cylinder and seal it off.

> ⚠ **Caution**
>
> *Do not press the clutch pedal anymore.*

– Remove the ground cable -1- from the top starter bolt.

– Disconnect the connector -2- from the Back-Up Lamp Switch - F4- .

– Disconnect the connector and the wire from the starter.

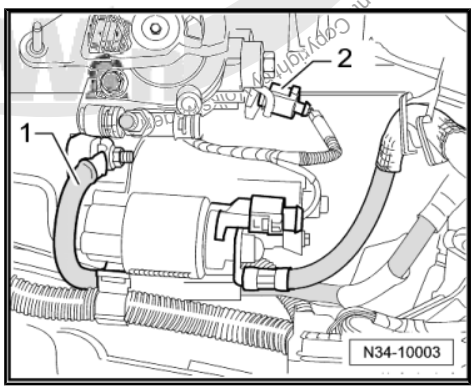

– Remove the upper engine/transmission connecting bolts -arrows-.

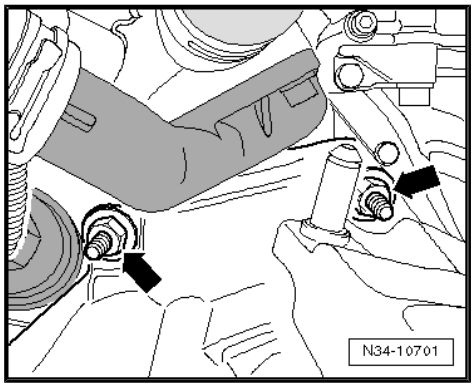

Protected by copyright. Copying for private or commercial purposes, in part or in whole, is not permitted unless authorised by Volkswagen AG. Volkswagen AG does not guarantee or accept any liability with respect to the correctness of information in this document.

– Remove the upper bolt from the starter.

– Install the Engine Support Bridge - Gearbox Bracket - T10346- in the most rear hole out of the three holes in the battery tray.

– Use a collar bolt M6 x 80 or one of the battery tray bolts for this.

– Remove the foam piece on the upper edge of the left and right fender. Refer to ⇒ Body Exterior; Rep. Gr. 50 ; Fender .

– If there are hose and cable connections located near the engine lifting eyes for the Engine Support Bridge - 10-222A- , these must now be removed.

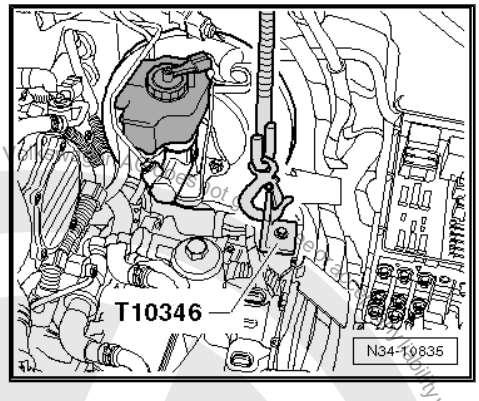

– Position the Engine Support Bridge - 10-222A- in front of the hood support.

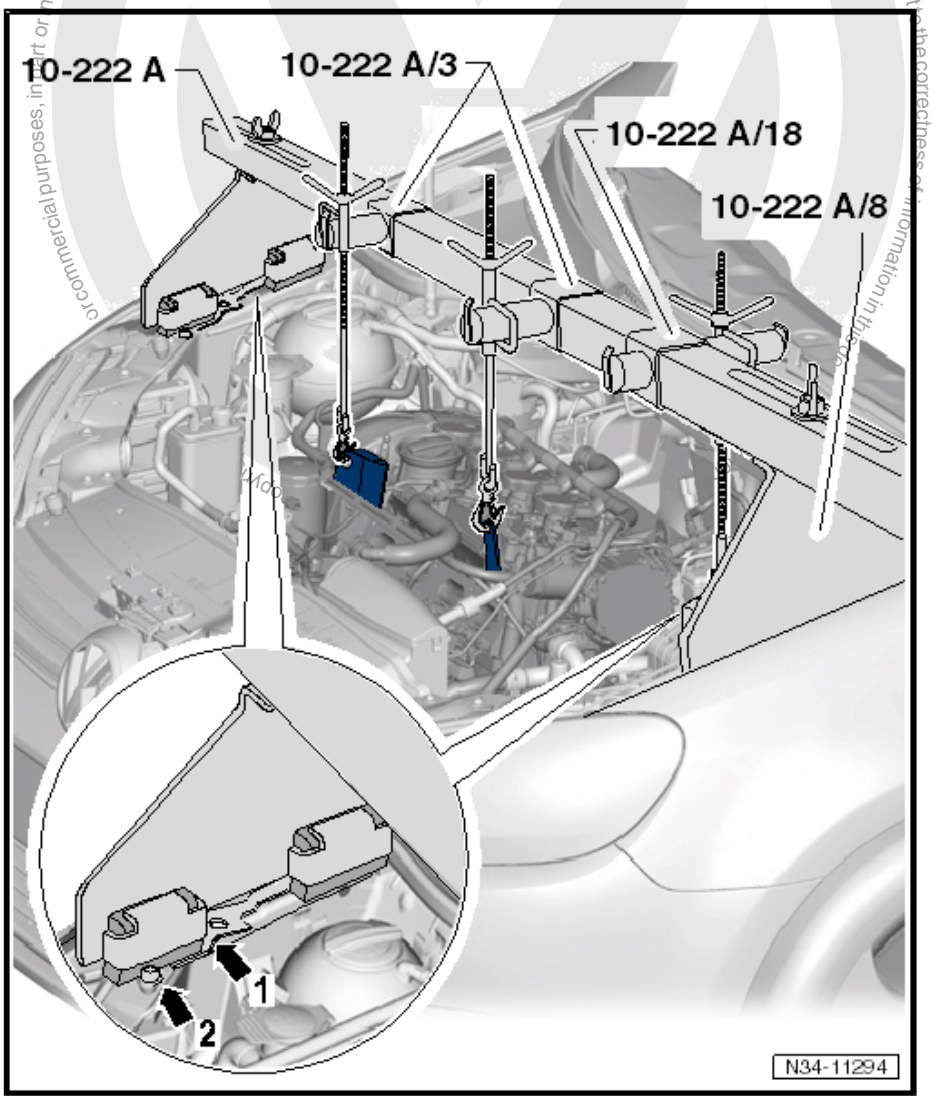

– Use:

– Position the Engine Support Bridge - Engine Support Feet - 10-222A/8- :

– Attach the engine and the Engine Support Bridge - Gearbox Bracket - T10346- to the Engine Support Bridge - 10-222A- .

– Pretension the engine/transmission assembly and Engine Support Bridge - 10-222A- via the spindles.

The left drive axle must be removed later in the procedure.

– With the vehicle still standing on its wheels, loosen the left front collar bolt -arrow- a maximum 90°, otherwise the wheel bearing will get damaged. Refer to ⇒ Suspension, Wheels, Steering; Rep. Gr. 40 ; Drive Axles, Removing and Installing .

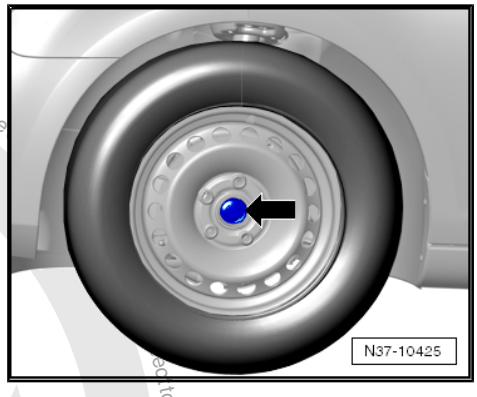

– Remove the noise insulation. Refer to ⇒ Body Exterior; Rep. Gr. 50 ; Noise Insulation .

– Remove the lower part of the left front wheel housing liner. Refer to ⇒ Body Exterior; Rep. Gr. 66 ; Wheel Housing Liner .

– Remove the Left Front Level Control System Sensor - G78- from the control arm, if equipped. Refer to ⇒ Rep. Gr. 40 .

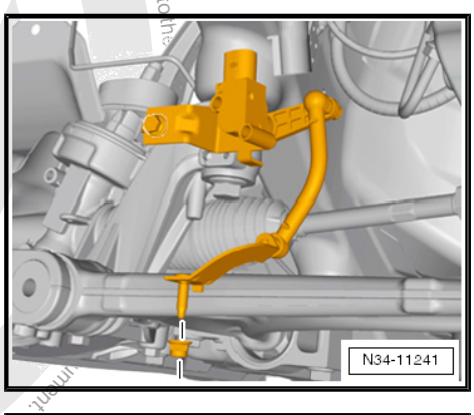

– Remove the bracket from the starter.

– Remove the starter. Refer to ⇒ Electrical Equipment; Rep. Gr. 27 ; Starter; Starter, Removing and Installing .

– Remove the left charge air hose -arrow 1- and -arrow 2- and remove the charge air pipe on the engine. Refer to ⇒ Rep. Gr. 21 .

– Remove the right charge air hose. Refer to ⇒ Rep. Gr. 21 .

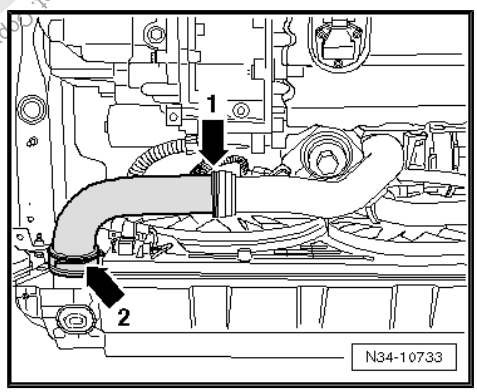

– Remove the air shroud -arrow- and the radiator fans. Refer to ⇒ Rep. Gr. 19

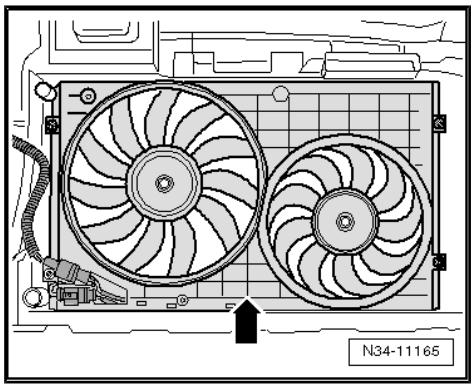

– Remove the front exhaust pipe from the turbocharger (-arrow-). Refer to ⇒ Rep. Gr. 26 And secure it.

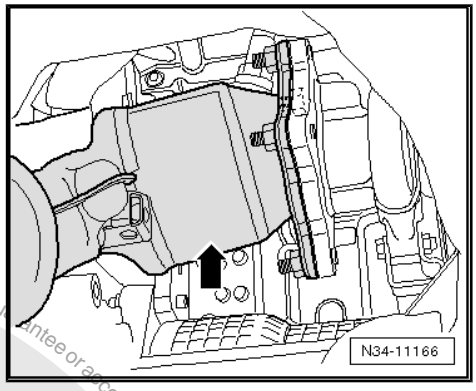

– Remove the pendulum support.

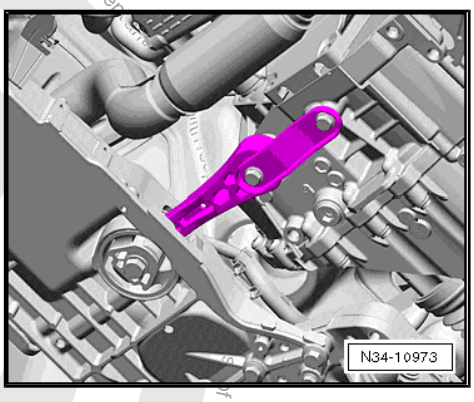

– Disconnect the connector -1- from the Oil Level Thermal Sensor - G266- .

– Remove the coupling rod from the stabilizer bar and move it to the side. Refer to⇒ Suspension, Wheels, Steering; Rep. Gr. 40 .

– Remove the left drive axle. Refer to ⇒ Suspension, Wheels, Steering; Rep. Gr. 40 ; Drive Axles, Removing and Installing .

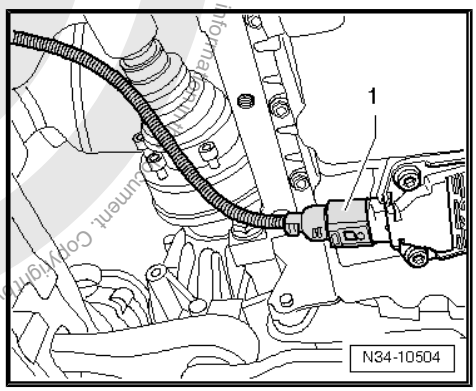

– If equipped remove the drive axle heat shield -arrows-. Refer to ⇒ Suspension, Wheels, Steering; Rep. Gr. 40 ; Drive Axles, Overview and Servicing; Drive Axle Heat Shield .

– Remove the right drive axle from the transmission and tie it up. Refer to ⇒ Suspension, Wheels, Steering; Rep. Gr. 40 ; Drive Axles, Removing and Installing .

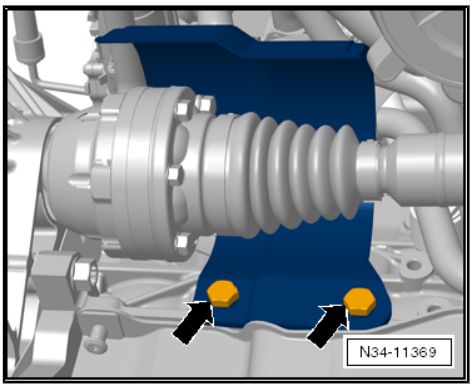

Protected by copyright. Copying for private or commercial purposes, in part or in whole, is not permitted unless authorised by Volkswagen AG. Volkswagen AG does not guarantee or accept any liability with respect to the correctness of information in this document. Copyright by Volkswagen AG.

– Remove the small flywheel cover plate -A- -arrows-, if equipped.

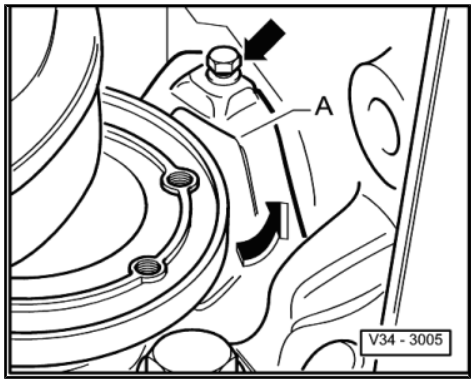

– Remove the hex collar bolts -arrows- on the left subframe mount -2- from the left bracket -1-.

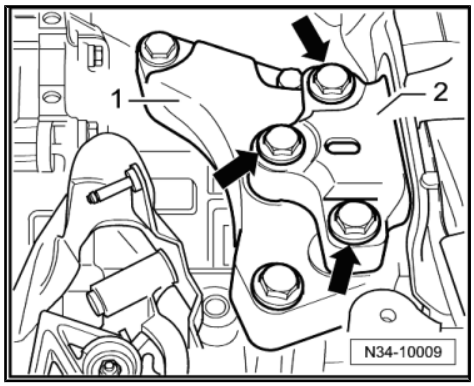

– Lower the transmission by adjusting the spindles, which are attached to the engine, to dimension -a- approximately 40 mm.

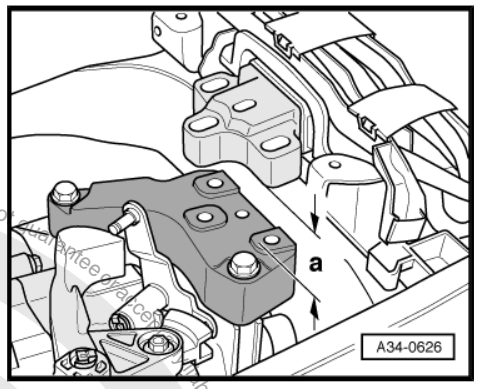

Note

When moving the engine/transmission assembly, pay attention to the connection lines, hoses and radiator.

– Remove the bracket -1- from the transmission -arrows-.

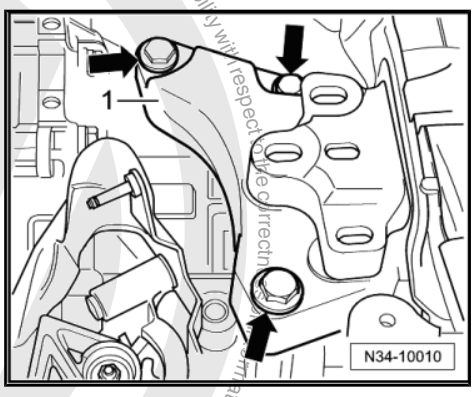

Protected by copyright. Copying for private or commercial purposes, in part or in whole, is not permitted unless authorised by Volkswagen AG. Volkswagen AG does not guarantee or accept any liability with respect to the correctness of information in this document. Copyright by Volkswagen AG.

Protected by copyright. Copying for private or commercial purposes, in part or whole, is not permitted unless authorised by Volkswagen AG. Volkswagen AG does not guarantee or accept any liability with respect to the correctness of information in this document. Copyright by Volkswagen AG.

Metal Relay Lever

– Remove the lock washer -arrow- from the relay lever -1- and then remove the relay lever.

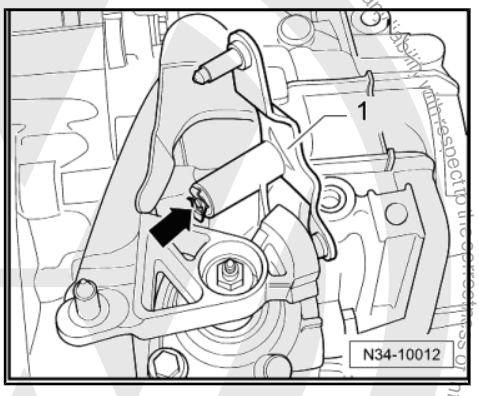

Plastic Relay Lever

– Remove the relay lever with the cable retainer ⇒ “1.8 Plastic Relay Lever”, page 89 .

Continuation for All

– Remove the gearshift lever from the gearshift shaft.

– Remove the bolt that connects the engine to the transmission -1-.

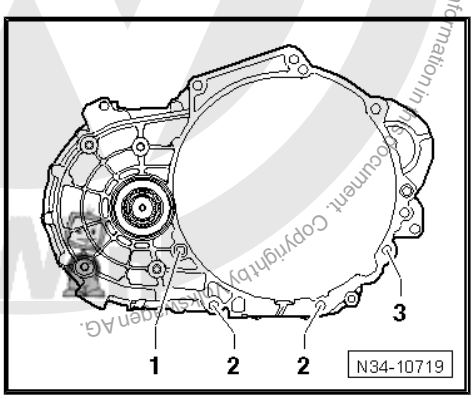

Note

Loosen the engine/transmission connecting bolt -3- and leave it in so that it is hand-tight.

– Tighten the Engine Support Bridge - Gearbox Bracket - T10346- with the bolt -1- in the left threaded hole in the subframe.

– Install the Engine Support Bridge - Gearbox Bracket - T10346- in the same angled position as the engine.

-1- = M6 x 20 collar bolt

– Secure the Engine Support Device - 3300A- on the Engine Support Bridge - Gearbox Bracket - T10346- .

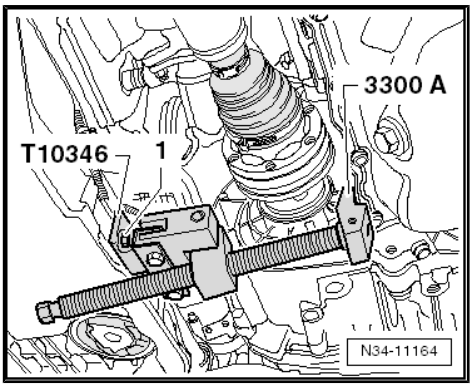

– Push the engine forward using the spindle on the Engine Support Device - 3300A- . Note the following when doing this:

- The A/C compressor -2- must not touch the refrigerant line -1- -arrow-.
- The generator must not touch the refrigerant line.
- The pressure pipe must not touch the radiator.

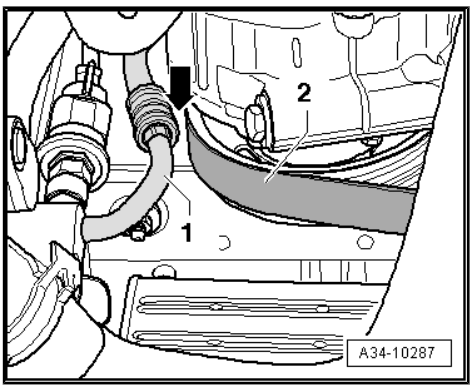

Align the Transmission Support - 3282- with the Transmission Support - Mounting Plate 33 - 3282/33- in order to remove the “02Q” transmission.

– Insert the Transmission Support - 3282- into the Engine and Gearbox Jack - VAS6931- .

– Align the arms of the Transmission Support so that they match up with the holes in the Adjustment Plate .

Protected by copyright. Copying for private or commercial purposes, in part or in whole, is not permitted unless authorised by Volkswagen AG. Volkswagen AG does not guarantee or accept any liability with respect to the correctness of information in this repair manual.

– Install the Support Elements -A- as illustrated on the Adjustment Plate .

– Install the Transmission Support - Pins 29 - 3282/29- in place of the Mounting Element -C-.

– Position the Engine-Gearbox Jack - VAG1383 A- under the vehicle. The arrow symbol -B- on the Adjusting Plate points in direction of travel.

– Align the Adjusting Plate so that it is parallel to the transmission.

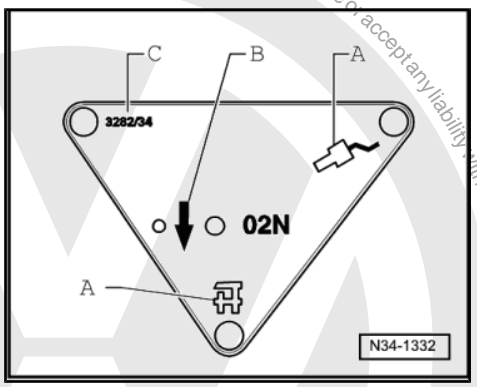

– Secure the Slide Hammer Set - Adapter 40 - VW771/40- inside the threaded hole in the transmission housing as shown.

– Install the Transmission Support - Pins 29 - 3282/29- into the hole on the transmission for the pendulum support bolt.

– Secure the transmission on the Transmission Support - 3282- with an M10 x 20 bolt -A-.

The drift -B- must be flush at the bottom with the guide on the Transmission Support - 3282- -arrow-.

– Remove the connecting bolt -C- and the lower connecting bolts.

– Separate the transmission from the engine (alignment sleeves).

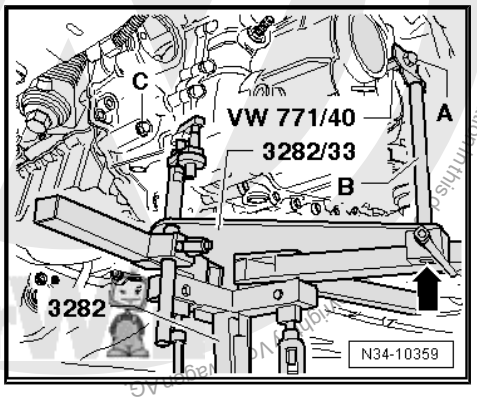

The right flange shaft -1- must be guided over the bolting eyelet of the engine -2-.

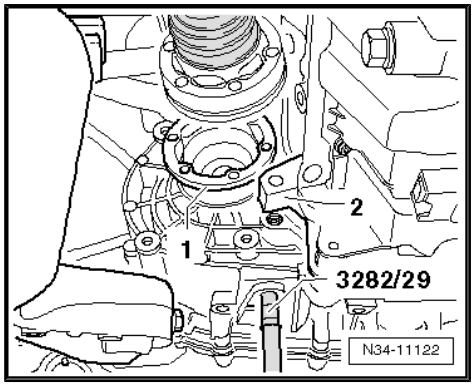

Guide the right flange shaft -1- past the flywheel and the opening -arrow- in the intermediate plate.

– Move the transmission in the area of the differential with the spindles of the Transmission Support - 3282- into an angled position.

• The differential, near the transmission, must face upward.

– Guide the transmission and the differential over the subframe -A- and swing it out.

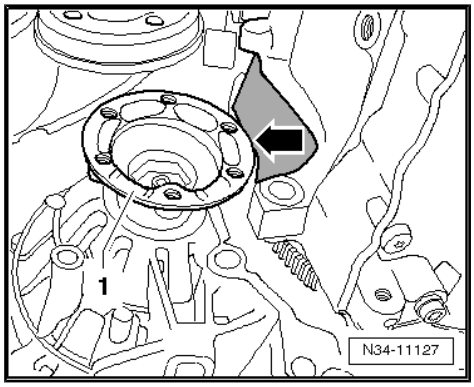

– If necessary, turn the transmission further upward in the area of the differential using the spindles of the Transmission Mount - 3282- .

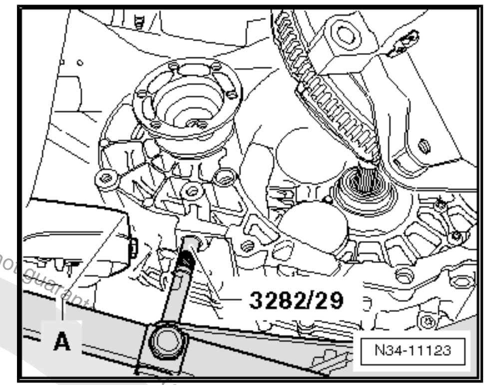

– Swivel the transmission further and carefully lower it.

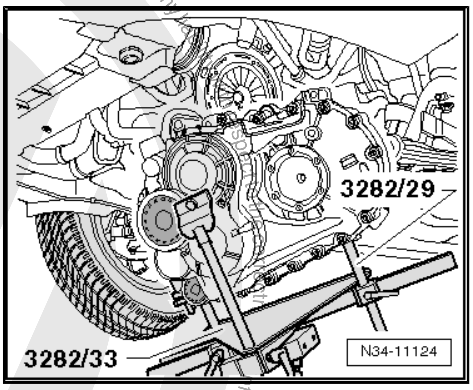

Note

Pay attention to all of the lines when lowering the transmission.

Installing

Note

- *Refer to “Transmission, Removing” to get a list of the special tools needed. Refer to* *⇒ “3.1 Transmission, Removing and Installing”, page 126* *.*
- *Replace the self-locking nuts and bolts.*
- *Replace bolts that were tightened with an additional turn.*
- *Install any cable ties that were loosened or cut off during removal at their same location.*
- *Clean input shaft splines and (on used clutch plates) the hub splines, remove corrosion and apply a very thin coating of Grease for Clutch Disc Shaft Splines - G 000 100- to the splines. Then move the clutch plate back and forth on the input shaft until the hub moves freely on the shaft. Excess grease must be removed.*

– If the transmission is replaced, transfer the transmission shift lever and the relay lever.

– Clean any locking compound residue from all threaded holes using a tap.

– Check whether there are centering sleeves for the engine/transmission in the cylinder block; install if necessary.

If the alignment sleeves are missing, it will be difficult to shift, there will be clutch problems and the transmission may make noises (loose rattling).

– Make sure the intermediate plate is engaged on the sealing flange and pushed onto the alignment sleeves -arrows-.

– Check the release bearing for wear. Replace the clutch slave cylinder with release bearing if necessary. Refer to ⇒ “2.2 Clutch Slave Cylinder with Release Bearing, Removing and Installing”, page 52 .

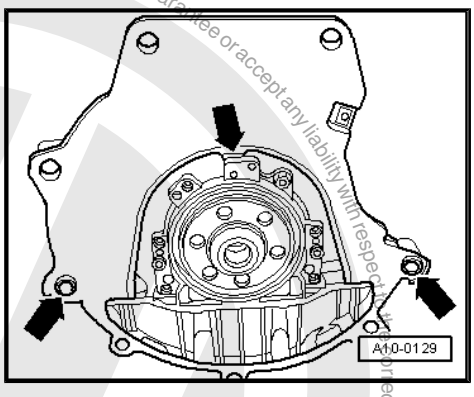

– Tighten the Engine Support Bridge - Gearbox Bracket - T10346- with the bolt -1- in the left threaded hole in the subframe.

– Install the Engine Support Bridge - Gearbox Bracket - T10346- in the same angled position as the engine.

-1- = M6 x 20 collar bolt

– Secure the Engine Support Device - 3300A- on the Engine Support Bridge - Gearbox Bracket - T10346- .

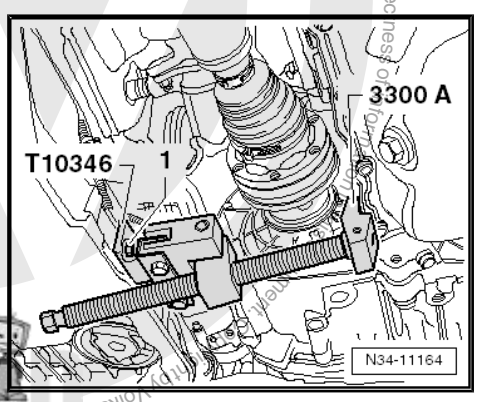

– Push the engine forward using the spindle on the Engine Support Device - 3300A- . Note the following when doing this:

• The A/C compressor -2- must not touch the refrigerant line -1- -arrow-.

• The generator must not touch the refrigerant line.

• The pressure pipe must not touch the radiator.

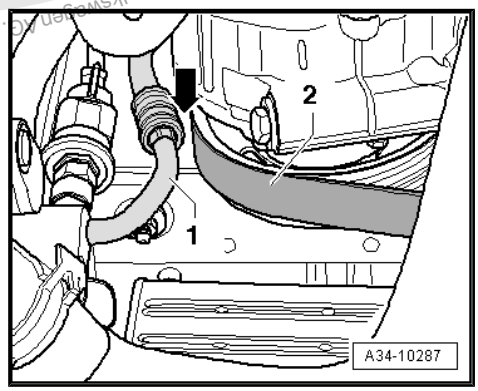

Align the Transmission Support - 3282- with the Transmission Support - Mounting Plate 33 - 3282/33- in order to install the “02Q” transmission.

– Align the arms of the Transmission Support so that they match up with the holes in the Adjustment Plate .

– Install the Support Elements -A- as illustrated on the Adjustment Plate .

– Install the Transmission Support - Pins 29 - 3282/29- in place of the Mounting Element -C-.

– Place the transmission on the Engine and Gearbox Jack - VAS6931- .

– Align the Adjustment Plate so that it is parallel to the transmission.

– Install the Transmission Support - Pins 29 - 3282/29- into the hole on the transmission for the pendulum support bolt.

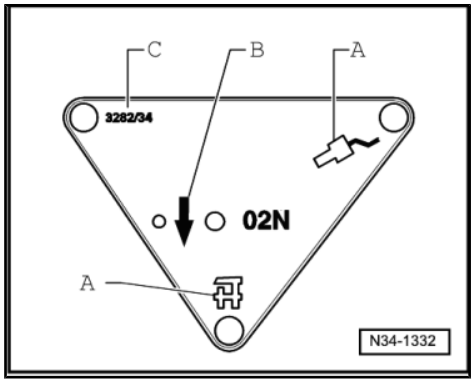

– Secure the Slide Hammer Set - Adapter 40 - VW771/40- inside the threaded hole in the transmission housing as shown.

– Secure the transmission on the Transmission Support - 3282- with an M10 x 20 bolt -A-.

The drift -B- must be flush at the bottom with the guide on the Transmission Support - 3282- -arrow-.

– Position the Engine and Gearbox Jack - VAS6931- under the vehicle. The arrow on the adjusting plate points in direction of travel.

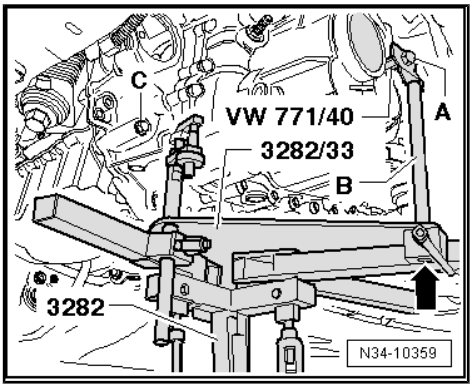

Note

Pay attention to all of the lines when installing the transmission.

– Using the spindles of the Transmission Support - 3282- , adjust the transmission so that the differential area is rotated in direction of -arrow- upward.

– Lift the transmission carefully.

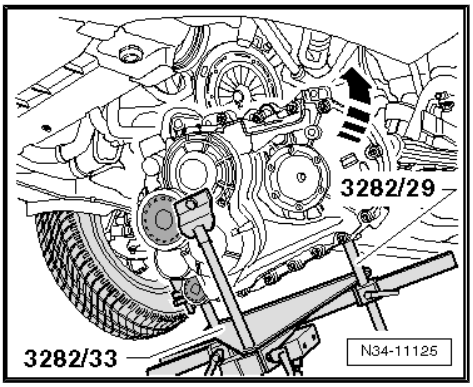

– Guide the transmission and differential -A- over the subframe.

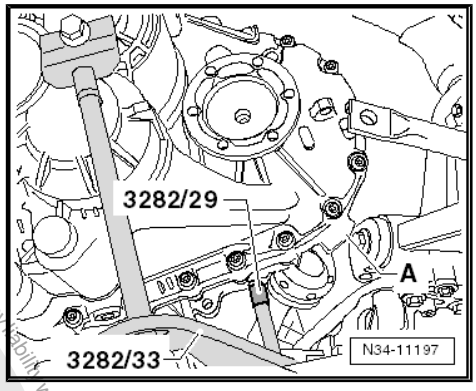

– Pay attention to the longitudinal member -arrows-.

– Move the transmission toward the rear to the subframe.

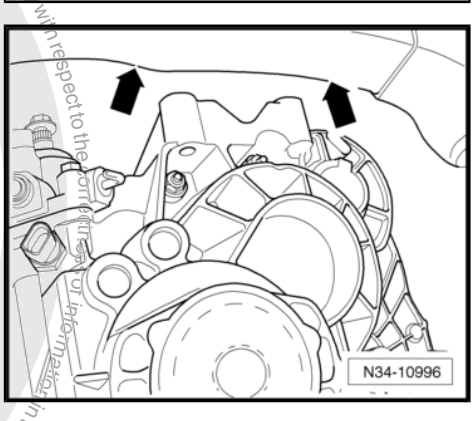

Protected by copyright. Copying for private or commercial purposes, in part or in whole, is not permitted unless authorised by Volkswagen AG. Volkswagen AG does not guarantee or accept any liability with respect to the correctness of information in this document. Copyright by Volkswagen AG.

Protected by copyright. Copying for private or commercial purposes, in part or in whole, is not permitted unless authorised by Volkswagen AG. Volkswagen AG does not guarantee or accept any liability with respect to the correctness of information in this document. Copyright by Volkswagen AG.

- After that, the right flange shaft -1- must be guided past the flywheel and the cut-out -arrow- in the intermediate plate.

– Turn the transmission to its installed position using the spindles of the Transmission Support - 3282- .

– Align the transmission to the engine (alignment sleeves) and insert it.

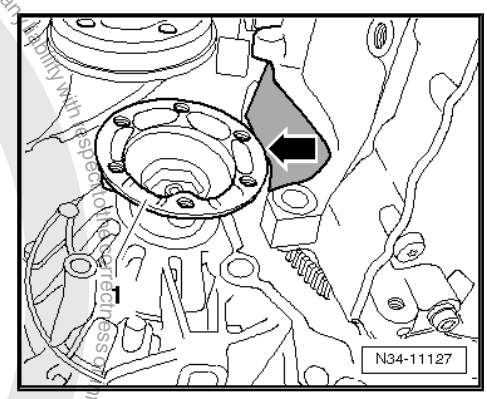

– Insert engine/transmission bolt -C- and tighten to tightening specification. Refer to
⇒ “3.2 Tightening Specifications”, page 143 .

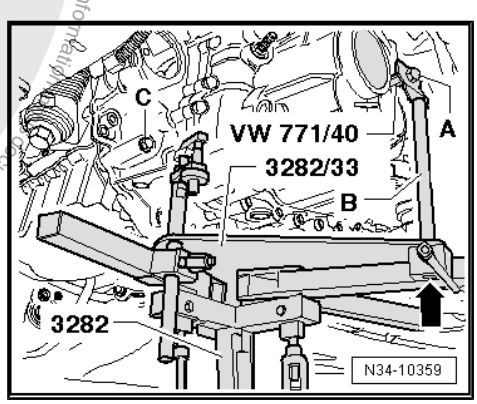

– Install the engine/transmission connecting bolt -arrow- and tighten it to the tightening specification. Refer to
⇒ “3.2 Tightening Specifications”, page 143 .

– Remove the Engine Support Device - 3300A- and Engine Support Bridge - Gearbox Bracket - T10346- .

– Install lower engine/transmission connecting bolts and tighten to tightening specification. Refer to
⇒ “3.2 Tightening Specifications”, page 143 .

– After transmission is bolted to engine at bottom, remove the Transmission Support - 3282- from transmission.

– Install the upper engine/transmission connecting bolts and tighten them to the tightening specification. Refer to
⇒ “3.2 Tightening Specifications”, page 143 .

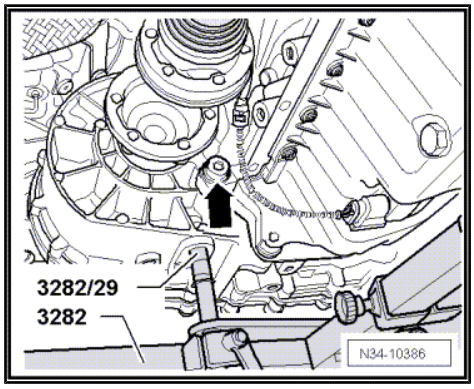

– Attach the transmission gearshift lever to the gearshift shaft. Refer to
⇒ Fig. ““Installing the Transmission Shift Lever”“ , page 88 and tighten the nut to tightening specification -item 17-
⇒ Item 17 (page 87) .

Metal Relay Lever

– Install the relay lever -1- and the lock washer -arrow-.

Plastic Relay Lever

– Install the relay lever with the cable retainer. Refer to
⇒ “1.8 Plastic Relay Lever”, page 89 .

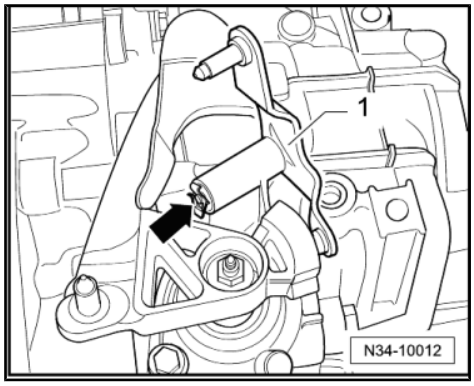

Continuation for All

– Attach the bracket -1- with the new hex bolts to the transmission -arrows- and tighten them to the tightening specification. Refer to ⇒ “3.2 Tightening Specifications”, page 143 .

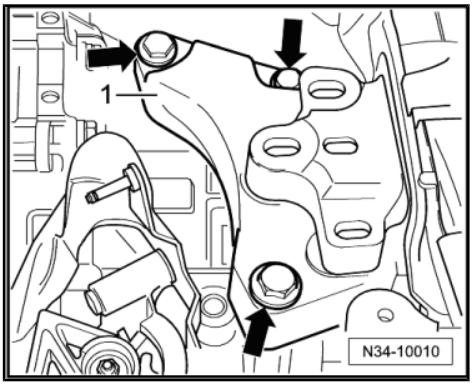

– Align the engine/transmission in its installed position. Lift it until the bracket -1- is in complete contact with the left subframe mount -2-.

– Install the new hex bolts -arrows- of the left subframe mount -2- in the bracket -1- and tighten to the tightening position. Refer to ⇒ “3.2 Tightening Specifications”, page 143 .

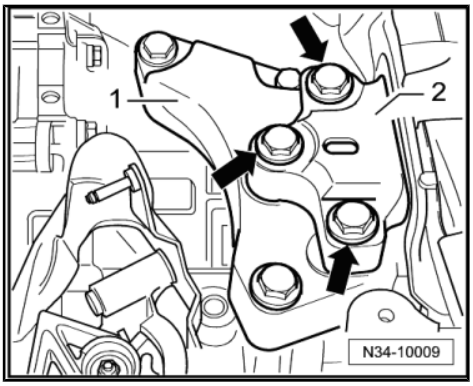

Note

Install the engine/transmission mount free of tension. Refer to ⇒ Rep. Gr. 10 ; Engine, Removing and Installing .

WARNING

Only remove the Engine Support Bridge - 10-222A- when all subframe mount bolts are tightened to the tightening specification.

– Install the flywheel cover plate -A- (if equipped) -arrows-. Refer to ⇒ “3.2 Tightening Specifications”, page 143 .

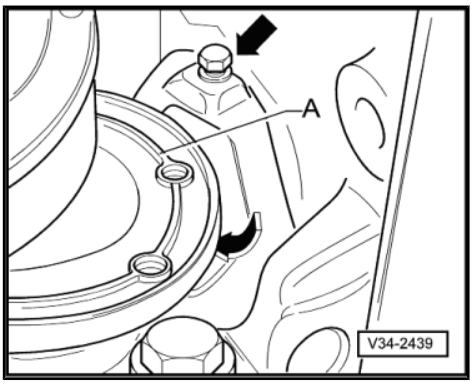

Note

- *There are threaded inserts (for example “Heli Coil”) in the pendulum support fastening holes.*
- *How to recognize: there is a collar on the first thread -arrow-.*
- *Observe the correct bolts and tightening specifications. Refer to ⇒ Suspension, Wheels, Steering; Rep. Gr. 40 ; Subframe, Overview - Subframe .*

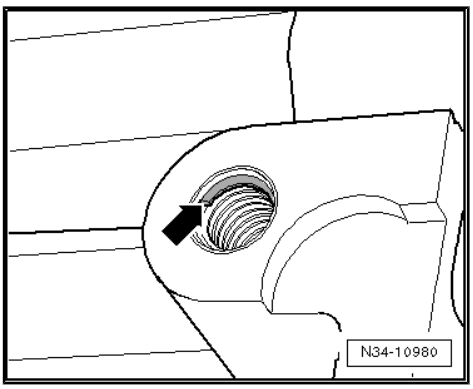

Protected by copyright. Copying for private or commercial purposes, in part or in whole, is not permitted unless authorised by Volkswagen AG. Volkswagen AG does not guarantee or accept any liability with respect to the correctness of information in this document. Copyright by Volkswagen AG.

– Install the pendulum support. Refer to ⇒ Suspension, Wheels, Steering; Rep. Gr. 40 ; Subframe; Overview - Subframe .
– Assemble the exhaust system. Refer to ⇒ Rep. Gr. 26 .
– Install the drive axles. Refer to ⇒ Suspension, Wheels, Steering; Rep. Gr. 40 ; Drive Axles, Removing and Installing .

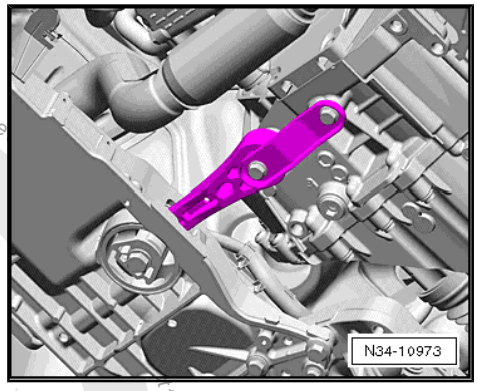

– If equipped install the drive axle heat shield -arrows-. Refer to ⇒ Suspension, Wheels, Steering; Rep. Gr. 40 ; Drive Axles, Overview and Servicing; Drive Axle Heat Shield .
– Install the left coupling rod. Refer to ⇒ Suspension, Wheels, Steering; Rep. Gr. 40 .

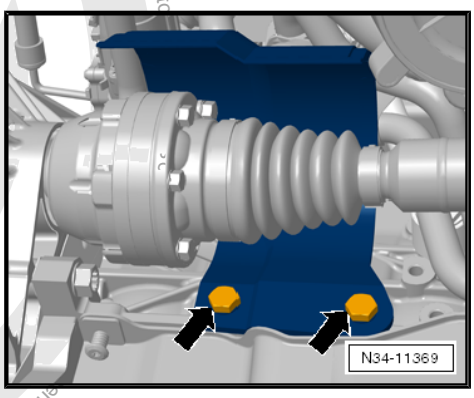

– Install the Left Front Level Control System Sensor - G78- in the control arm, if equipped. Refer to ⇒ Rep. Gr. 40 .

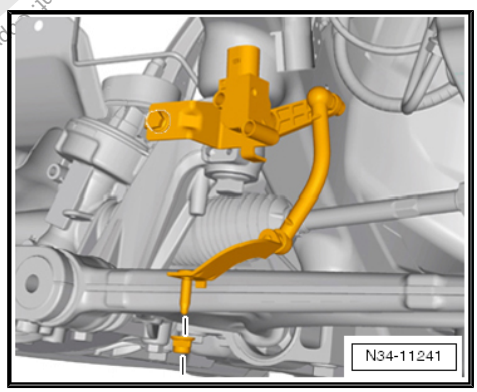

– Connect the connector -1- to the Oil Level Thermal Sensor - G266- .

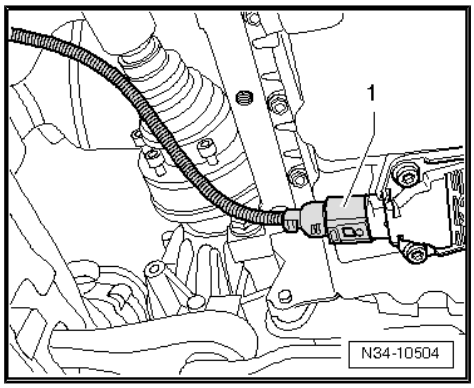

Protected by copyright. Copying for private or commercial purposes, in part or in whole, is not permitted unless authorised by Volkswagen AG. Volkswagen AG does not guarantee or accept any liability with respect to the correctness of information in this document. Copyright by Volkswagen AG.

– Install the air shroud -arrow- and the radiator fans. Refer to ⇒ Rep. Gr. 19

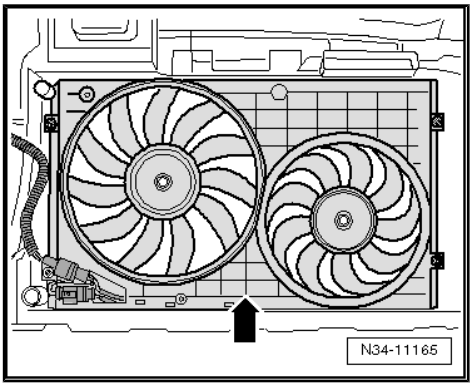

– Install the charge air hoses -arrow 1 and arrow 2- and then connect the charge air pipe to the engine. Refer to ⇒ Rep. Gr. 21 .
– Position the starter and install the lower bolt. Refer to ⇒ Electrical Equipment; Rep. Gr. 27 ; Starter; Starter, Removing and Installing .
– Attach the bracket for the lines to the lower starter bolt.
– Install the starter bolt and then connect the connector and wires to the starter. Refer to ⇒ Electrical Equipment; Rep. Gr. 27 ; Starter; Starter, Removing and Installing .

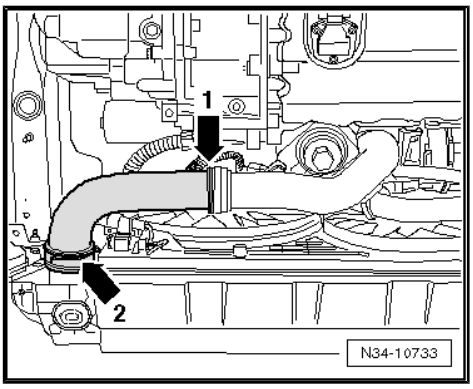

– Attach the ground cable -1- to the top starter bolt.
– Connect the connector -2- to the Back-Up Lamp Switch - F4- .

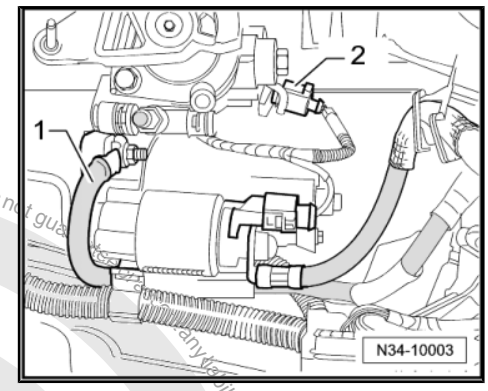

– Push the hose/line assembly or pipe -A- into the bleeder/clutch slave cylinder to the stop and push the clamp -arrow- downward.
– Pull on the line to make sure it is secure.
– Remove the Hose Clamp - 3094- from the supply hose.
– After removing the Hose Clamps - Up To 25mm - 3094- , bring the return hose back to its original shape.
– Bleed the clutch mechanism. Refer to ⇒ “1.10 Clutch Mechanism, Bleeding”, page 48 .
– Make sure the vacuum hose for the brake system is installed correctly. Refer to ⇒ Brake System; Rep. Gr. 47 ; Hydraulic System .

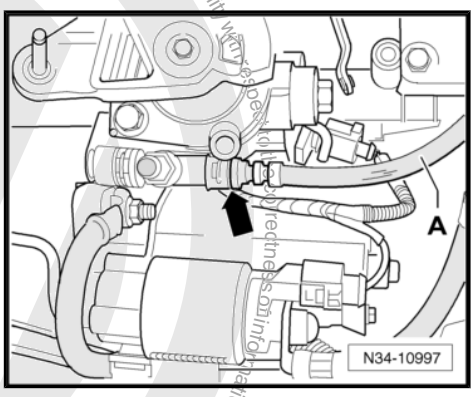

Protected by copyright. Copying for private or commercial purposes, in part or in whole, is not permitted unless authorised by Volkswagen AG. Volkswagen AG does not guarantee or accept any liability with respect to the correctness of information in this document. Copyright by Volkswagen AG.

– Attach the cable mounting bracket to the transmission and tighten the bolts and nuts -arrows- to the tightening specification -item 6- ⇒ Item 6 (page 86) and -item 10- ⇒ Item 10 (page 86) .

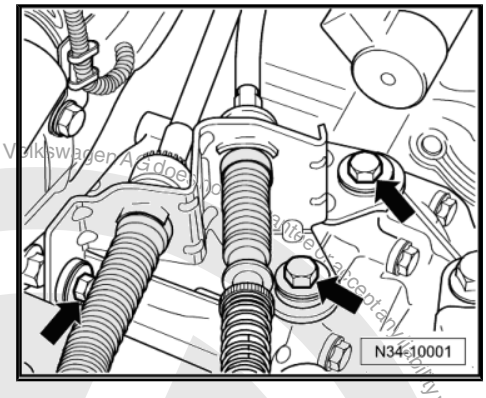

– Apply a small amount of grease to the pin -arrow- on the gearshift lever -1-.

Refer to the Parts Catalog for the grease allocation.

– Slide the shift cable onto the respective pins -arrow- and secure it with a new lock washer -3-.

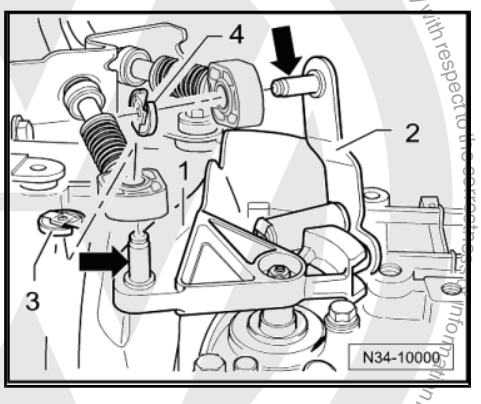

Metal Relay Lever

– Apply a small amount of grease to the pin -arrow- of the relay lever -2-.

Refer to the Parts Catalog for the grease allocation.

– Slide the selector cable onto the respective pins -arrow- and secure it with a new lock washer -4-.

Plastic Relay Lever

– Insert the selector cable into the cable retainer.

Continuation for All

– Adjust the gearshift mechanism. Refer to ⇒ “1.11 Selector Mechanism, Adjusting”, page 97 .

– Install the battery tray, battery cover and the battery. Refer to ⇒ Electrical Equipment; Rep. Gr. 27 ; Battery; Battery, Removing and Installing .

– Install the air filter housing, if it was removed earlier. Refer to ⇒ Rep. Gr. 24 ; Air Filter; Air Filter Housing, Removing and Installing .

– Install the plenum chamber cover and seal. Refer to ⇒ Body Exterior; Rep. Gr. 50 ; Plenum Chamber Cover; Plenum Chamber Cover, Removing and Installing .

– Attach the foam pieces to the upper edges on the left and right fenders. Refer to ⇒ Body Exterior; Rep. Gr. 50 ; Fender .

– Install the engine cover if necessary.

– Connect the battery and observe procedure after connecting battery. Refer to ⇒ Electrical Equipment; Rep. Gr. 27 ; Battery; Battery, Disconnecting and Connecting .

– Check the transmission fluid level. Refer to ⇒ “8 Transmission Fluid, Checking”, page 192 .

– Install the lower part of the left front wheel housing liner. Refer to ⇒ Body Exterior; Rep. Gr. 66 ; Wheel Housing Liner .

– Install the noise insulation. Refer to ⇒ Body Exterior; Rep. Gr. 50 ; Noise Insulation .

– Check the headlamp adjustment if the vehicle has a Left Front Level Control System Sensor - G78- . Refer to ⇒ Electrical Equipment; Rep. Gr. 94 ; Headlamps; Headlamp, Adjusting .

Protected by copyright. Copying for private or commercial purposes, in part or in whole, is not permitted unless authorised by Volkswagen AG. Volkswagen AG does not guarantee or accept any liability with respect to the correctness of information in this document. Copyright by Volkswagen AG.

3.2 Tightening Specifications

Transmission to Engine (Engine Flange Face)

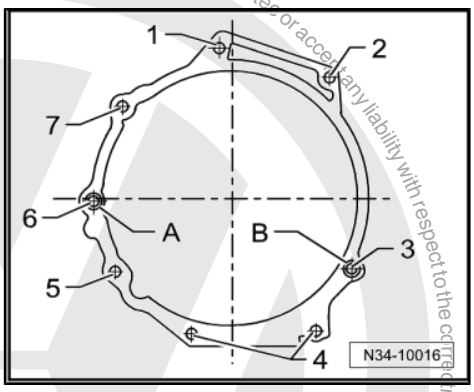

Item	Bolt	Quantity	Nm
1	M12 x 55 ◆ With a short M8 threaded pin	1	80
2	M12 x 55 ◆ With a long threaded pin M8	1	80
3	M12 x 65	1	80
4	M10 x 50	2	40
5	M10 x 105	1	40
6	M12 x 165 ◆ With a short M8 threaded pin ◆ Also starter to transmission	1	80
7	M12 x 165 ◆ With a short M8 threaded pin ◆ Also starter to transmission	1	80
-	M6 x 8 ◆ Small flywheel cover plate (not present on all engines)	1	10

-A- and -B-: alignment bushings

Transmission Bracket -1- to Transmission.

– Replace the bolts.

Tighten the bolts -arrows-: 60 Nm + 90°.

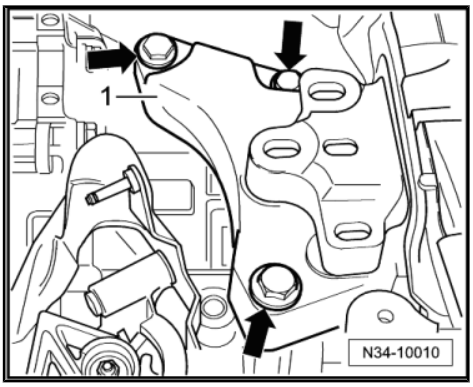

Protected by copyright. Copying for private or commercial purposes, in part or in whole, is not permitted unless authorised by Volkswagen AG. Volkswagen AG does not guarantee or accept any liability with respect to the correctness of information in this document. Copyright by Volkswagen AG.

Transmission to Body

– Replace the bolts.

Tighten the bolts -arrows-: 60 Nm + 90°.

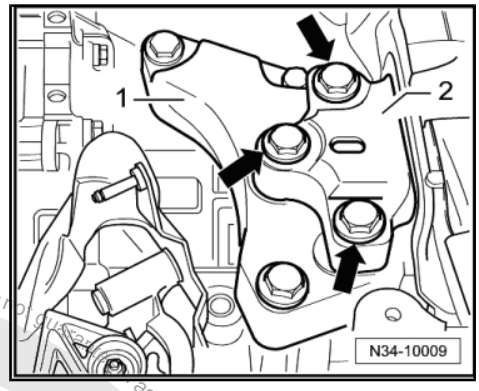

Note

Install the engine/transmission mount free of tension. Refer to ⇒ Rep. Gr. 10 ; Engine, Removing and Installing.

Protected by copyright. Copying for private or commercial purposes, in part or in whole, is not permitted unless authorised by Volkswagen AG. Volkswagen AG does not give any guarantee or accept any liability with respect to the correctness of information in this document. Copyright by Volkswagen AG.

4 Transmission, Removing and Installing, Jetta from MY 11, Diesel and Gasoline

⇒ "4.1 Transmission, Removing and Installing", page 145
⇒ "6 Transmission, Transporting", page 189
⇒ "4.2 Tightening Specifications", page 164

4.1 Transmission, Removing and Installing

Special tools and workshop equipment required

- Engine Support Bridge - 10-222A-
- Transmission Support - 3282-
- Engine and Gearbox Jack - VAS6931-
- Tensioning Strap - T10038-
- Engine Support - Basic Set - T40091-
- Engine Support - Supplement Kit - T40093A-
- Slide Hammer Set - Adapter 40 - VW771/40- from the Slide Hammer Set - VW771-
- Hose Clamps - Up To 25mm - 3094-
- Transmission Support - Pins 29 - 3282/29-
- Transmission Support - Mounting Plate 33 - 3282/33-
- Support Elements for transmission (determine when mounting the Mounting Plate on the Transmission Support)
- Grease for Clutch Disc Shaft Splines - G 000 100-
- Allocate the grease for gearshift mechanism. Refer to the Parts Catalog.
- M10 x 20 hex bolt

Removing

– See if a coded radio is installed. If so, obtain the anti-theft code.

– Disconnect the battery ground cable. Refer to ⇒ Electrical Equipment; Rep. Gr. 27 ; Battery; Battery, Disconnecting and Connecting .

– Remove the engine cover. Refer to ⇒ Rep. Gr. 15 ; Cylinder Head; Engine Cover, Removing and Installing .

– Remove the complete air filter housing. Refer to ⇒ Rep. Gr. 23 ; Diesel Direct Injection System; Air Filter Housing, Removing and Installing or ⇒ Rep. Gr. 24 ; Air Filter; Air Filter Housing, Removing and Installing .

Volkswagen AG. Volkswagen AG does not guarantee or accept any liability with respect to the correctness of information in this document. Copyright by Volkswagen AG. Protected by copyright. Copying for private or commercial purposes, in part or in whole, is not permitted unless authorised by Volkswagen AG.

– Remove the battery and the battery tray. Refer to ⇒ Electrical Equipment; Rep. Gr. 27 ; Battery; Battery, Removing and Installing .

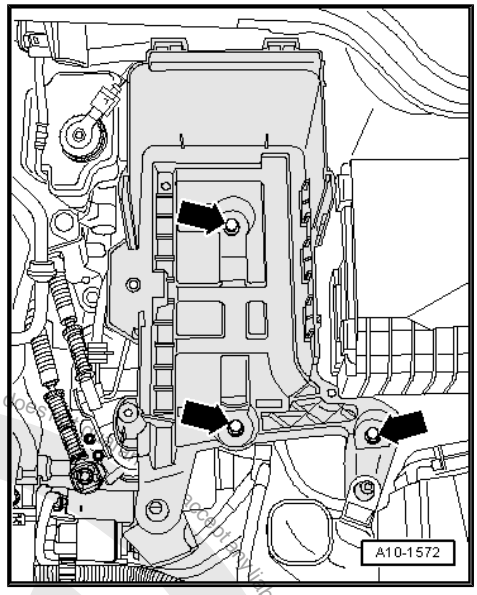

– Remove the shift cable lock washer -1- from the transmission shift lever -2- and remove the cable from the pin -arrow-.

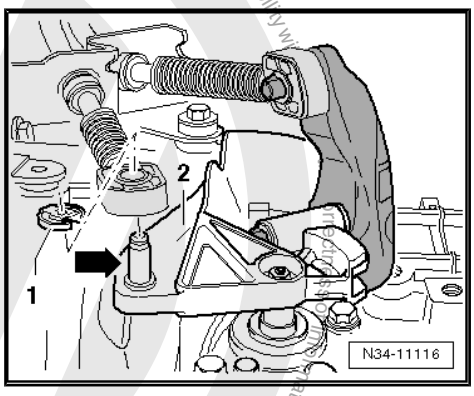

– Remove the cable retainer from the selector cable.

• To avoid damage to the selector cable, the cable retainer must be disconnected from the selector lever before removal.

– Pull the securing mechanism all the way forward in direction of -arrow 1- and then unlock to the left in direction of -arrow 2-.

– Press the relay lever forward (in the direction of -arrow 3-).

– The relay lever is removed together with the cable retainer later in the procedure.

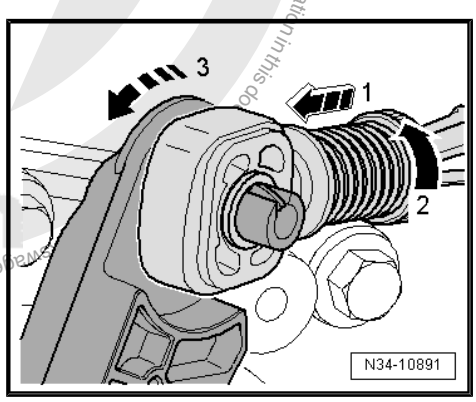

– Remove the cable bracket from the transmission -arrows-, move it to the side and tie it up.

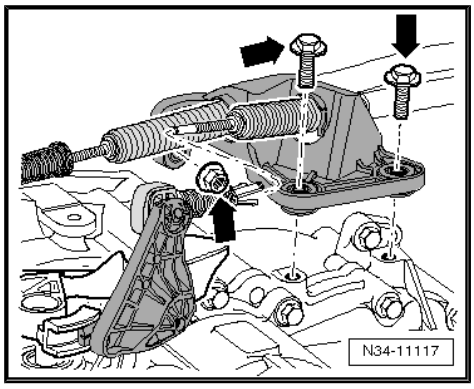

Protected by copyright. Copying for private or commercial purposes, in part or in whole, is not permitted unless authorised by Volkswagen AG. Volkswagen AG does not guarantee or accept any liability with respect to the correctness of information in this document.

Vehicles with A Pipe between the Clutch Master and Slave Cylinders

– Clamp the clutch master cylinder hose using a Hose Clamps - Up To 25mm - 3094- .

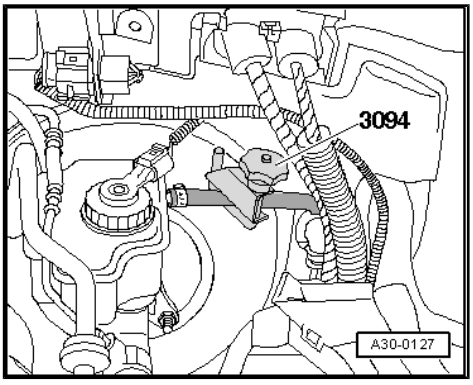

Vehicles with A Hose/Line Assembly between the Clutch Master and Slave Cylinders

– Clamp off the hose on the hose/line assembly -A- to the clutch slave cylinder using the Hose Clamps - Up To 25mm - 3094- .

Continuation for All

– Pull the clamp -arrow- for the hose/line assembly or the pipe out all the way to the stop.

– Remove the hose/line assembly or pipe from the bleeder/ clutch slave cylinder and seal it off.

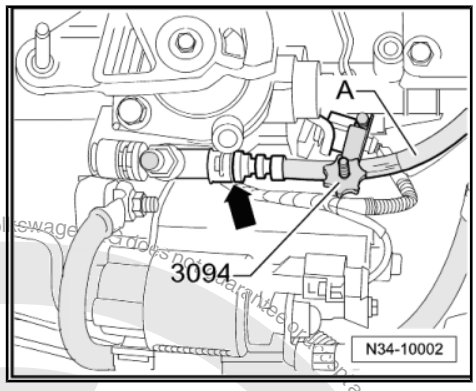

> ⚠ **Caution**
>
> ***Do not press the clutch pedal anymore.***

– Remove the ground cable -1- from the top starter bolt.

– Disconnect the connector -2- from the Back-Up Lamp Switch - F4- .

– Disconnect the connector and the wire from the starter.

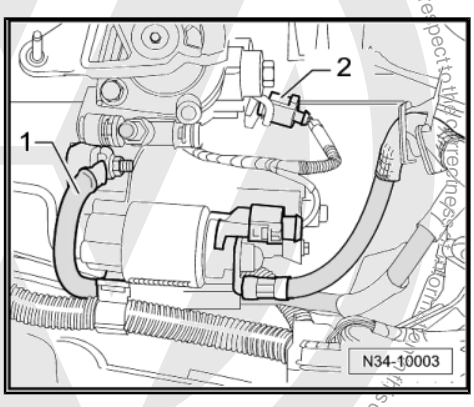

– Remove the upper engine/transmission connecting bolts -arrows-.

– Remove the upper bolt from the starter.

– Remove the plenum chamber cover. Refer to ⇒ Body Exterior; Rep. Gr. 50 ; Plenum Chamber Cover; Plenum Chamber Cover, Removing and Installing .

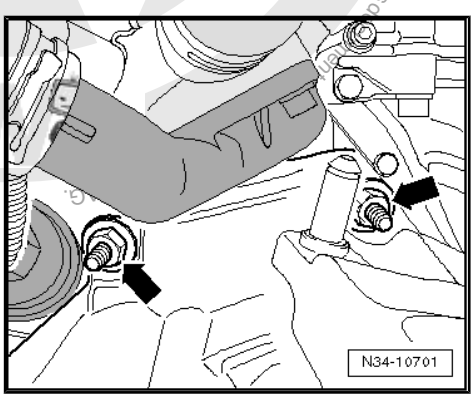

Protected by copyright. Copying for private or commercial purposes, in part or in whole, is not permitted unless authorised by Volkswagen AG. Volkswagen AG does not guarantee or accept any liability with respect to the correctness of information in this document.

– Remove the bolts -arrows- for the left and right lock carrier retaining brackets.

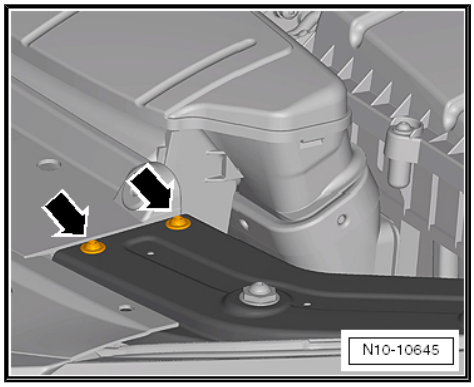

– Remove the lower mounts on the Engine Support Bridge - Engine Support 28 - 10-222A/28- and replace them with the Engine Support Bridge - Engine Support 28-2 - 10-222A/28-2- .

– Remove the bolts -arrows- for securing the engine support bridge on the lock carrier from the Engine Support Bridge - Engine Support 28-2 - 10-222A/28-2- .

• Use the bolts in the Engine Support Bridge - Engine Support 28-2 - 10-222A /28-2- for attaching the Engine Support Bridge - Engine Support 28 - 10-222A /28- . Not the bolts for the retaining bracket.

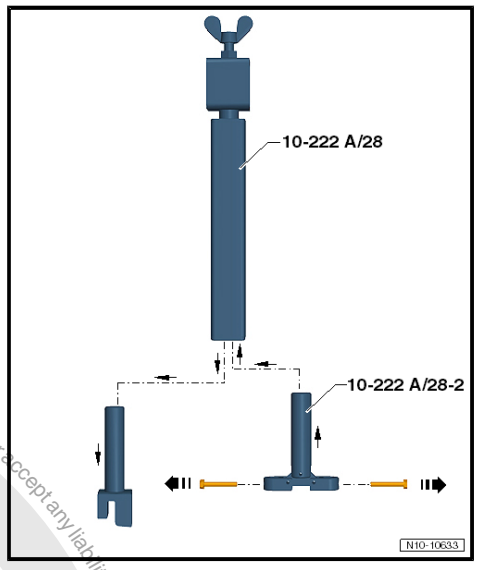

– Install the Engine Support Bridge - Engine Support 28 - 10-222A/28- and tighten the bolts to 8 Nm -arrows-.

Caution

A second technician is needed to mount the Engine Support Bridge - 10-222A- on the vehicle to prevent the Engine Support Bridge - 10-222A- from tipping.

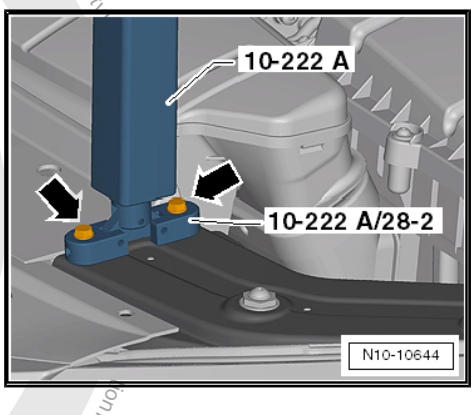

– If there are hose and cable connections located near the engine lifting eyes for the Engine Support Bridge - 10-222A- , these must now be removed.

Vehicles with Diesel Engines

Install the Engine Support Bridge - 10-222A- as shown.

– First slide the Moveable Joints -2- onto the Square Pipe from the Engine Support Bridge - 10-222A- .

– Mount the Engine Support Bridge - 10-222A- on the suspension strut towers and have a second technician hold it to prevent it from tipping.

– Push the Engine Support - Basic Set - Square Pipe - T40091/1- -6- from the front left and right through the Engine Support Bridge - Engine Support 28 - 10-222A/28- -7- and place on each side of the Engine Support - Supplement Kit - Movable Joint - T40093/4- -5-.

– Slide the Engine Support - Basic Set - Rail with Holes - T40091/2- -4- with the Engine Support - Supplement Kit Mount

Protected by copyright. Copyright © Volkswagen AG. Volkswagen AG does not guarantee or accept any liability for any whole or part of this document, unless authorised by Volkswagen AG. Volkswagen AG does not guarantee or accept any liability for any whole or part of this document. Copyright © Volkswagen AG.

- T40093/5- -9- in the Engine Support - Supplement Kit - Moveable Joint - T40093/4- -5-.

– Install the locking pins into the Engine Support - Basic Set - Rail with Holes - T40091/2- -4- and secure it with the cotter pins.

1 - Engine Support Bridge - Engine Support 31 - Adapter 2 - 10-222A/31-2-

2 - Engine Support - Basic Set - Moveable Joint - T40091/3-

3 - Engine Support Bridge - Engine Support 31 - Adapter 1 - 10-222A/31-1-

4 - Engine Support - Basic Set - Rail with Holes - T40091/2-

5 - Engine Support - Supplement Kit - Movable Joint - T40093/4-

6 - Engine Support - Basic Set - Square Pipe - T40091/1-

7 - Engine Support Bridge - Engine Support 28 - 10-222A/28- with Engine Support Bridge - Engine Support 28-2 - 10-222A/28-2-

8 - Engine Support Bridge - Spindle - 10-222A/11-

9 - Engine Support - Supplement Kit - Mount 5 - T40093/5-

10 - Engine Support - Bracket w/Spindle and Hook - 10-222A/10-

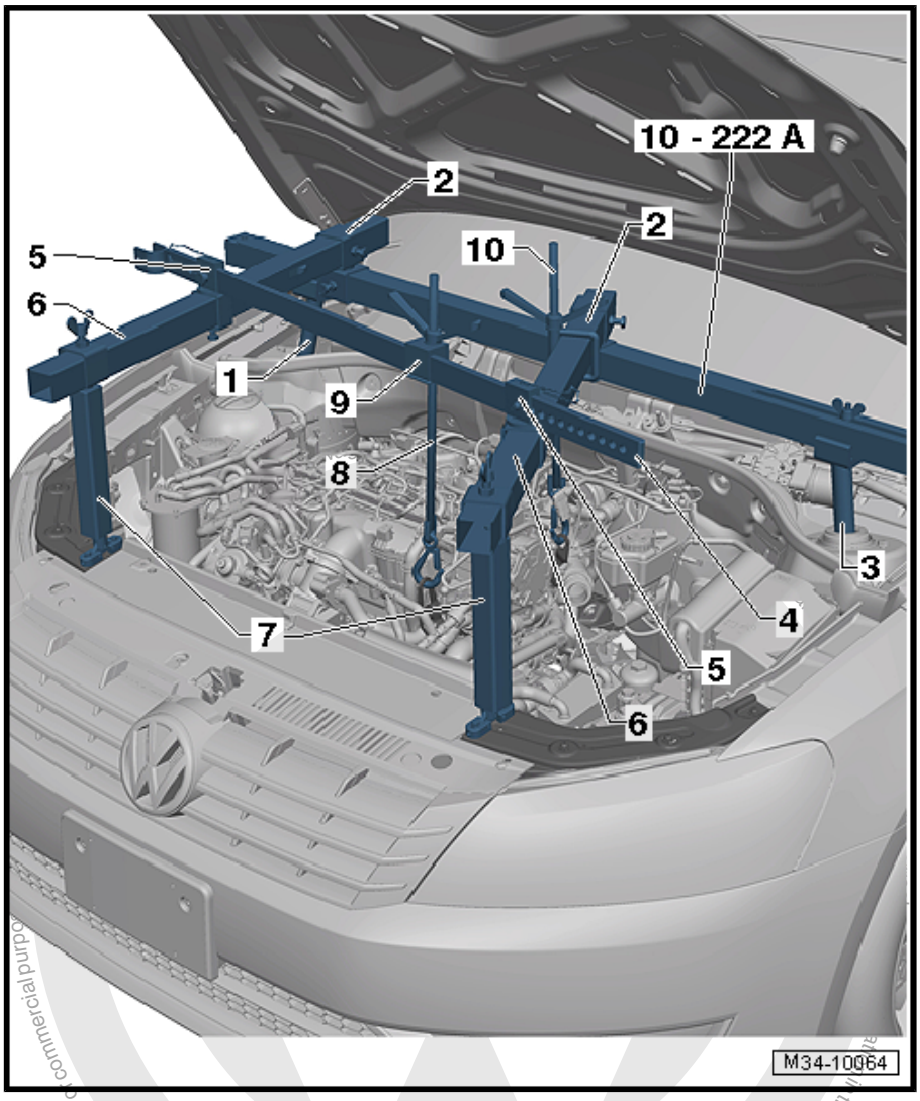

Vehicles with Gasoline Engine

Install the Engine Support Bridge - 10-222A- as shown.

– First slide the Moveable Joints -2- onto the Square Pipe from the Engine Support Bridge - 10-222A- .

– Mount the Engine Support Bridge - 10-222A- on the suspension strut towers and have a second technician hold it to prevent it from tipping.

– Push the Engine Support - Basic Set - Square Pipe - T40091/1- -5- from the front left and right through the Engine Support Bridge - Engine Support 28 - 10-222A /28- -6- and place on each side of the Engine Support - Supplement Kit - Movable Joint - T40093/4- -4-.

– Push the Engine Support - Basic Set - Rail with Holes - T40091/2- -7- with the Engine Support - Supplement Kit - Mount - T40093/5- -8- in the Engine Support - Supplement Kit - Movable Joint - T40093/4- -4-.

Protected by copyright. Copying for private or commercial purposes, in part or in whole is not permitted unless authorized by Volkswagen AG. Copyright by Volkswagen AG.

– Install the locking pins into the Engine Support - Basic Set - Rail with Holes - T40091/2- -7- and secure it with the cotter pins.

1 - Engine Support Bridge - Engine Support 31 - Adapter 2 - 10-222A/31-2-

2 - Engine Support - Basic Set - Moveable Joint - T40091/3-

3 - Engine Support Bridge - Engine Support 31 - Adapter 1 - 10-222A/31-1-

4 - Engine Support - Supplement Kit - Movable Joint - T40093/4-

5 - Engine Support - Basic Set - Square Pipe - T40091/1-

6 - Engine Support Bridge - Engine Support 28 - 10-222A/28- with Engine Support Bridge - Engine Support 28-2 - 10-222A/28-2-

7 - Engine Support - Basic Set - Rail with Holes - T40091/2-

8 - Engine Support - Supplement Kit - Mount 5 - T40093/5-

9 - Engine Support Bridge - Spindle - 10-222A/11-

❑ Engaged in the engine lifting eye -arrow-.

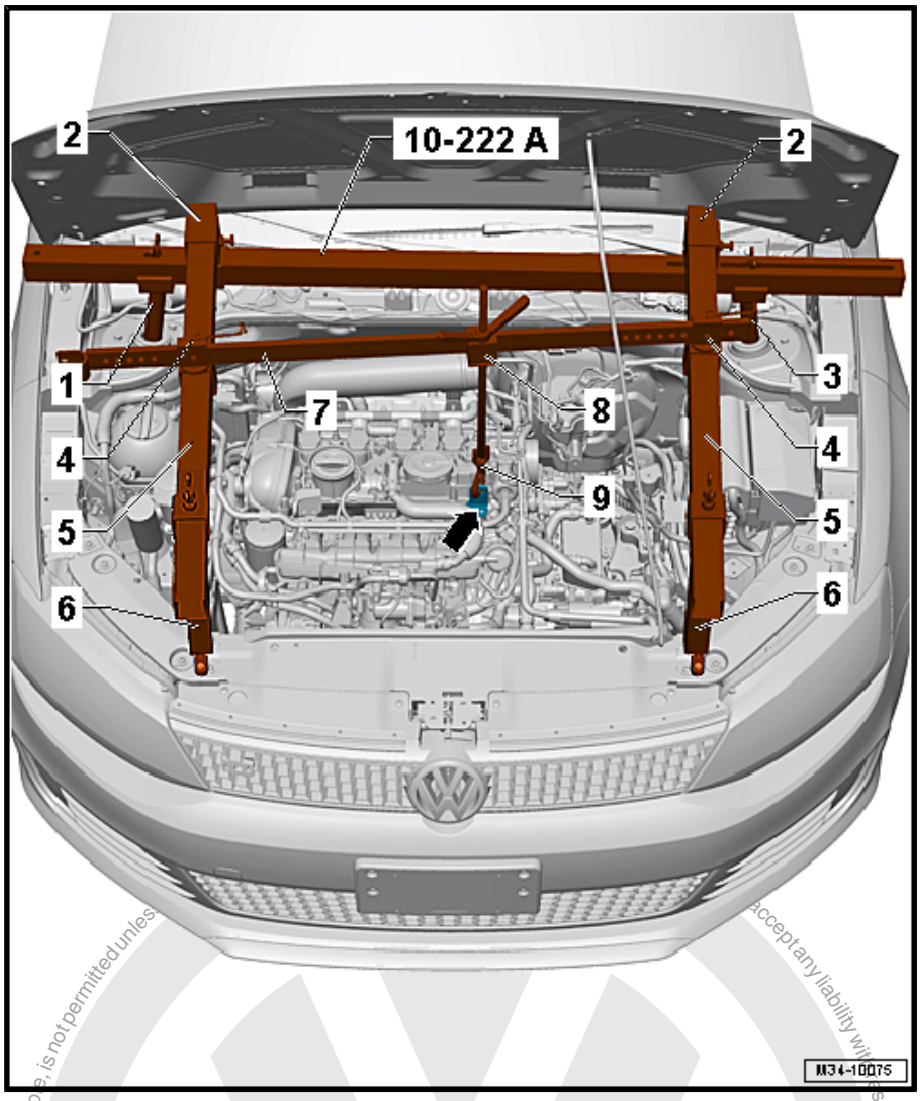

All Vehicles

– Tighten all the threaded connections on the Engine Support Bridge - 10-222A- hand-tight. While doing so, adjust the height of the Engine Support Bridge - 10-222A- parallel over the Engine Support Bridge - Engine Support 28 - 10-222A/28- .

– Pretension the engine/transmission assembly with the spindles, but do not lift.

Protected by copyright. Copying for private or commercial purposes, in part or in whole, is not permitted unless authorised by Volkswagen AG. Copyright by Volkswagen AG. We accept any liability with respect to the correctness of information in this document.

The left drive axle must be removed later in the procedure.

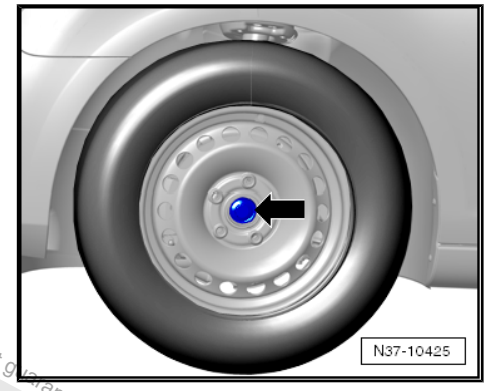

- With the vehicle still standing on its wheels, loosen the left front collar bolt -arrow- a maximum 90°, otherwise the wheel bearing will get damaged. Refer to ⇒ Suspension, Wheels, Steering; Rep. Gr. 40 ; Drive Axles, Removing and Installing .
- Loosen the left front wheel bolts.
- Lift the vehicle, all four take-up points of lifting platform at the same height.
- Remove the left front wheel.
- Remove the noise insulation. Refer to ⇒ Body Exterior; Rep. Gr. 50 ; Noise Insulation .
- Remove the left front housing liner. Refer to ⇒ Body Exterior; Rep. Gr. 66 ; Wheel Housing Liner; Front Wheel Housing Liner, Removing and Installing .

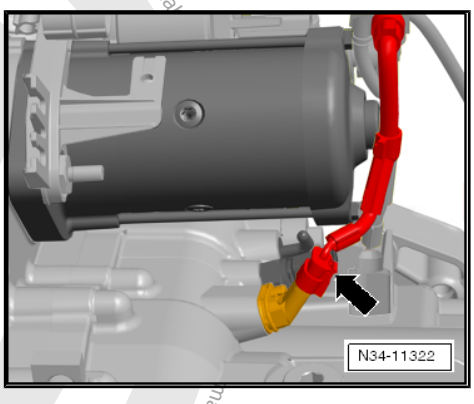

- Transmission on vehicles with Start/Stop System: disconnect the connector -arrow- from the Transmission Neutral Position Sensor - G701- .
- Remove the bracket from the starter.
- Remove the starter. Refer to ⇒ Electrical Equipment; Rep. Gr. 27 ; Starter; Starter, Removing and Installing .

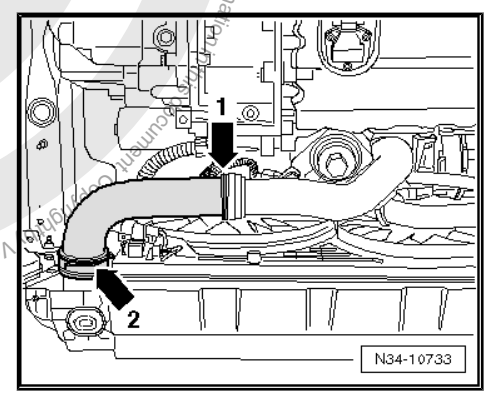

- Remove the left charge air hose -arrow 1 and arrow 2- ⇒ Rep. Gr. 21 .
- Remove the charge air pipe from the engine. Refer to ⇒ Rep. Gr. 21 .
- Remove the right charge air hose from the charge air cooler. Refer to ⇒ Rep. Gr. 21 .

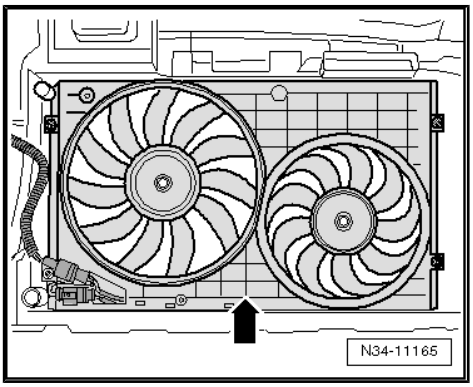

- Remove the air shroud -arrow- and the radiator fans. Refer to ⇒ Rep. Gr. 19

Protected by copyright. Copying for private or commercial purposes, in part or in whole, is not permitted unless authorised by Volkswagen AG. Volkswagen AG does not guarantee or accept any liability with respect to the correctness and completeness of this document. Copyright by Volkswagen AG.

Vehicles with Gasoline Engine

– Remove the front exhaust pipe from the turbocharger (-arrow-). Refer to ⇒ Rep. Gr. 26 .

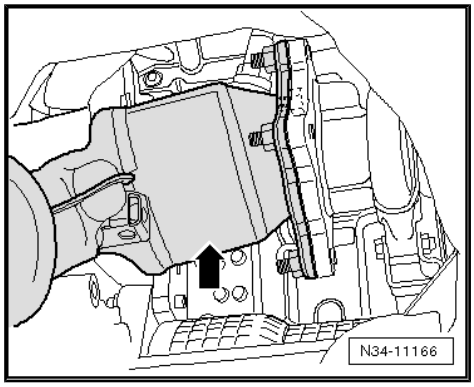

Vehicles with Diesel Engines

– Remove the exhaust system bracket from the subframe -arrows-. Refer to ⇒ Rep. Gr. 26 .

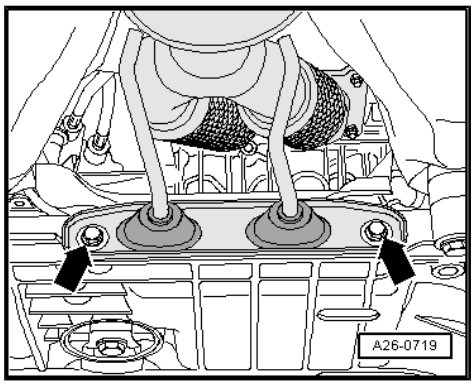

– Disconnect the exhaust system at the double clamp -arrows-.

– Tie up the front exhaust pipe or lay it on the tunnel brace.

All Vehicles

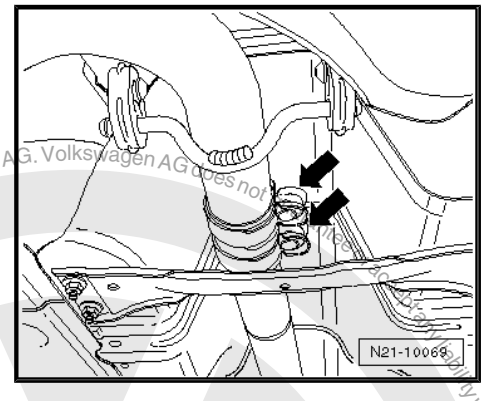

– Remove the pendulum support.

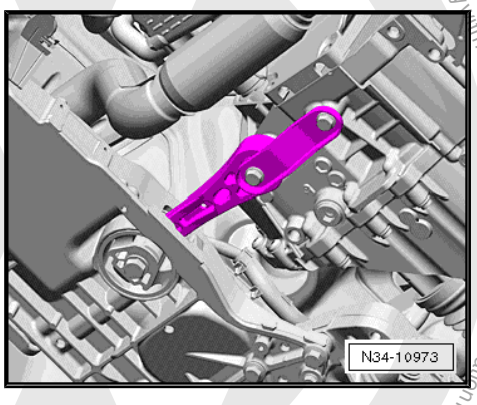

Protected by copyright. Copyright for private or commercial purposes, in part or in whole, is not permitted unless authorised by Volkswagen AG. Volkswagen AG does not guarantee or accept any liability with respect to the correctness of information in this document. Copyright by Volkswagen AG.

– Disconnect the connector -1- from the Oil Level Thermal Sensor - G266- .

– Remove left coupling rod from stabilizer bar and set off to the side. Refer to ⇒ Suspension, Wheels, Steering; Rep. Gr. 40 .

– Remove the left drive axle. Refer to ⇒ Suspension, Wheels, Steering; Rep. Gr. 40 ; Drive Axles, Removing and Installing .

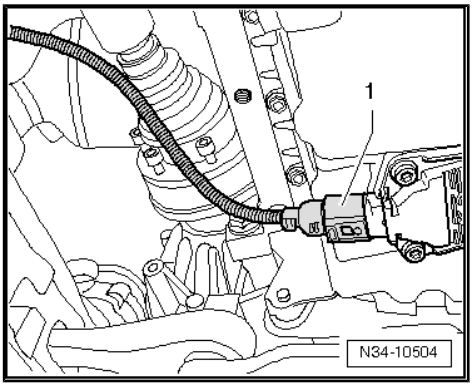

– If equipped remove the drive axle heat shield -arrows-. Refer to ⇒ Suspension, Wheels, Steering; Rep. Gr. 40 ; Drive Axles, Overview and Servicing; Drive Axle Heat Shield .

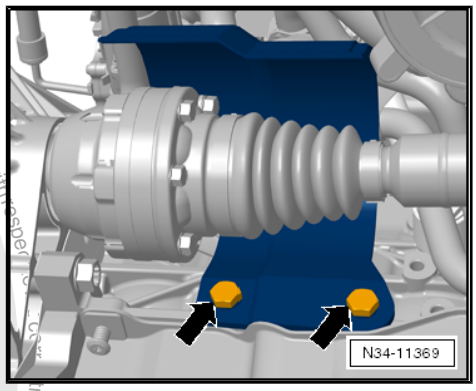

– Remove the right drive axle from the transmission and tie it up. Refer to ⇒ Suspension, Wheels, Steering; Rep. Gr. 40 ; Drive Axles, Removing and Installing .

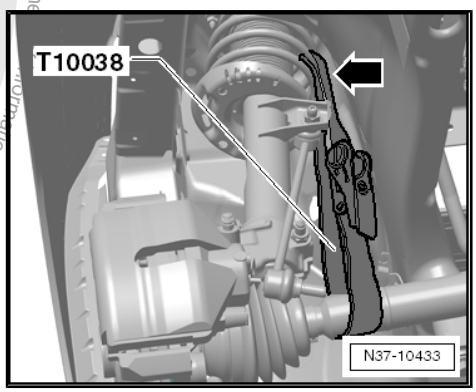

– Remove the hex collar bolts -arrows- on the left subframe mount -2- from the left bracket -1-.

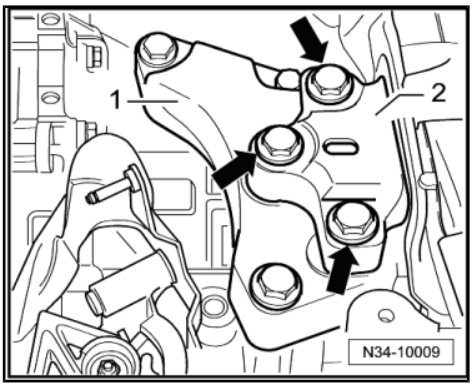

Protected by copyright. Copying for private or commercial purposes, in part or in whole, is not permitted unless authorised by Volkswagen AG. Volkswagen AG does not guarantee or accept any liability with respect to the correctness of information in this document. Copyright by Volkswagen AG.

– Lower the engine/transmission approximately 40 mm to dimension -a- using the spindles on the Engine Support Bridge - 10-222A- .

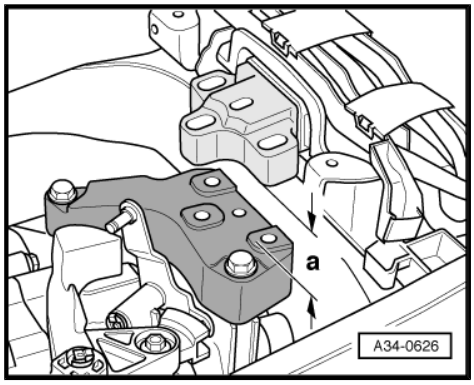

Note

When moving the engine/transmission assembly, pay attention to the connection lines, hoses and radiator.

– Remove the bracket -1- from the transmission -arrows-.

– Remove the relay lever with the cable retainer. Refer to ⇒ “1.8 Plastic Relay Lever”, page 89 .

– Remove the gearshift lever from the gearshift shaft.

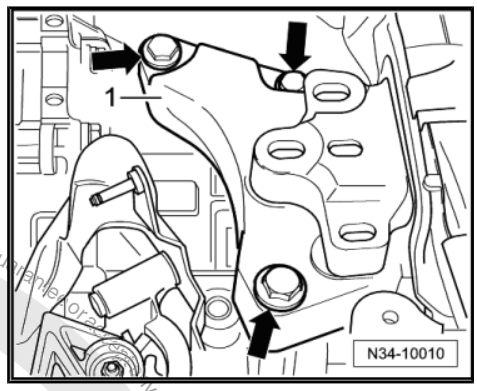

– Remove the small flywheel cover plate -A- -arrows-, if equipped.

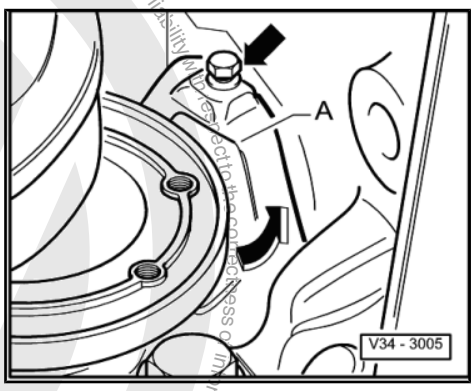

– Remove the lower engine/transmission connecting bolts -2-.

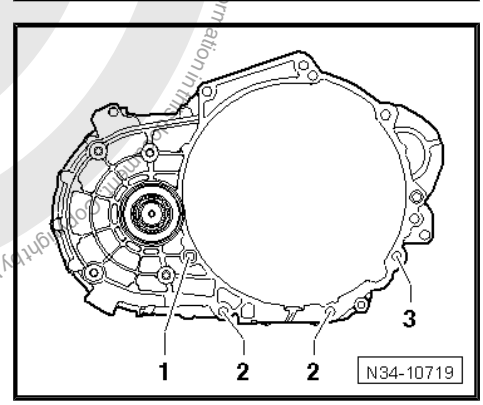

Note

Loosen the engine/transmission connecting bolts -1 and 3- and let them be hand-tight.

Protected by copyright. Copying for private or commercial purposes, in part or in whole, is not permitted unless authorised by Volkswagen AG. Volkswagen AG does not guarantee or accept any liability with respect to the correctness of information in this document. Copyright by Volkswagen AG.

Align the Transmission Support - 3282- with the Transmission Support - Mounting Plate 33 - 3282/33- in order to remove the “02Q” transmission.

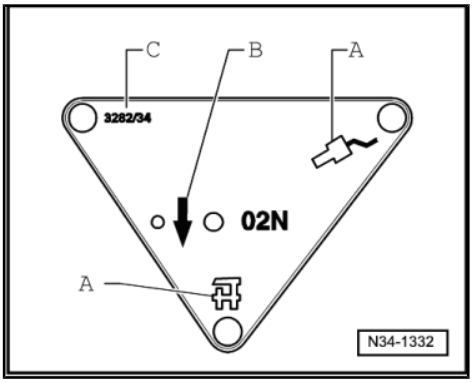

- Insert the Transmission Support - 3282- into the Engine and Gearbox Jack - VAS6931- .
- Align the arms of the Transmission Support - 3282- so that they match up with the holes in the Adjustment Plate .
- Install the Support Elements -A- as illustrated on the Adjustment Plate .
- Install the Transmission Support - Pins 29 - 3282/29- in place of the Mounting Element -C-.
- Position the Engine-Gearbox Jack - VAG1383 A- under the vehicle. The arrow symbol -B- on the Adjusting Plate points in direction of travel.
- Align the Adjusting Plate so that it is parallel to the transmission.

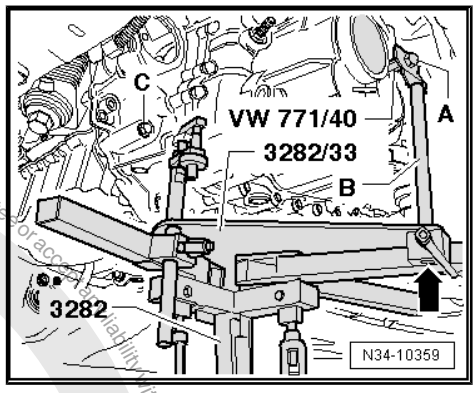

- Secure the Slide Hammer Set - Adapter 40 - VW771/40- inside the threaded hole in the transmission housing as shown.
- Install the Transmission Support - Pins 29 - 3282/29- into the hole on the transmission for the pendulum support bolt.
- Secure the transmission on the Transmission Support - 3282- with an M10 x 20 bolt -A-.

The drift -B- must be flush at the bottom with the guide on the Transmission Support - 3282- -arrow-.

- Remove the engine/transmission connecting bolt -C-.

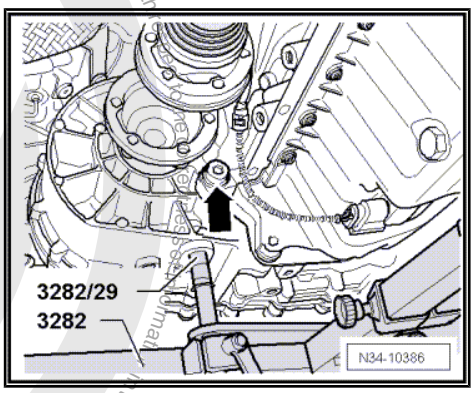

- Remove the last transmission to engine connecting bolt -arrow-.
- Separate the transmission from the engine (alignment sleeves).
- Move the transmission in the area of the differential with the spindles of the Transmission Support - 3282- into an angled position.
- The differential, near the transmission, must face upward.

The right flange shaft -1- must be guided over the bolting eyelet of the engine -2-.

- Carefully push the engine forward slightly with a second technician.

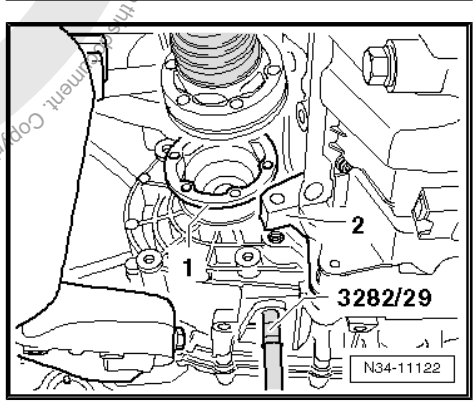

Protected by copyright. Copying for private or commercial purposes, in whole or in part, is not permitted unless authorised by Volkswagen AG. Volkswagen AG does not guarantee or accept any liability with respect to the correctness of information. Copyright by Volkswagen AG.

– Guide the transmission and the differential over the subframe -A- and swing it out.

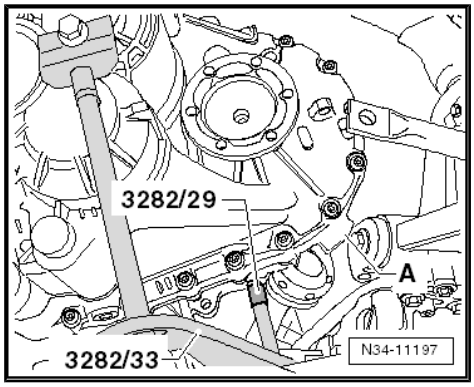

– Pay attention to the longitudinal member -arrows-. Then carefully lower the transmission.

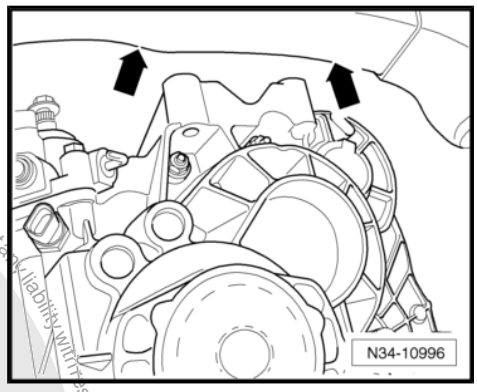

Note

Pay attention to all of the lines when lowering the transmission.

Installing

Note

- *Refer to "Transmission, Removing" to get a list of the special tools needed. Refer to*
  ⇒ "4.1 Transmission, Removing and Installing", page 145 .
- *Replace the self-locking nuts and bolts.*
- *Replace bolts that were tightened with an additional turn.*
- *Install any cable ties that were loosened or cut off during removal at their same location.*
- *Clean the input shaft splines and (on used clutch plates) the hub splines. Remove any corrosion and then apply a very thin coat of Grease for Clutch Disc Shaft Splines - G 000 100- on the splines. Then move the clutch plate back and forth on the input shaft until the hub moves freely on the shaft. Excess grease must be removed.*

– If the transmission is replaced, transfer the transmission shift lever and the relay lever.

– Clean any locking compound residue from all threaded holes using a tap.

– Check whether there are centering sleeves for the engine/ transmission in the cylinder block; install if necessary.

If the alignment sleeves are missing, it will be difficult to shift, there will be clutch problems and the transmission may make noises (loose rattling).

Protected by copyright. Copying for private or commercial purposes, in part or in whole, is not permitted unless authorised by Volkswagen AG. Volkswagen AG does not guarantee or accept any liability with respect to the correctness of information in this document. Copyright by Volkswagen AG.

– Make sure the intermediate plate is engaged on the sealing flange and pushed onto the alignment sleeves -arrows-.

– Check the release bearing for wear. Replace the clutch slave cylinder with release bearing if necessary. Refer to ⇒ “2.2 Clutch Slave Cylinder with Release Bearing, Removing and Installing”, page 52 .

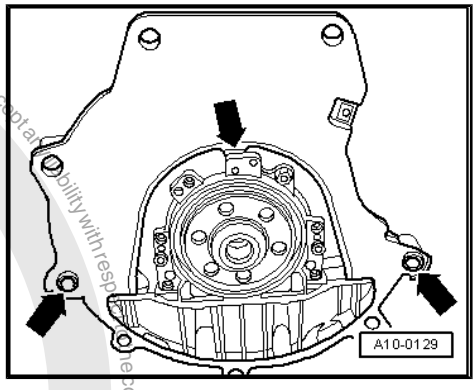

Align the Transmission Support - 3282- with the Transmission Support - Mounting Plate 33 - 3282/33- in order to install the “02Q” transmission.

– Align the arms of the Transmission Support - 3282- so that they match up with the holes in the Adjustment Plate .

– Install the Support Elements -A- as illustrated on the Adjustment Plate .

– Install the Transmission Support - Pins 29 - 3282/29- in place of the Mounting Element -C-.

– Place the transmission on the Engine and Gearbox Jack - VAS6931- .

– Align the Adjustment Plate so that it is parallel to the transmission.

– Install the Transmission Support - Pins 29 - 3282/29- into the hole on the transmission for the pendulum support bolt.

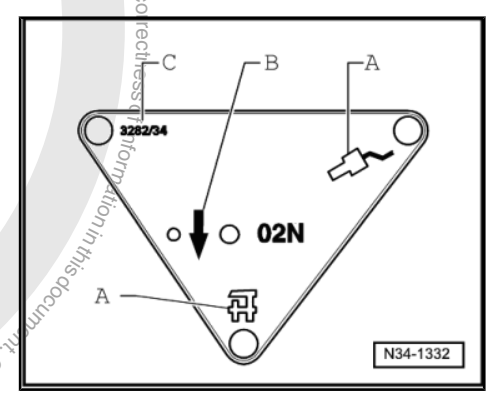

– Secure the Slide Hammer Set - Adapter 40 - VW771/40- inside the threaded hole in the transmission housing as shown.

– Secure the transmission on the Transmission Support - 3282- with an M10 x 20 bolt -A-.

The drift -B- must be flush at the bottom with the guide on the Transmission Support - 3282- -arrow-.

– Position the Engine and Gearbox Jack - VAS6931- under the vehicle. The arrow on the adjusting plate points in direction of travel.

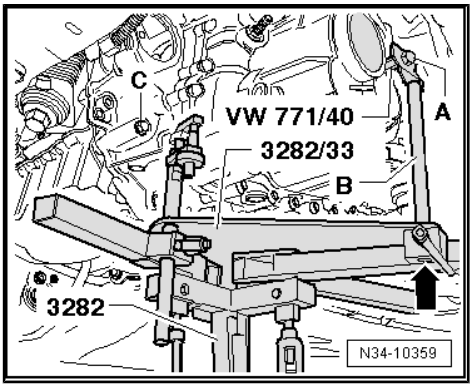

Note

Pay attention to all of the lines when installing the transmission.

– Lift the transmission carefully.

– Carefully push the engine forward slightly with a second technician.

Volkswagen AG. Volkswagen AG does not guarantee or accept any liability with respect to the correctness of information in this document. Copyright by Volkswagen AG. Protected by copyright. Copying for private or commercial purposes, in part or in whole, is not permitted unless authorised by Volkswagen AG.

– Now turn the transmission upward in the area of the differential and downward in the area of the 6th gear via the spindles of the Transmission Support - 3282- .

– Guide the transmission and differential -A- over the subframe.

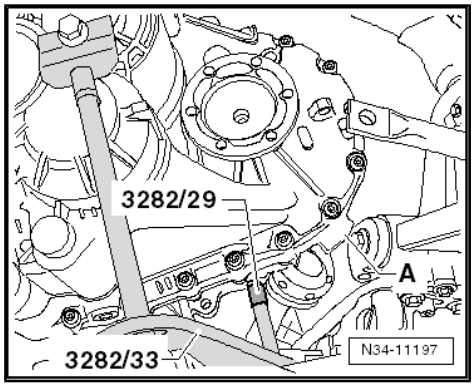

• The right flange shaft must be guided past the flywheel -arrow 2-; pay attention to the intermediate plate -arrow 1-.

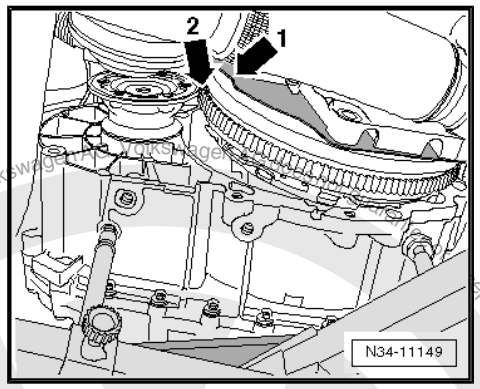

– The right flange shaft -1- must be guided over the bolting eyelet of the engine -2-.

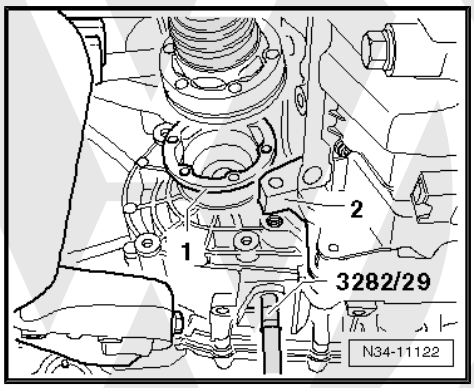

– At the same time, change the position of the transmission using the spindles of the Transmission Support - 3282- so that it does not come into contact with the longitudinal member -arrows-.

– Turn the transmission to its installed position using the spindles of the Transmission Support - 3282- .

– Align the transmission to the engine (alignment sleeves) and insert it.

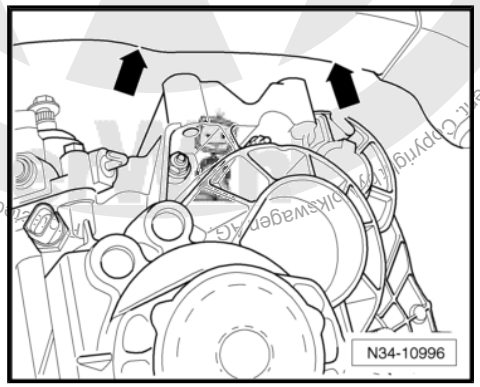

> ⚠ **Caution**
>
> ♦ ***Brake fluid can escape from the bleeder on the transmission.***

Copyright by Volkswagen AG. Volkswagen AG does not accept any liability with respect to the correctness of information in this document. Copyright by Volkswagen AG. Copying for private or commercial purposes, in part or in whole, is not permitted unless authorised by Volkswagen AG.

– Insert engine/transmission bolt -C- and tighten to tightening specification. Refer to
⇒ “4.2 Tightening Specifications”, page 164 .

– Install lower engine/transmission connecting bolts and tighten to tightening specification. Refer to
⇒ “4.2 Tightening Specifications”, page 164 .

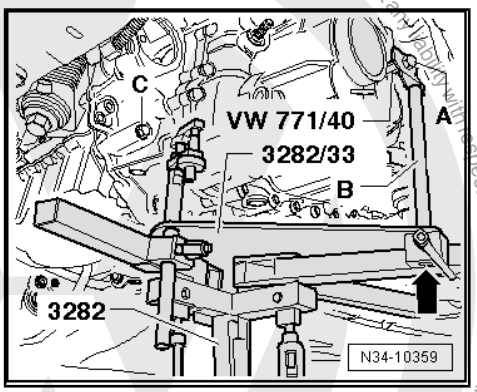

– Install the engine/transmission connecting bolt -arrow- and tighten it to the tightening specification. Refer to
⇒ “4.2 Tightening Specifications”, page 164 .

– After transmission is bolted to engine at bottom, remove the Transmission Support - 3282- from transmission.

– Install the upper engine/transmission connecting bolts and tighten them to the tightening specification. Refer to
⇒ “4.2 Tightening Specifications”, page 164 .

– Attach the transmission gearshift lever to the gearshift shaft. Refer to
⇒ Fig. ““Installing the Transmission Shift Lever”“ , page 88 and tighten the nut to tightening specification -item 17-
⇒ Item 17 (page 87) .

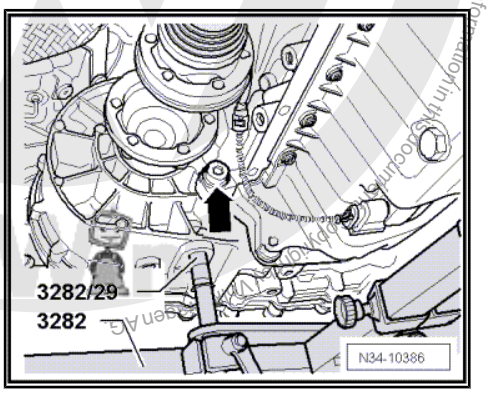

– Install the relay lever with the cable retainer. Refer to
⇒ “1.8 Plastic Relay Lever”, page 89 .

– Attach the bracket -1- with the new hex bolts to the transmission -arrows- and tighten them to the tightening specification. Refer to ⇒ “4.2 Tightening Specifications”, page 164 .

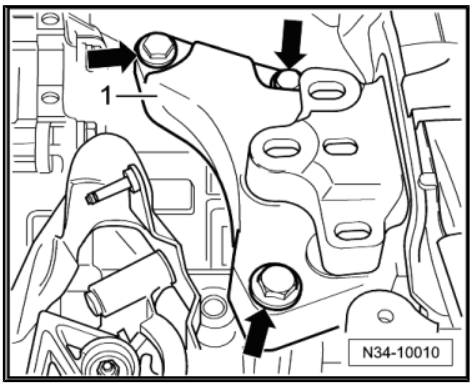

Protected by copyright. Copyright by Volkswagen AG. Volkswagen AG does not guarantee or accept any liability with respect to the correctness of information in this document. Copyright by Volkswagen AG. Reproduction and distribution, in whole or in part, is not permitted unless authorised by Volkswagen AG for commercial purposes, in part or in whole.

– Align the engine/transmission in its installed position. Lift it until the bracket -1- is in complete contact with the left subframe mount -2-.

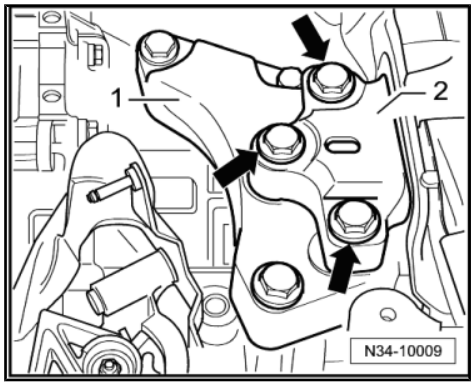

Caution

There is a risk of damaging the threads in transmission bracket by inserting bolts at an angle.

- *Before installing bolts -arrows-, transmission bracket and transmission mount support arm must be absolutely parallel to each other. If necessary, lift the back of the transmission using the Engine and Gearbox Jack - VAS6931- .*

Note

Install the engine/transmission mount free of tension. Refer to ⇒ Rep. Gr. 10 .

– Install the new hex bolts -arrows- of the left subframe mount -2- in the bracket -1- and tighten to the tightening position. Refer to ⇒ “4.2 Tightening Specifications”, page 164 .

WARNING

Only remove the Engine Support Bridge - 10-222A- when all subframe mount bolts are tightened to the tightening specification.

– Install the flywheel cover plate -A- (if equipped) -arrows-. Refer to ⇒ “4.2 Tightening Specifications”, page 164 .

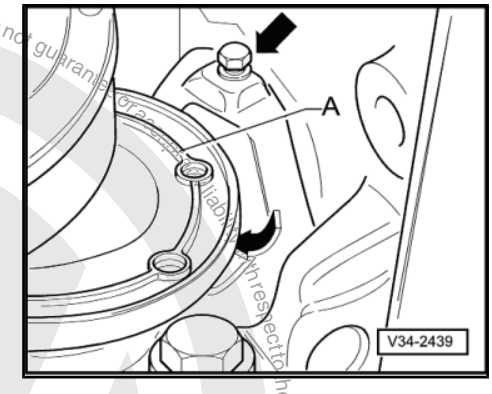

Note

- *There are threaded inserts (for example “Heli Coil”) in the pendulum support fastening holes.*
- *Characteristic: there is a collar on the first thread -arrow-.*
- *Pay attention to the corresponding bolts and tightening specifications. Refer to ⇒ Suspension, Wheels, Steering; Rep. Gr. 40 ; Subframe; Overview - Subframe .*

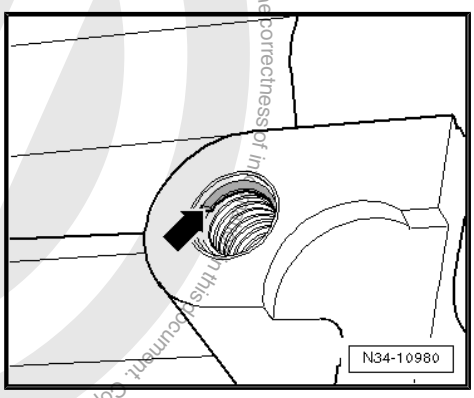

Protected by copyright. Copying for private or commercial purposes, in part or in whole, is not permitted unless authorised by Volkswagen AG. Volkswagen AG does not guarantee or assume any liability with respect to the correctness of information in this document. Copyright by Volkswagen AG.

– Install the pendulum support. Refer to ⇒ Suspension, Wheels, Steering; Rep. Gr. 40 ; Subframe; Overview - Subframe .

– Install the drive axles. Refer to ⇒ Suspension, Wheels, Steering; Rep. Gr. 40 ; Drive Axles, Removing and Installing .

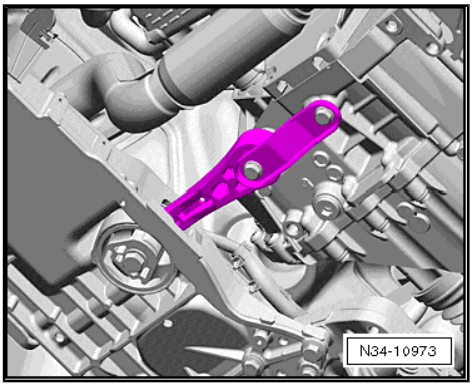

– If equipped install the drive axle heat shield -arrows-. Refer to ⇒ Suspension, Wheels, Steering; Rep. Gr. 40 ; Drive Axles, Overview and Servicing; Drive Axle Heat Shield .

– Attach the left coupling rod. Refer to ⇒ Suspension, Wheels, Steering; Rep. Gr. 40 .

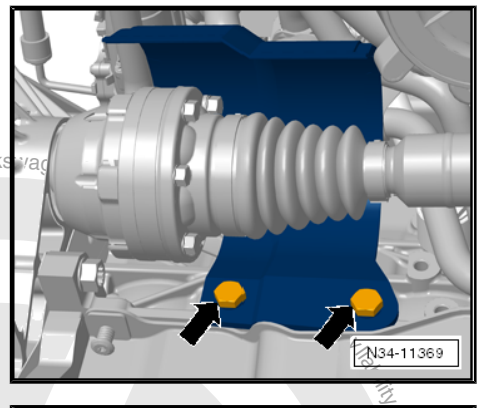

– Connect the connector -1- to the Oil Level Thermal Sensor -G266- .

– Assemble the exhaust system and attach the exhaust system bracket to the subframe. Refer to ⇒ Rep. Gr. 26 .

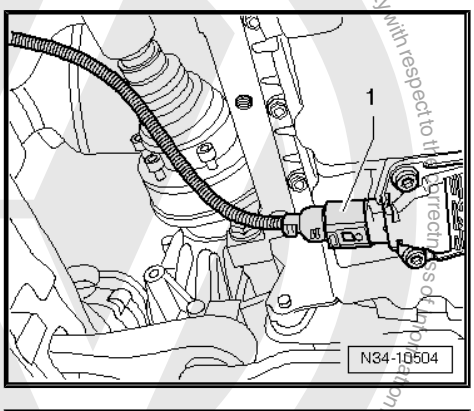

– Install the air shroud -arrow- and the radiator fans. Refer to ⇒ Rep. Gr. 19

– Attach the charge air pipe to the engine. Refer to ⇒ Rep. Gr. 21 .

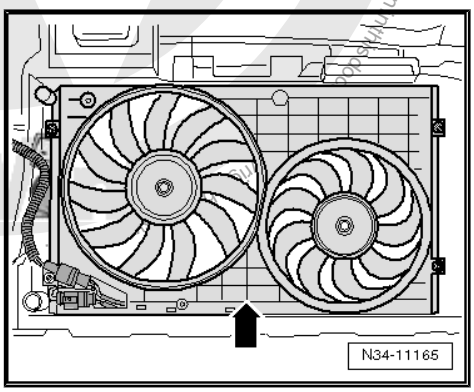

Protected by copyright. Copying for private or commercial purposes, in part or whole, is not permitted unless authorised by Volkswagen AG. Volkswagen AG does not guarantee or accept any liability with respect to the correctness of information in this document.

– Install the left charge air hose -arrow 1- and -arrow 2- ⇒ Rep. Gr. 21 .

– Install the right charge air hose to the charge air cooler. Refer to ⇒ Rep. Gr. 21 .

– Position the starter and install the lower bolt. Refer to ⇒ Electrical Equipment; Rep. Gr. 27 ; Starter; Starter, Removing and Installing .

– Attach the bracket for the lines to the lower starter bolt.

– Install the starter bolt and then connect the connector and wires to the starter. Refer to ⇒ Electrical Equipment; Rep. Gr. 27 ; Starter; Starter, Removing and Installing .

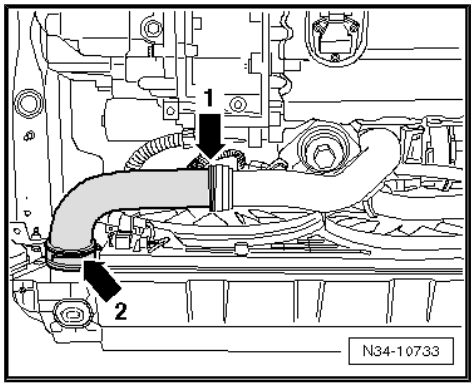

– Attach the ground cable -1- to the top starter bolt.

– Connect the connector -2- to the Back-Up Lamp Switch - F4- .

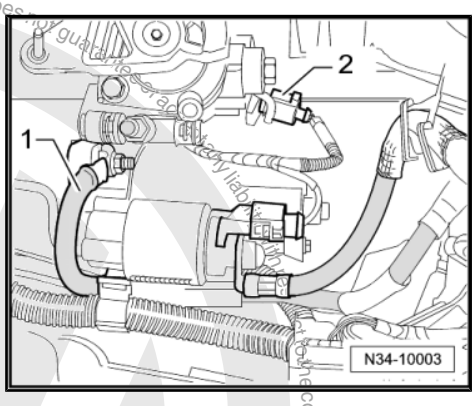

– Transmission on vehicles with Start/Stop System: connect the connector -arrow- to the Transmission Neutral Position Sensor - G701- .

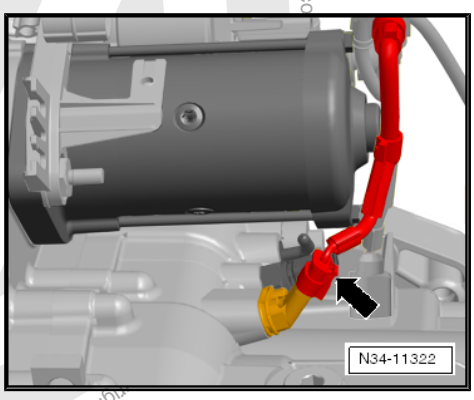

– Push the hose/line assembly or pipe -A- into the bleeder/clutch slave cylinder to the stop and push the clamp -arrow- downward.

– Pull on the line to make sure it is secure.

– Remove the Hose Clamps - Up To 25mm - 3094- from the hose/line assembly or from the supply hose.

– After removing the Hose Clamps - Up To 25mm - 3094- , bring the return hose back to its original shape.

– Bleed the clutch mechanism. Refer to
⇒ “1.10 Clutch Mechanism, Bleeding”, page 48 .

– Make sure the vacuum hose for the brake system is installed correctly. Refer to ⇒ Brake System; Rep. Gr. 47 ; Hydraulic System .

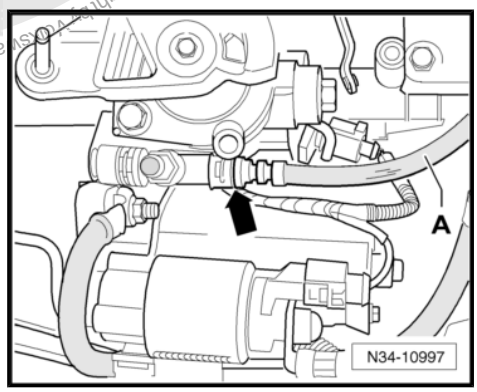

Copyright. Copying for private or commercial purposes, in part or in whole, is not permitted unless authorised by Volkswagen AG. Volkswagen AG does not guarantee or accept any liability with respect to the correctness and completeness of this document.

– Attach the cable mounting bracket to the transmission and tighten the bolts and nuts -arrows- to the tightening specification -item 6- ⇒ Item 6 (page 86) and -item 10- ⇒ Item 10 (page 86) .

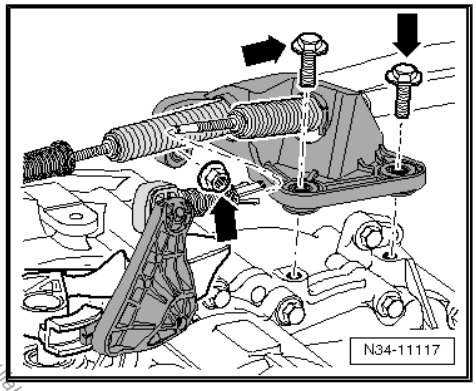

– Insert the selector cable into the cable retainer.

– Apply a small amount of grease to the pin -arrow- on the gearshift lever -2-.

Refer to the Parts Catalog for the grease allocation.

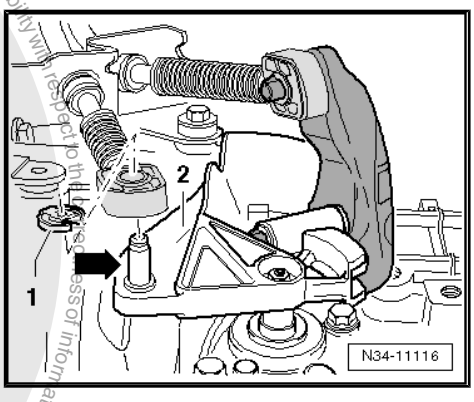

– Replace the lock washer -1- after every disassembly.

– Adjust the gearshift mechanism. Refer to ⇒ “1.11 Selector Mechanism, Adjusting”, page 97 .

– Install the plenum chamber cover. Refer to ⇒ Body Exterior; Rep. Gr. 50 ; Plenum Chamber Cover; Plenum Chamber Cover, Removing and Installing .

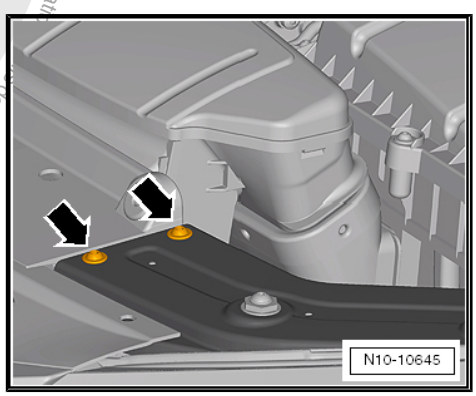

– Install the bolts -arrows- for the left and right lock carrier retaining brackets to the tightening specification. Refer to ⇒ Body Exterior; Rep. Gr. 50 ; Lock Carrier; Lock Carrier - Attachments .

– Install the battery tray and the battery. Refer to ⇒ Electrical Equipment; Rep. Gr. 27 ; Battery; Battery, Removing and Installing .

– Install the air filter. Refer to ⇒ Rep. Gr. 23 ; Diesel Direct Injection System; Air Filter Housing, Removing and Installing or ⇒ Rep. Gr. 24 ; Air Filter; Air Filter Housing, Removing and Installing .

– Install the engine cover. Refer to ⇒ Rep. Gr. 15 ; Cylinder Head; Engine Cover, Removing and Installing .

– Connect the battery and observe procedure after connecting battery. Refer to ⇒ Electrical Equipment; Rep. Gr. 27 ; Battery; Battery, Disconnecting and Connecting .

– Check the transmission fluid level. Refer to ⇒ “8 Transmission Fluid, Checking”, page 192 .

– Install the left front housing liner. Refer to ⇒ Body Exterior; Rep. Gr. 66 ; Wheel Housing Liner; Front Wheel Housing Liner, Removing and Installing .

– Install the noise insulation. Refer to ⇒ Body Exterior; Rep. Gr. 50 ; Noise Insulation .

– Install the wheel. Refer to ⇒ Suspension, Wheels, Steering; Rep. Gr. 44 ; Wheel Installation Tightening Specifications .

Protected by copyright. Copying for private or commercial purposes in part or in whole is not permitted unless authorised by Volkswagen AG. Volkswagen AG does not guarantee or accept any liability with respect to the usefulness of information in this document. Copyright by Volkswagen AG.

4.2 Tightening Specifications

Transmission to Engine (Engine Flange Face)

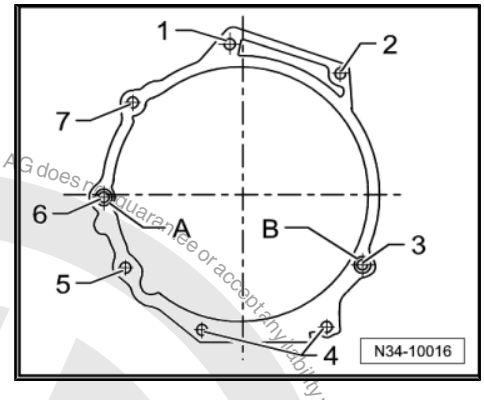

Item	Bolt	Quantity	Nm
1	M12 x 55 ♦ With a short threaded pin M8 or M12 x 50 ♦ Without threaded pin	1	80
2	M12 x 55 ♦ With a long threaded pin M8	1	80
3	M12 x 70 or M12 x 65	1	80
4	M10 x 50	2	40
5	M10 x 105	1	40
6	M12 x 165 ♦ With a short M8 threaded pin ♦ Also starter to transmission	1	80
7	M12 x 165 ♦ With a short M8 threaded pin ♦ Also starter to transmission	1	80
-	M6 x 8 ♦ Small flywheel cover plate (not present on all engines)	1	10

-A-: Centering alignment sleeves

Protected by copyright. Copying for private or commercial purposes, in part or in whole, is not permitted unless authorised by Volkswagen AG. Volkswagen AG does not guarantee or accept any liability with respect to the correctness of information in this document. Copyright by Volkswagen AG.

Transmission Bracket -1- to Transmission.

– Replace the bolts.

Tighten the bolts -arrows-: 60 Nm + 90°.

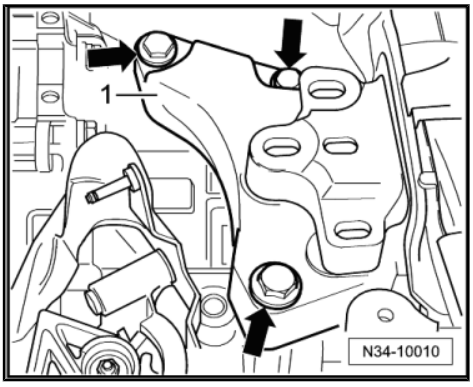

Transmission to Body

– Replace the bolts.

Tighten the bolts -arrows-: 60 Nm + 90°.

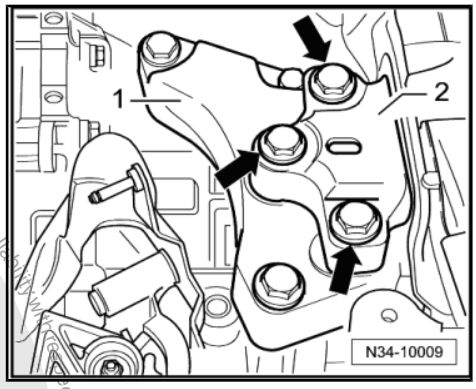

Note

Install the engine/transmission mount free of tension. Refer to ⇒ Rep. Gr. 10 ; Engine, Removing and Installing .

Protected by copyright. Copying for private or commercial purposes, in part or in whole, is not permitted unless authorised by Volkswagen AG. Volkswagen AG does not guarantee or accept any liability with respect to the correctness of information in this document. Copyright by Volkswagen AG.

5 Transmission, Removing and Installing, Jetta from MY 2005 , Golf Wagon from MY 2007 and Golf Wagon from MY 2010, Vehicles with AWD

⇒ “5.1 Transmission, TDI, Removing and Installing”, page 166

5.1 Transmission, TDI, Removing and Installing

⇒ “5.1.1 Transmission, Removing”, page 167

⇒ “5.1.2 Transmission, Installing”, page 178

⇒ “5.1.3 Tightening Specifications”, page 186

Special tools and workshop equipment required

- Engine Support Bridge - 10-222A-
- Engine Support Bridge - Engine Support Feet - 10-222A/8-
- Engine Support Bridge - Engine Support 3 - 10-222A/3-
- Engine Support Bridge - Engine Support 18 - 10-222A/18-
- Transmission Support - 3282-
- Support Elements for transmission (determine when mounting the Mounting Plate on the Transmission Support)
- Transmission Support - Mounting Plate 33 - 3282/33-
- Transmission Support Jig - 3336- to transport the transmission
- Torque Wrench 1331 5-50Nm - VAG1331-
- Torque Wrench 1332 40-200Nm - VAG1332-
- Engine and Gearbox Jack - VAS6931-
- Slide Hammer Set - Adapter 40 - VW771/40-
- Hose Clamps - Up To 25mm - 3094-
- Engine Support Bridge - Gearbox Bracket - T10346-
- Grease for Clutch Disc Shaft Splines - G 000 100-
- Allocate the grease for gearshift mechanism. Refer to the Parts Catalog.
- M6 x 80 collar bolt
- M10 x 20 hex bolt

The Engine Support Bridge - 10-222A- and the Engine Support Bridge - Engine Support Feet - 10-222A/8- will be mounted on the longitudinal members later in the procedure.

Copyright by Volkswagen AG. Volkswagen AG does not guarantee or accept any liability with respect to the correctness of information in this document. Copyright by Volkswagen AG. Reproduced by courtesy of Volkswagen AG. Quoting of parts in part only permitted unless authorised by Volkswagen AG.

- To protect the edges of the fender, cover both Engine Support Bridge - Engine Support Feet - 10-222A/8- with cloth tape -arrow-. Refer to the Parts Catalog (Chemical Materials).

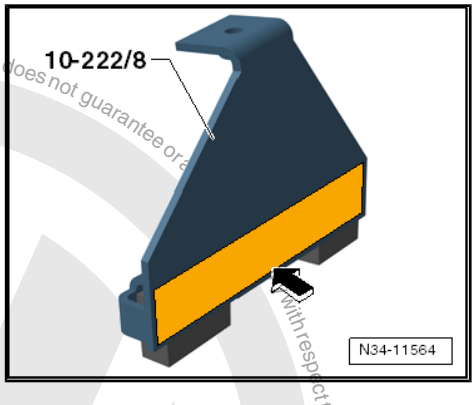

5.1.1 Transmission, Removing

– First check whether a coded radio is installed. If so, obtain the anti-theft code.

– Disconnect the battery ground cable. Refer to ⇒ Electrical Equipment; Rep. Gr. 27 ; Battery; Battery, Disconnecting and Connecting .

Later in the procedure, the Engine Support Bridge - 10-222A- is connected to the engine lifting eyes.

– Remove the engine cover if it is blocking the lifting eyes.

– Remove the air filter housing if it is located near the battery. Refer to ⇒ Rep. Gr. 23 ; Diesel Direct Injection System; Air Filter Housing, Removing and Installing or ⇒ Rep. Gr. 24 ; Air Filter; Air Filter Housing, Removing and Installing .

– Remove the battery and the battery tray. Refer to ⇒ Electrical Equipment; Rep. Gr. 27 ; Battery; Battery, Removing and Installing .

– Remove the lines -A- out from the bracket -B-.

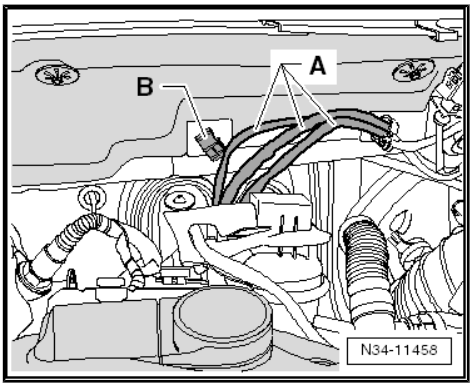

– Remove the shift cable lock washer -3- from the transmission shift lever -1- and remove the cable from the pin -arrow-.

Metal Relay Lever

– Remove the selector cable lock washer -4- from the relay lever -2- and remove the cable from the pin -arrow-.

Plastic Relay Lever

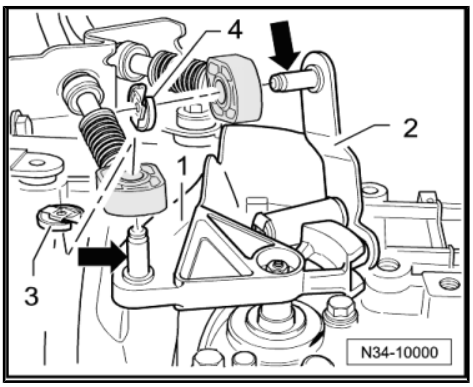

– Remove the cable retainer from the selector cable.

• To avoid damage to the selector cable, the cable retainer must be disconnected from the selector lever before removal.

– Pull the securing mechanism all the way forward in direction of -arrow 1- and then unlock to the left in direction of -arrow 2-.

– Press the relay lever forward (in the direction of -arrow 3-).

– The plastic relay lever is removed together with the cable retainer later in the procedure.

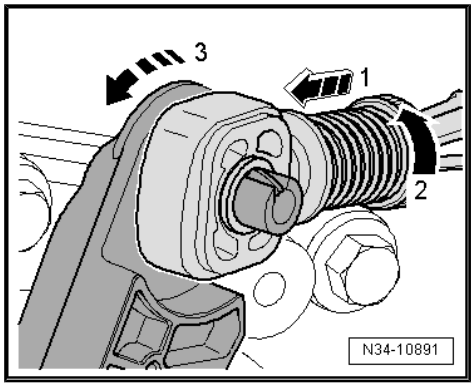

Continuation for All

– Remove the cable bracket from the transmission -arrows-, tie up to the side.

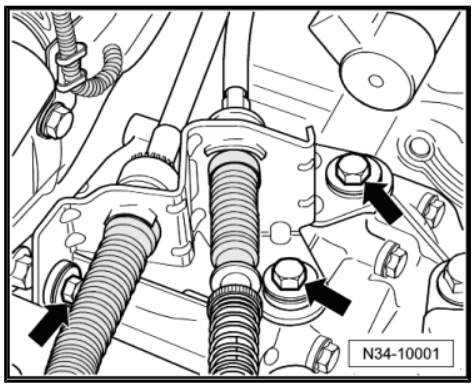

– If equipped, remove the bleeder tube from the bevel gear -arrow-.

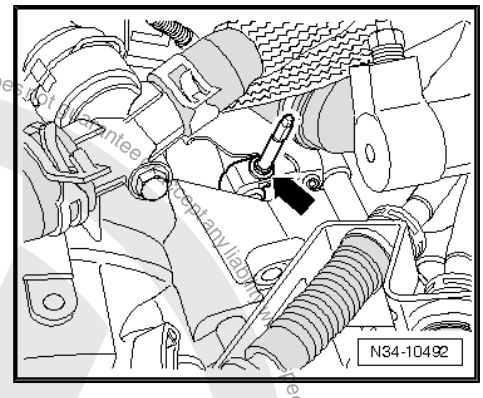

Vehicles with A Pipe between the Clutch Master and Slave Cylinders

– Clamp the clutch master cylinder hose using a Hose Clamps - Up To 25mm - 3094- .

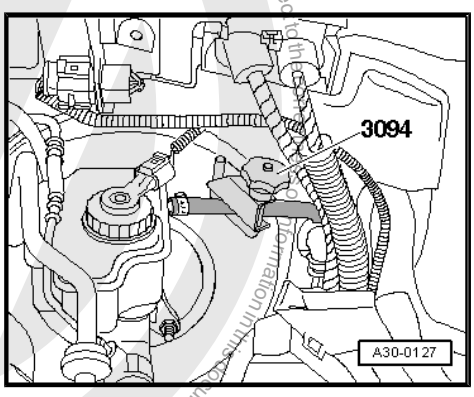

Protected by copyright. Copying for private or commercial purposes, in part or on whole, is not permitted unless authorised by Volkswagen AG. Volkswagen AG does not guarantee or accept any liability with respect to the correctness of information in this document. Copyright by Volkswagen AG.

Vehicles with A Hose/Line Assembly between the Clutch Master and Slave Cylinders

– Clamp off the hose on the hose/line assembly -A- to the clutch slave cylinder using the Hose Clamps - Up To 25mm - 3094- .

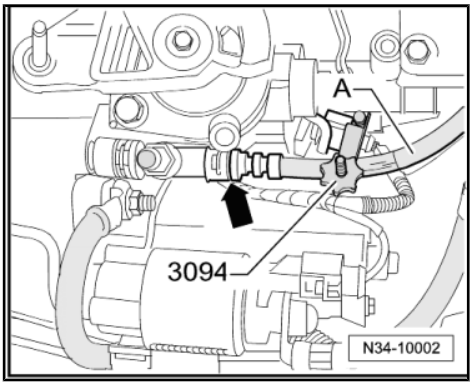

Continuation for All

– Pull the clamp -arrow- for the hose/line assembly or the pipe out all the way to the stop.

– Remove the hose/line assembly or pipe from the bleeder/ clutch slave cylinder and seal it off.

> ⚠ **Caution**
>
> *Do not press the clutch pedal anymore.*

– Remove the ground cable -1- from the top starter bolt.

– Disconnect the connector -2- from the Back-Up Lamp Switch - F4- .

– Disconnect the connector and the wire from the starter.

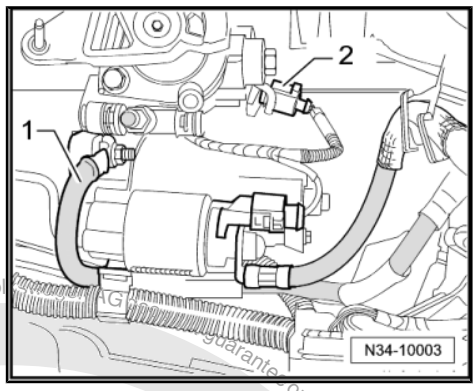

– Remove the upper engine/transmission connecting bolts -arrows-.

– Remove the upper bolt from the starter.

– If there are hose and cable connections located near the engine lifting eyes for the Engine Support Bridge - 10-222A- , these must now be removed.

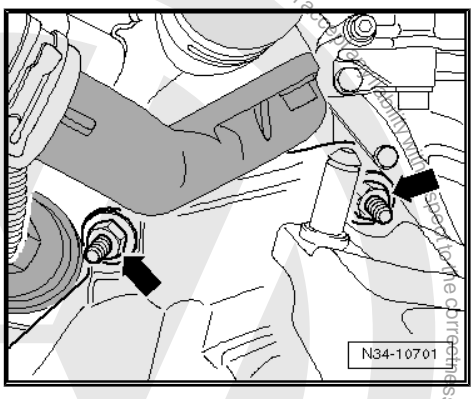

– Install the Engine Support Bridge - Gearbox Bracket - T10346- in the most rear hole out of the three holes in the battery tray.

– Use a collar bolt M6 x 80 or one of the battery tray bolts for this.

– If there are hose and cable connections located near the engine lifting eyes for the Engine Support Bridge - 10-222A- , these must now be removed.

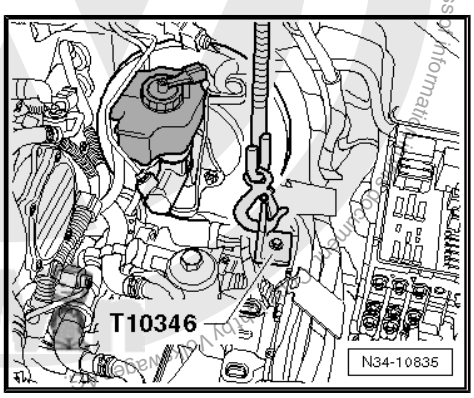

– Position the Engine Support Bridge - 10-222A- in front of the hood support.

Protected by copyright. Copying for private or commercial purposes, in part or in whole, is not permitted unless authorised by Volkswagen AG. Volkswagen AG does not guarantee or accept any liability with respect to the correctness of information

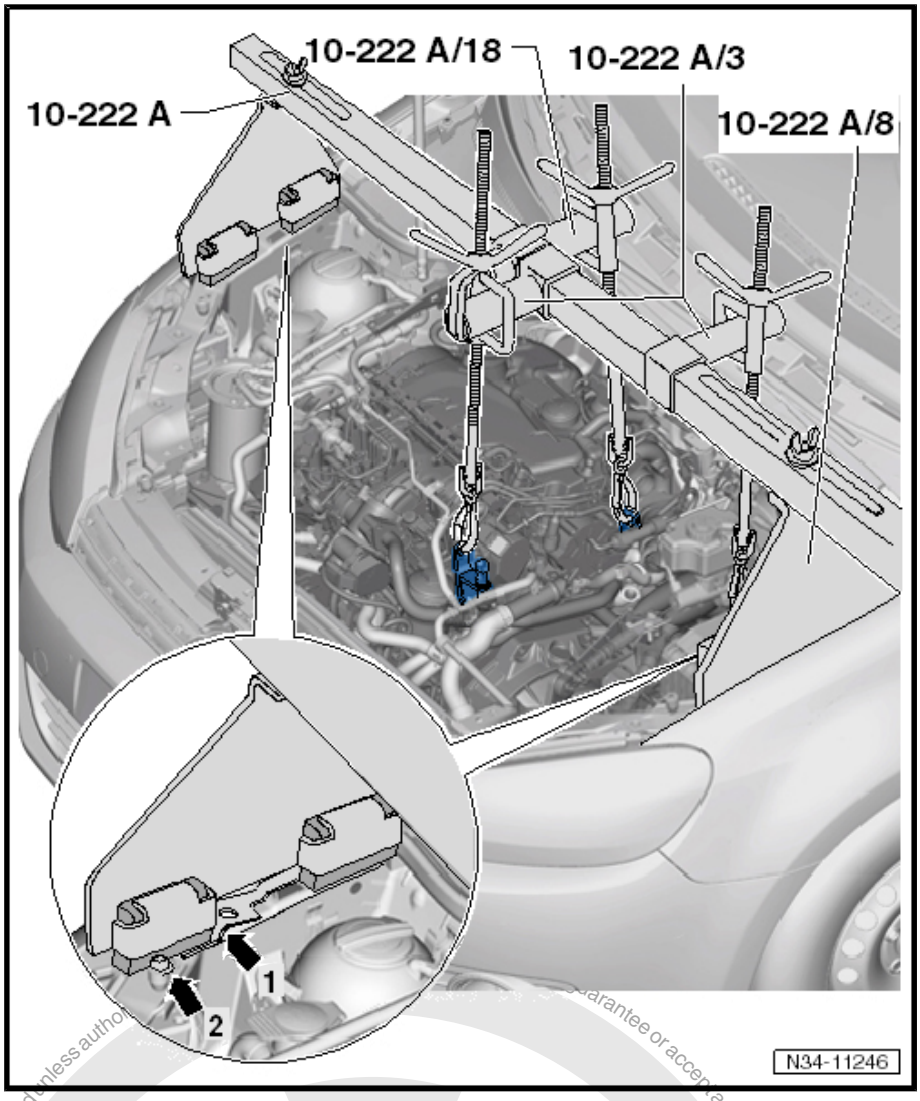

- Use:
- Position the Engine Support Bridge - Engine Support Feet - 10-222A/8- :
- Then connect the Engine Support Bridge - Gearbox Bracket - T10346- to the Engine Support Bridge - 10-222A- .
- Hook the Spindles into the left lifting eye on the engine.
- Pretension the engine/transmission assembly and Engine Support Bridge - 10-222A- via the spindles.
- Loosen left and right front wheel bolts.
- Raise the vehicle.
- Remove the front wheels.
- Remove the lower part of the left front wheel housing liner. Refer to ⇒ Body Exterior; Rep. Gr. 66 ; Wheel Housing Liner .
- Remove the noise insulation. Refer to ⇒ Body Exterior; Rep. Gr. 50 ; Noise Insulation .

Protected by copyright. Copyright by Volkswagen AG.

– Transmission on vehicles with Start/Stop System: disconnect the connector -arrow- from the Transmission Neutral Position Sensor - G701- .

– Remove the bracket from the starter.

– Remove the starter. Refer to ⇒ Electrical Equipment; Rep. Gr. 27 ; Starter; Starter, Removing and Installing .

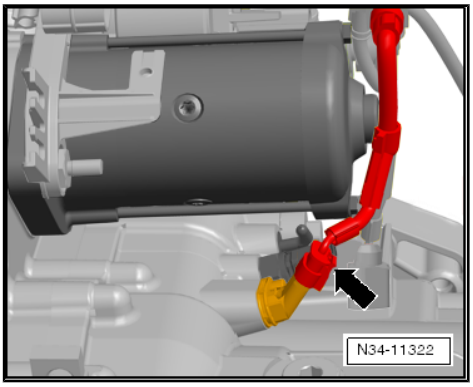

– Disconnect the connector -arrow 1- or -arrow 2- on the charge air hose. Refer to ⇒ Rep. Gr. 21 .

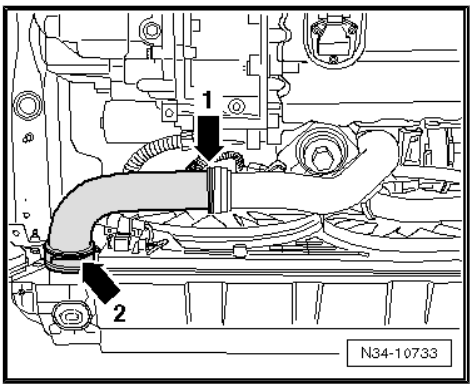

– Remove the exhaust system bracket from the subframe -arrows-.

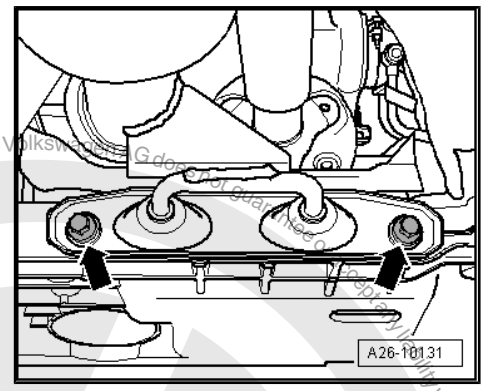

– Disconnect the exhaust system at the clamping sleeve -arrows-.

– Tie up the front exhaust pipe.

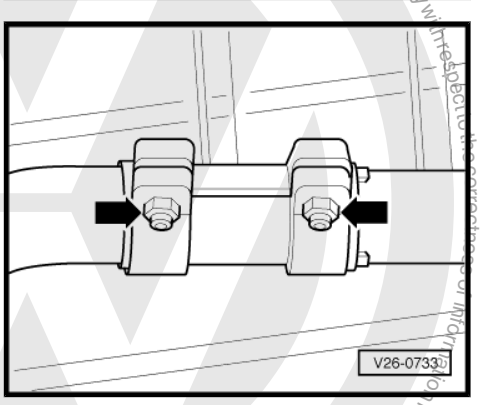

Protected by copyright. Copying for private or commercial purposes, in part or in whole, is not permitted unless authorised by Volkswagen AG. Volkswagen AG does not guarantee or accept any liability with respect to the correctness of information in this document. Copyright by Volkswagen AG.

– Mark the position of the driveshaft with the flexible disk to the bevel gear flange.

– Remove the driveshaft and flexible disk from the bevel gear flange shaft -arrows-.

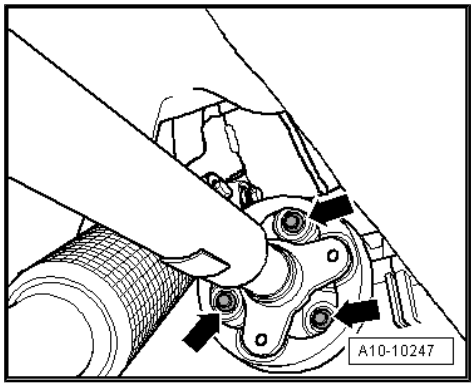

– Disconnect the connector -1- from the Oil Level Thermal Sensor - G266- .

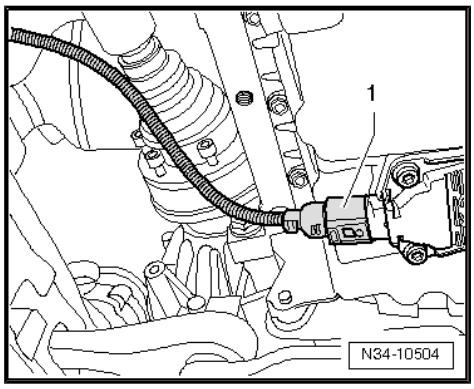

– Remove the pendulum support from the transmission.

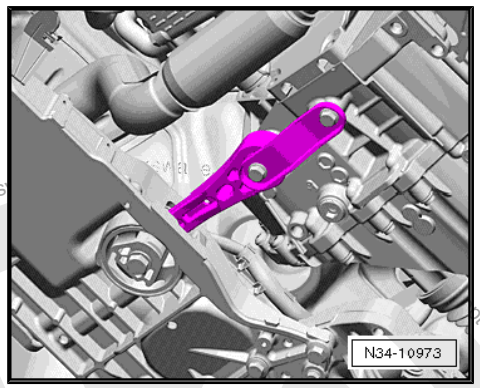

Note

After loosening the pendulum support bolts, the engine/transmission assembly swings forward slightly (toward the front end). Ensure that the sealing ring -arrow- in the flange of the driveshaft is not damaged during removal and installation.

– Press the engine/transmission assembly slightly forward (toward the front end) and pull the driveshaft off of the bevel gear.

– Lift the driveshaft and secure it.

– Remove the left and right coupling rods from the stabilizer bar.

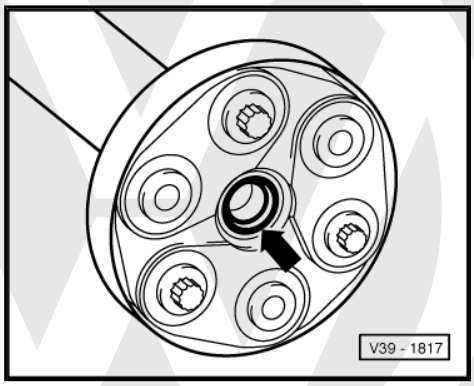

Protected by copyright. Copying for private or commercial purposes, in any whole, is not permitted unless authorised by Volks
Copyright by Volkswagen AG. No liability with respect to the correctness of information in this document.

– Remove the nuts -arrows- for the ball joint on the control arm.

– Secure the subframe before removing. Refer to ⇒ Suspension, Wheels, Steering; Rep. Gr. 40 ; Subframe; Subframe, Securing .

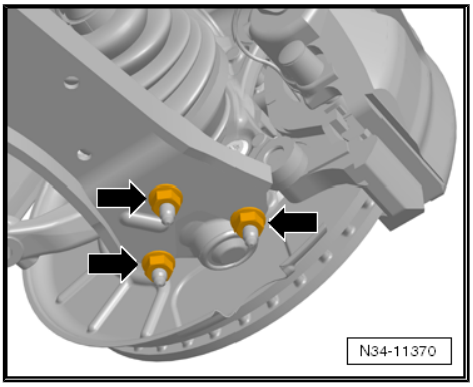

– Remove the subframe and pendulum support, the stabilizer bar, the mounts, the steering gear and control arms. Refer to ⇒ Suspension, Wheels, Steering; Rep. Gr. 40 ; Subframe; Overview - Subframe .

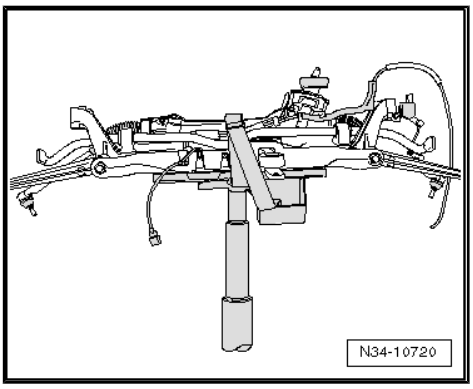

– Remove the drive axle heat shield from the bevel box -arrows-.

– Remove left and right drive axles from transmission flange shafts. Secure the drive axles. Do not damage the protective coating when doing this.

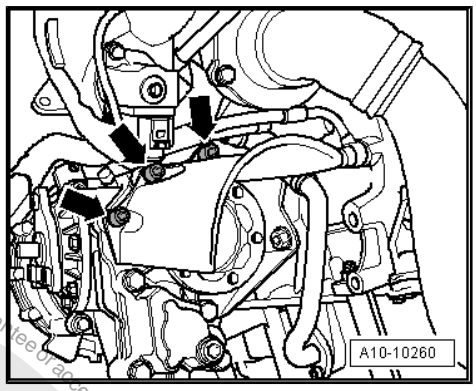

Vehicles without A Particulate Filter

– Remove the turbocharger oil return line -A- from the engine. Refer to ⇒ Rep. Gr. 21 .

– Remove the transmission mount bolts at the engine and bevel gear -arrows 1 and arrows 2-.

– Remove the transmission mount.

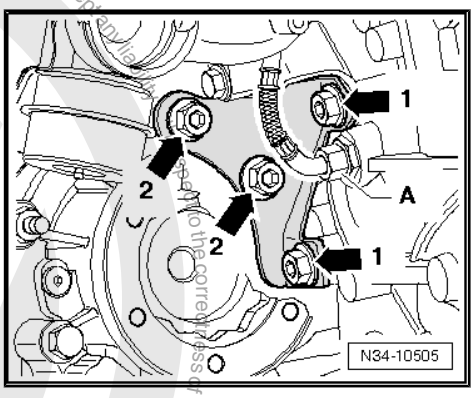

Protected by copyright. Copying for private or commercial purposes, in part or in whole, is not permitted unless authorised by Volkswagen AG. Volkswagen AG does not guarantee or accept any liability with respect to the correctness of information in this document. Copyright by Volkswagen AG.

– Remove the support -A-, if equipped. Refer to ⇒ Rep. Gr. 26 .

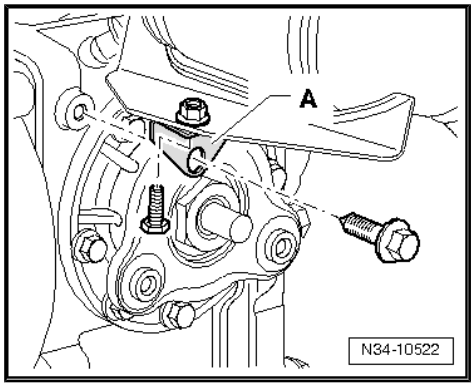

Vehicles with A Particulate Filter

– Remove the upper particulate filter -A- from the engine -arrow 1- and from under the turbocharger -arrow 2-. Refer to ⇒ Rep. Gr. 26 .

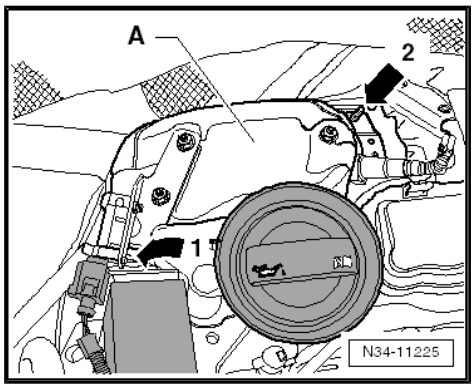

– Loosen the nuts -1- and remove the nuts -2- to remove the particulate filter bracket from the engine.

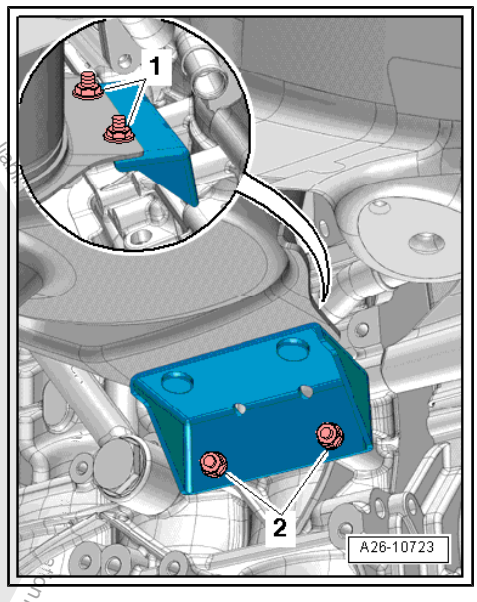

– Then tie the particulate filter to the plenum chamber bulkhead.

– Remove the transmission mount bolts on the engine and bevel gear -arrows 1, arrows 2 and arrow 3-.

The transmission support may not be removed until the transmission is removed from the engine.

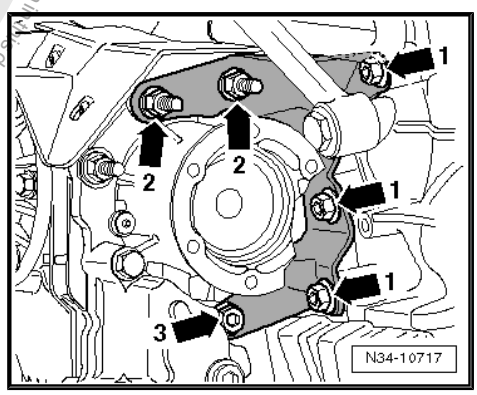

Protected by copyright. Copyright by Volkswagen AG. Volkswagen AG does not guarantee or accept any liability for the use of this document. Copyright by Volkswagen AG.

Vehicles with A Vacuum Diaphragm from 11/2009 -arrow 1-

After 11/2009, a »brace« -arrow 2- is installed under the vacuum diaphragm -arrow 1- at the top of the transmission support (gradual introduction).

– Loosen the bolts -A- that connect the transmission mount to the engine.

– Remove the transmission mount bolts -B- on the bevel gear.

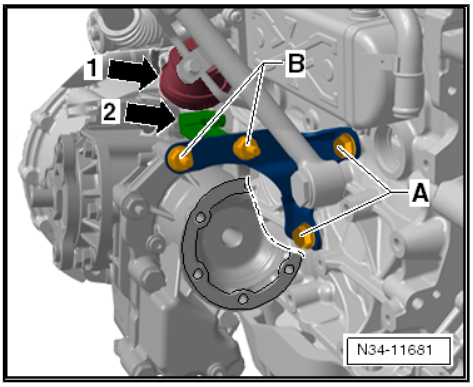

Continuation for All

– Remove the subframe mount bolts -arrows- on the transmission.

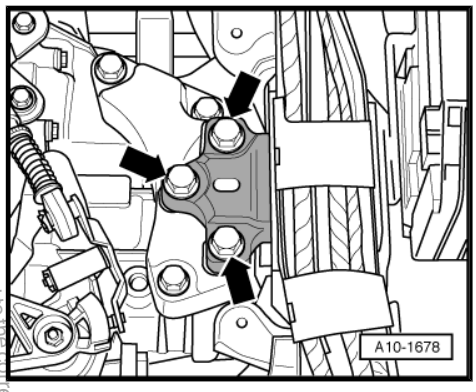

– Adjuster the spindles on the Engine Support Bridge - 10-222A- and lower the transmission to dimension -a-.

• Dimension -a- = approximately 60 mm

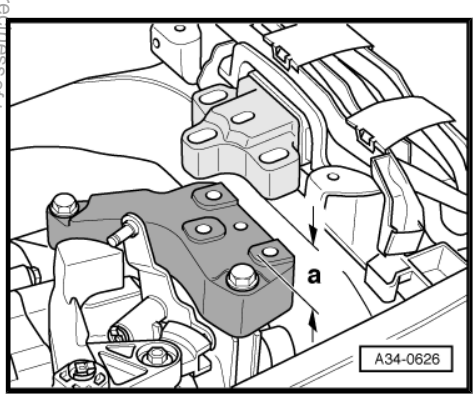

Note

When moving the engine/transmission assembly, be aware of the coolant hoses between the engine and heater core; do not strain.

– Remove the bracket from the transmission -arrows-.

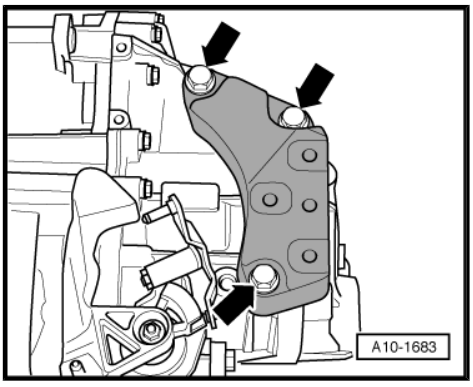

Protected by copyright. Copying for private or commercial purposes, in part or in whole, is not permitted unless authorised by Volkswagen AG. Volkswagen AG does not guarantee or accept any liability with respect to the correctness of information in this document. Copyright by Volkswagen AG.

Metal Relay Lever

– Remove the lock washer -arrow- from the relay lever -1- and then remove the relay lever.

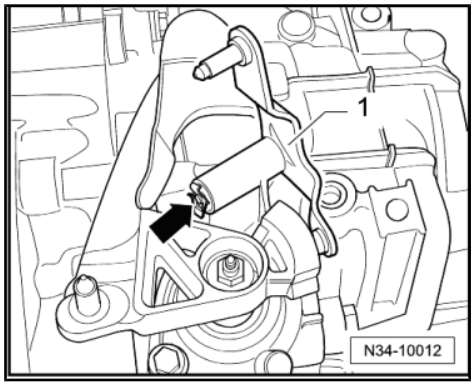

Plastic Relay Lever

– Remove the relay lever with the cable retainer. Refer to ⇒ “1.8 Plastic Relay Lever”, page 89 .

Continuation for All

– Remove the gearshift lever from the gearshift shaft.

– Remove the lower transmission/engine connecting bolts -1 and 2- (engine side).

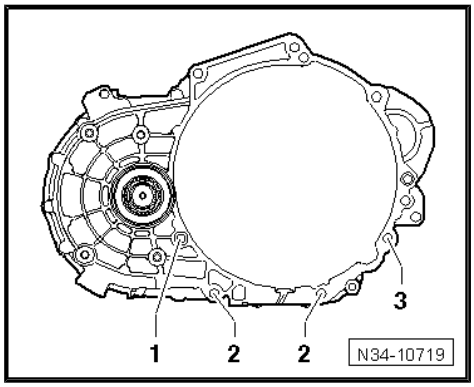

Note

Loosen the engine/transmission connecting bolt -3- and leave it in so that it is hand-tight.

Align the Transmission Support - 3282- with the Transmission Support - Mounting Plate 33 - 3282/33- in order to remove the “02Q AWD” transmission.

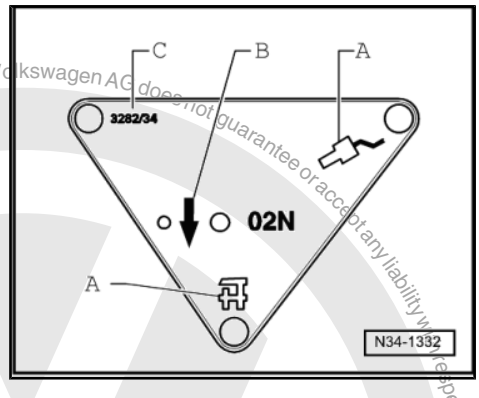

– Insert the Transmission Support - 3282- into the Engine and Gearbox Jack - VAS6931- .

– Align the arms of the Transmission Support - 3282- so that they match up with the holes in the Adjustment Plate .

– Install the Support Elements -A- as illustrated on the Adjustment Plate .

– Install the Transmission Support - Pins 29 - 3282/29- in place of the Mounting Element -C-.

– Position the Engine-Gearbox Jack - VAG1383A- under the vehicle. The arrow symbol -B- on the Adjusting Plate points in direction of travel.

– Align the Adjustment Plate so that it is parallel to the transmission.

– Install the Transmission Support - Pins 29 - 3282/29- into the hole on the transmission for the pendulum support bolt.

– Secure the Slide Hammer Set - Adapter 40 - VW771/40- inside the threaded hole in the transmission housing as shown.

– Secure the transmission on the Transmission Support - 3282- with an M10 x 20 bolt -A-.

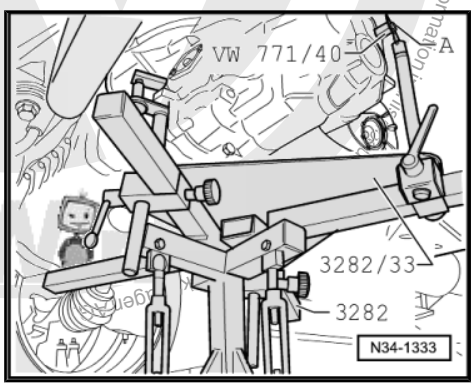

Protected by copyright. Copying for private or commercial purposes, in part or in whole, is not permitted unless authorised by Volkswagen AG. Volkswagen AG does not guarantee or accept any liability with respect to the correctness of information.

– Remove the last engine/transmission connecting bolt -3-.

– Separate the transmission from the engine.

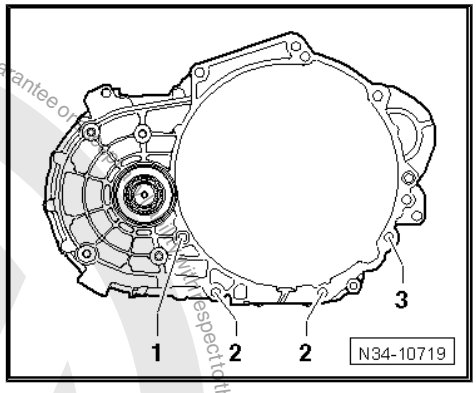

Vehicles with A Particulate Filter

– Remove the transmission support -A- from the bevel box -C-.

Continuation for All

– Move the transmission near the differential/bevel box slightly towards the rear, so that the small cover plate -B- or the intermediate plate is not damaged.

– Then guide the transmission past the flywheel -arrow-.

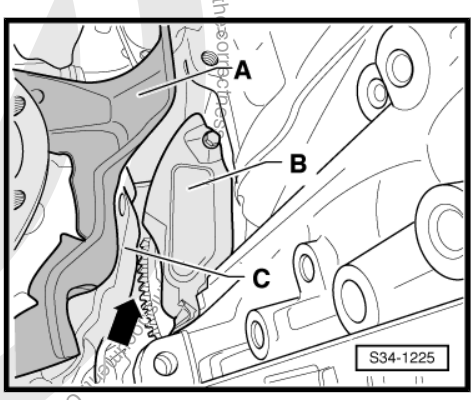

– Then turn the transmission using the spindles -1- and -2- for the Transmission Support - 3282- so that it is does not touch the longitudinal member.

– Carefully lower the transmission.

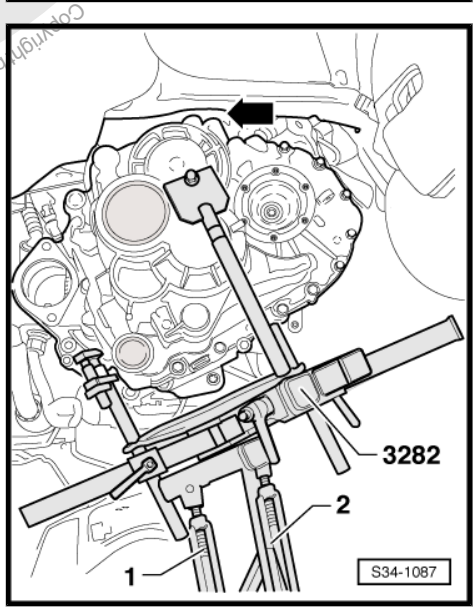

Note

Pay attention to all of the lines when lowering the transmission.

Protected by copyright. Copying for private or commercial purposes in part or in whole, is not permitted unless authorised by Volkswagen AG. Volkswagen AG does not guarantee or

5.1.2 Transmission, Installing

Note

- *Refer to "Transmission, Removing" to get a list of the special tools needed. Refer to* *⇒ "5.1 Transmission, TDI, Removing and Installing", page 166* .
- *Replace the self-locking nuts and bolts.*
- *Replace bolts that were tightened with an additional turn.*
- *Install any cable ties that were loosened or cut off during removal at their same location.*
- *Clean input shaft splines and (on used clutch plates) the hub splines, remove corrosion and apply a very thin coating of Grease for Clutch Disc Shaft Splines - G 000 100- to the splines. Then move the clutch plate back and forth on the input shaft until the hub moves freely on the shaft. Excess grease must be removed.*

– If the transmission is replaced, transfer the transmission shift lever and the relay lever.

– Clean any locking compound residue from all threaded holes using a tap.

– Check whether there are centering sleeves for the engine/ transmission in the cylinder block; install if necessary.

If the alignment sleeves are missing, it will be difficult to shift, there will be clutch problems and the transmission may make noises (loose rattling).

– Make sure the intermediate plate is engaged on the sealing flange and pushed onto the alignment sleeves -arrows-.

– Check the release bearing for wear. Replace the clutch slave cylinder with release bearing if necessary. Refer to ⇒ "2.2 Clutch Slave Cylinder with Release Bearing, Removing and Installing", page 52 .

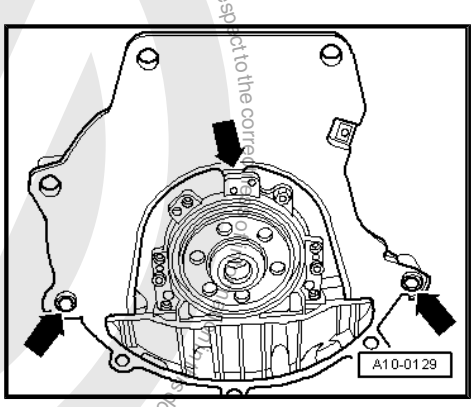

Protected by copyright. Copying for private or commercial purposes, in part or in whole, is not permitted unless authorised by Volkswagen AG. Volkswagen AG does not guarantee or accept any liability with respect to the correctness of this document. Copyright by Volkswagen AG.

Align the Transmission Support - 3282- with the Transmission Support - Mounting Plate 33 - 3282/33- in order to install the “02Q AWD” transmission.

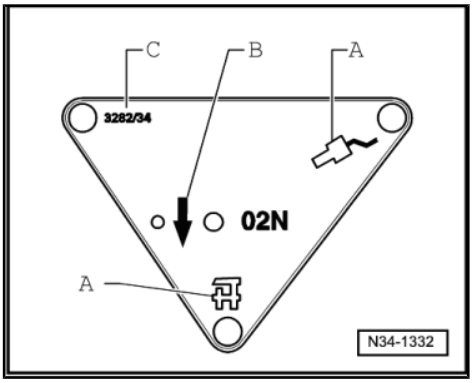

- Align the Transmission Support arms so that they align with the holes in the Adjusting Plate .
- Install the Support Elements -A- as illustrated on the Adjustment Plate .
- Install the Transmission Support - Pins 29 - 3282/29- in place of the Mounting Element -C-.
- Place the transmission on the Engine and Gearbox Jack - VAS6931- .
- Align the Adjustment Plate so that it is parallel to the transmission.
- Install the Transmission Support - Pins 29 - 3282/29- into the hole on the transmission for the pendulum support bolt.

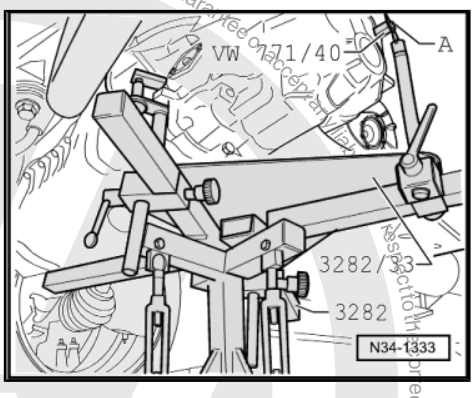

- Secure the Slide Hammer Set - Adapter 40 - VW771/40- inside the threaded hole in the transmission housing as shown.
- Secure the transmission on the Transmission Support - 3282- with an M10 x 20 bolt -A-.
- Position the Engine and Gearbox Jack - VAS6931- under the vehicle. The arrow on the adjusting plate points in direction of travel.

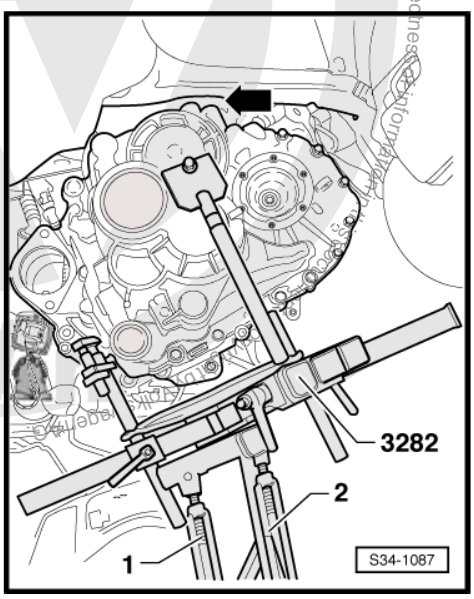

- Position the transmission slightly upwards -arrow- in the area near the differential/bevel box using the spindles -1- and -2- for the Transmission Support - 3282- .

Protected by copyright. Copying for private or commercial purposes, in part or in whole, is not permitted unless authorised by Volkswagen AG. Volkswagen AG does not guarantee or accept any liability with respect to the correctness of information.

Note

- *Pay attention to all of the lines when installing the transmission.*
- *For vehicles with a vacuum diaphragm -arrow-, do not touch the vacuum diaphragm with the bevel box while installing.*

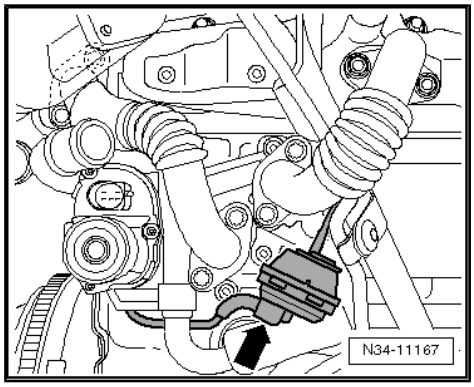

Vehicles with A Particulate Filter

– Lay the transmission support -A- on the bevel box -C- before inserting the transmission.

Continuation for All

– Guide the transmission past the flywheel -arrow- and the small cover plate -B- and the intermediate plate when installing.

– Align the transmission with respect to the engine and install.

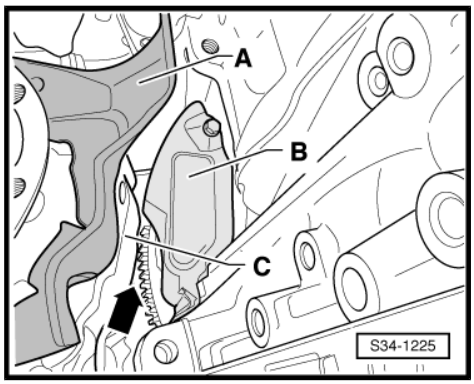

– Install the engine/transmission connecting bolts -1 through 3- and tighten them to the tightening specification. Refer to ⇒ “5.1.3 Tightening Specifications”, page 186

– After transmission is bolted to engine at bottom, remove Transmission Support - 3282- from transmission.

– Attach the transmission gearshift lever to the gearshift shaft. Refer to ⇒ Fig. ““Installing the Transmission Shift Lever““ , page 88 and tighten the nut to tightening specification -item 17- ⇒ Item 17 (page 87) .

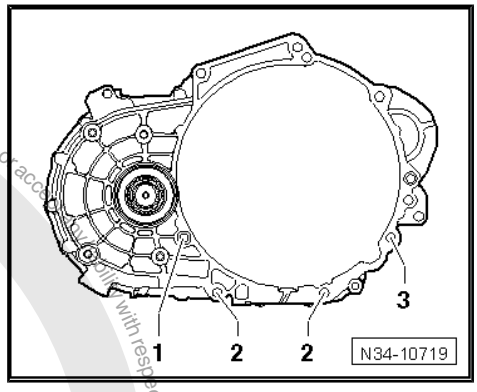

Metal Relay Lever

– Install the relay lever -1- and the lock washer -arrow-.

Plastic Relay Lever

– Install the relay lever with the cable retainer. Refer to ⇒ “1.8 Plastic Relay Lever”, page 89 .

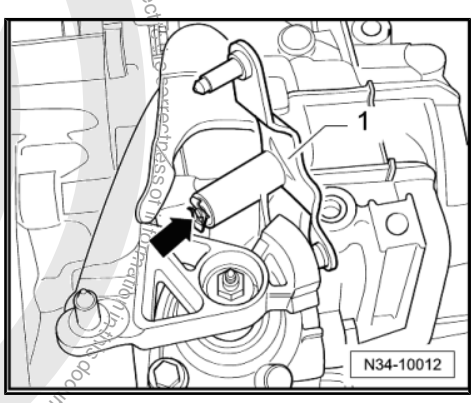

Protected by copyright. Copying for private or commercial purposes, in part or in whole, is not permitted unless authorized by Volkswagen AG. Volkswagen AG does not guarantee or accept any liability with respect to the correctness of information in this document. Copyright by Volkswagen AG.

Continuation for All

– Attach the bracket to the transmission using the new bolts -arrows- and then tighten them to the tightening specification. Refer to ⇒ “5.1.3 Tightening Specifications”, page 186 .

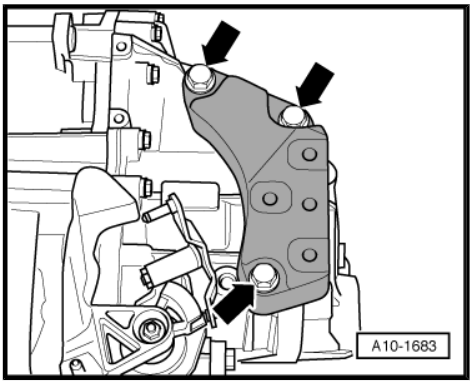

– Align the engine/transmission in its installed position. To do this, tighten the spindles of the Engine Support Bridge -10-222A- until the bracket -1- is in complete contact with the transmission mount -2-.

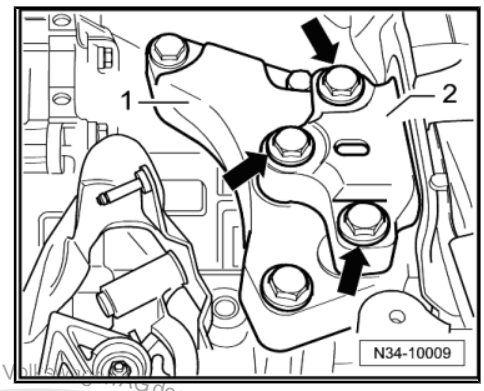

Note

The transmission mount and bracket must be parallel to one another to prevent damaging the thread inside the bracket.

– Install new hex bolts -arrows- for the transmission mount -2- on the bracket -1- and tighten to the tightening specification. Refer to ⇒ “5.1.3 Tightening Specifications”, page 186 .

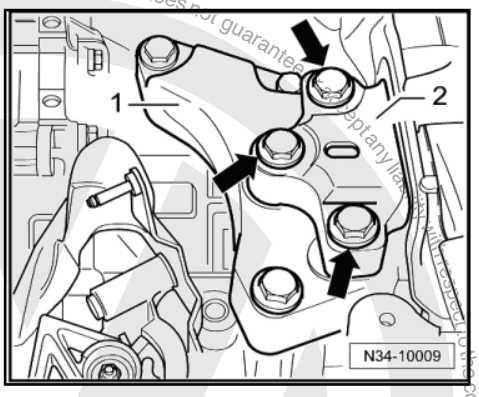

WARNING

Only remove the Engine Support Bridge - 10-222A- when all subframe mount bolts are tightened to the tightening specification.

Note

Install the engine/transmission mount free of tension. Refer to ⇒ Rep. Gr. 10 ; Engine, Removing and Installing .

Vehicles without A Particulate Filter

– Attach the bevel box transmission support to the engine. Follow the tightening sequence when installing the bolts -arrows 1 and arrows 2-. Refer to ⇒ “5.1.3 Tightening Specifications”, page 186 .

– Attach the turbocharger oil return line -A- to the engine. Refer to ⇒ Rep. Gr. 21 .

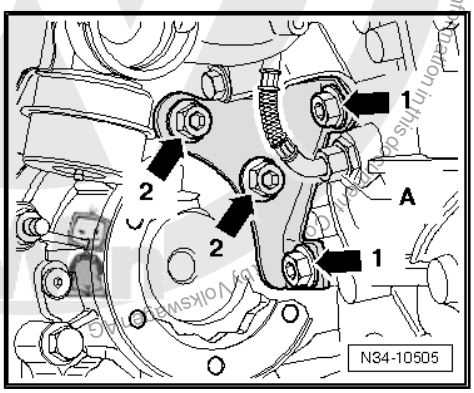

Protected by copyright. Copyright by Volkswagen AG. Volkswagen AG does not guarantee or accept any liability with respect to the correctness of information in this document. Copying for private or commercial purposes, in part or in whole, is not permitted unless authorized by Volkswagen AG.

– Install the support -A-, if equipped. Refer to ⇒ Rep. Gr. 26 .

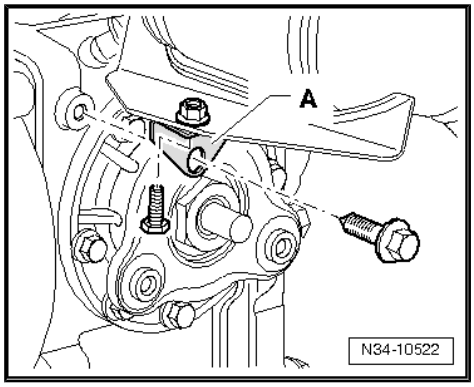

Vehicles with A Particulate Filter

– Attach the bevel gear transmission mount to the engine and bevel gear. Follow the tightening sequence when installing the bolts -arrows 1, arrows 2 and arrow 3-. Refer to ⇒ "5.1.3 Tightening Specifications", page 186 .

The bolt heads may be different from those shown in the illustration.

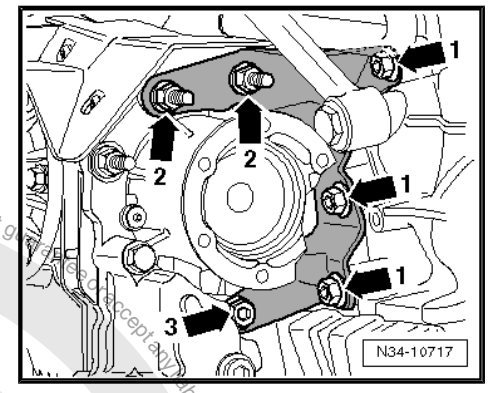

Vehicles with A Vacuum Diaphragm from 11/2009 -arrow 1-

After 11/2009, a »brace« -arrow 2- is installed under the vacuum diaphragm -arrow 1- at the top of the transmission support (gradual introduction).

– Fasten the bevel gear transmission mount to the engine and bevel gear while observing the tightening sequence for the bolts -A and B-. Refer to ⇒ "5.1.3 Tightening Specifications", page 186 .

• The bolt -C- must be screwed in.

– Attach the particulate filter with the particulate filter bracket to the engine. Refer to ⇒ Rep. Gr. 26 .

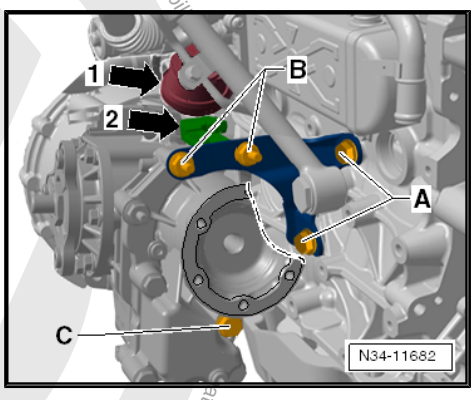

Continuation for All

– Mount the right and left drive axles to the transmission. Refer to ⇒ Suspension, Wheels, Steering; Rep. Gr. 40 ; Drive Axles, Removing and Installing .

– Install the drive axle heat shield on the bevel box -arrows-. Refer to ⇒ Suspension, Wheels, Steering; Rep. Gr. 40 ; Drive Axles, Overview and Servicing; Drive Axle Heat Shield .

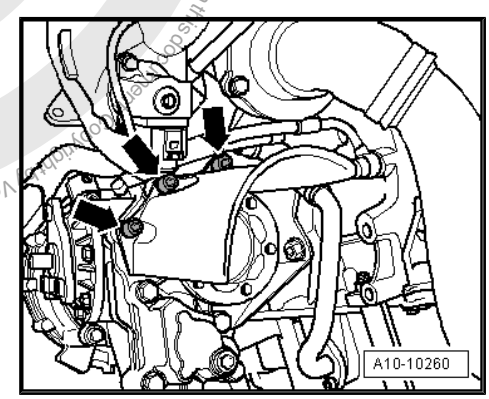

Protected by copyright. Copying or distribution is not permitted unless authorised by Volkswagen AG. Volkswagen AG does not guarantee or accept any liability

– Install the subframe and pendulum support, the stabilizer bar, the mounts, the steering gear and control arms. Refer to ⇒ Suspension, Wheels, Steering; Rep. Gr. 40 ; Subframe; Overview - Subframe .

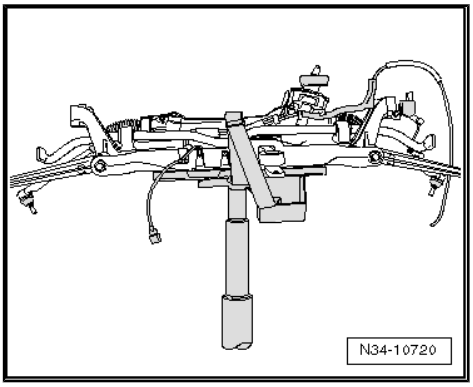

– Attach the driveshaft with the flexible disc to the bevel box flange -arrows-. Refer to ⇒ Rear Final Drive; Rep. Gr. 39 .

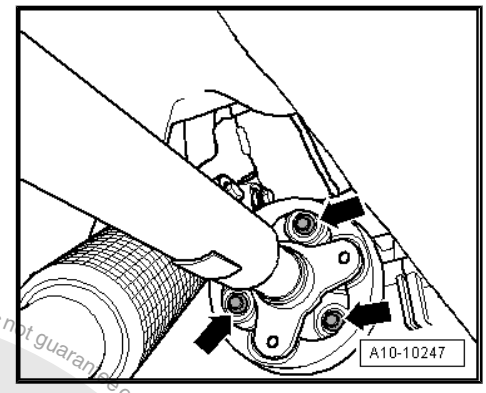

Note

- *The holes for the pendulum support in transmissions from 05/28/2007 have threaded inserts (for example "Heli Coil").*
- *Characteristic: there is a collar on the first thread -arrow-.*
- *Observe the correct bolts and tightening specifications. Refer to ⇒ Suspension, Wheels, Steering; Rep. Gr. 40 ; Subframe; Overview - Subframe .*

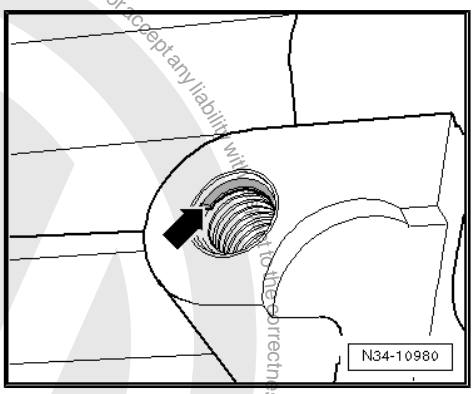

– Attach the pendulum support to the transmission. Refer to ⇒ Suspension, Wheels, Steering; Rep. Gr. 40 ; Subframe; Overview - Subframe .

– Assemble the exhaust system and then attach the exhaust system bracket it to the subframe. Refer to ⇒ Rep. Gr. 26 .

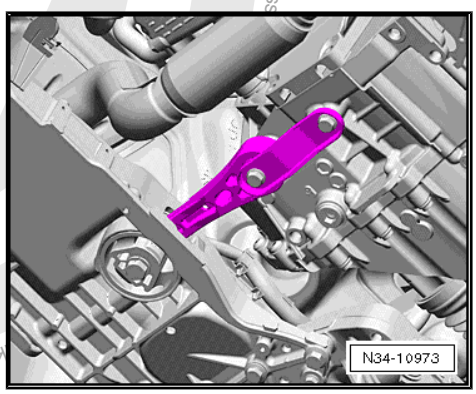

Protected by copyright. Copying for private or commercial purposes, in part or in whole, is not permitted unless authorised by Volkswagen AG. Volkswagen AG does not guarantee or accept any liability with respect to the correctness of information in this document. Copyright by Volkswagen AG.

– Attach the charge air hose -arrow-. Refer to ⇒ Rep. Gr. 21 .

– Install the upper engine/transmission connecting bolts and tighten them to the tightening specification. Refer to ⇒ “5.1.3 Tightening Specifications”, page 186 .

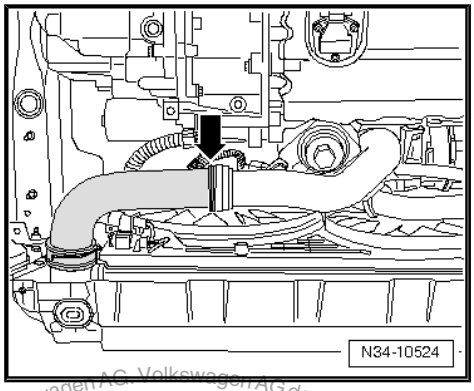

– If equipped, install the breather tube -arrow- in the bevel gear and tighten to 10 Nm.

– Position the starter and install the lower bolt. Refer to ⇒ Electrical Equipment; Rep. Gr. 27 ; Starter; Starter, Removing and Installing .

– Attach the bracket for the lines to the lower starter bolt.

– Install the starter bolt and then connect the connector and wires to the starter. Refer to ⇒ Electrical Equipment; Rep. Gr. 27 ; Starter; Starter, Removing and Installing .

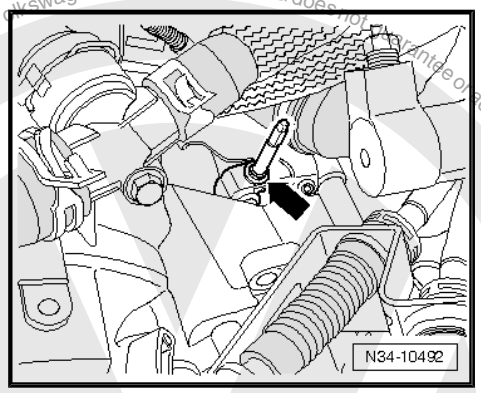

– Attach the ground cable -1- to the top starter bolt.

– Connect the connector -2- to the Back-Up Lamp Switch - F4- .

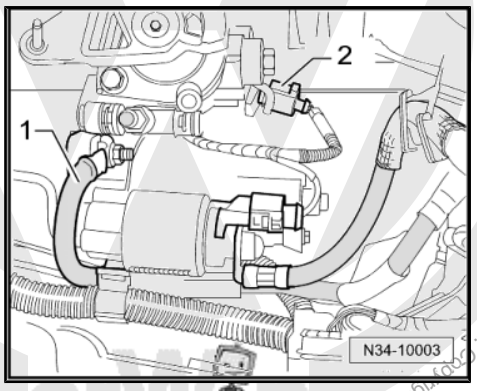

– Transmission on vehicles with Start/Stop System: connect the connector -arrow- to the Transmission Neutral Position Sensor - G701- .

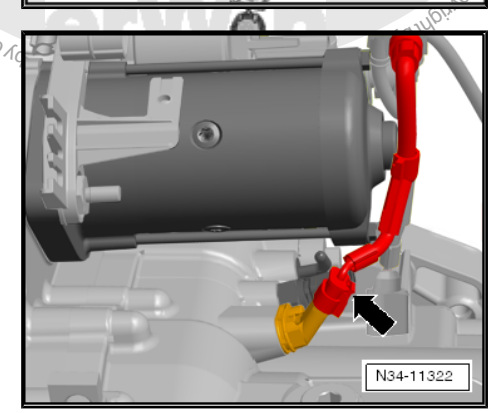

Volkswagen AG. Volkswagen AG does not guarantee or accept any liability with respect to the correctness of information in this document. Copyright by copyright. Copying for private or commercial purposes, in part or in whole, is not permitted unless authorised by Volkswagen AG.

– Push the hose/line assembly or pipe -A- into the bleeder/clutch slave cylinder to the stop and push the clamp -arrow- downward.

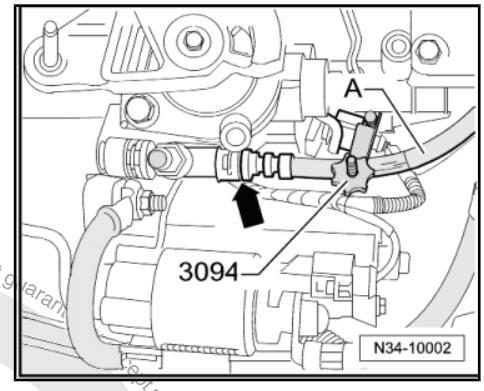

– Pull on the line to make sure it is secure.

– Remove the Hose Clamps - Up To 25mm - 3094- from the hose/line assembly or from the supply hose.

– After removing the Hose Clamps - Up To 25mm - 3094-, bring the return hose back to its original shape.

– Bleed the clutch mechanism. Refer to
⇒ “1.10 Clutch Mechanism, Bleeding”, page 48 .

– Make sure the vacuum hose for the brake system is installed correctly. Refer to ⇒ Brake System; Rep. Gr. 47 ; Hydraulic System .

– Attach the cable mounting bracket to the transmission and tighten the bolts and nuts -arrows- to the tightening specification -item 6- ⇒ Item 6 (page 86) and -item 10-
⇒ Item 10 (page 86) .

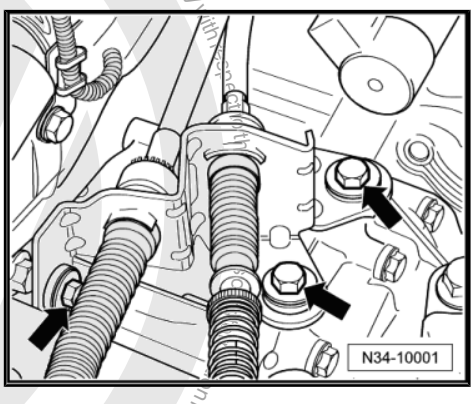

– Apply a small amount of grease to the pin -arrow- on the gearshift lever -1-.

Refer to the Parts Catalog for the grease allocation.

– Slide the shift cable onto the respective pins -arrow- and secure it with a new lock washer -3-.

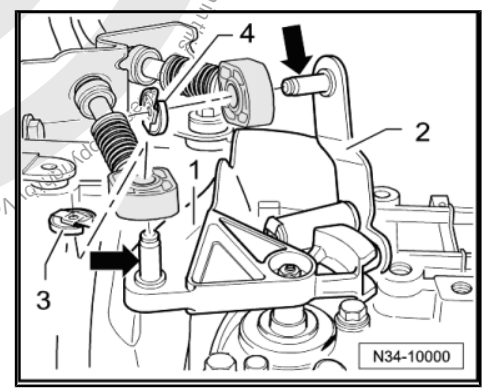

Metal Relay Lever

– Apply a small amount of grease to the pin -arrow- of the relay lever -2-.

Refer to the Parts Catalog for the grease allocation.

– Slide the selector cable onto the respective pins -arrow- and secure it with a new lock washer -4-.

Plastic Relay Lever

– Insert the selector cable into the cable retainer.

Continuation for All

– Adjust the gearshift mechanism. Refer to
⇒ “1.11 Selector Mechanism, Adjusting”, page 97 .

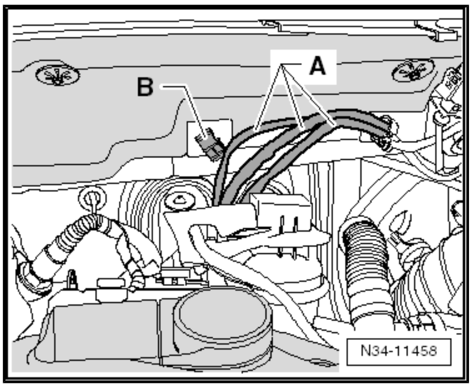

- Secure the lines -A- to the bracket -B-.
- Install the engine cover if necessary.
- Install the complete air filter housing, if it was removed earlier. Refer to ⇒ Rep. Gr. 23 ; Diesel Direct Injection System; Air Filter Housing, Removing and Installing .
- Connect the battery and observe procedure after connecting battery. Refer to ⇒ Electrical Equipment; Rep. Gr. 27 ; Battery; Battery, Disconnecting and Connecting .
- Check transmission fluid level inside the manual transmission. Refer to ⇒ “8 Transmission Fluid, Checking”, page 192 .
- Check the gear oil in the bevel box. Refer to ⇒ “10 Axle Oil in Bevel Box, Checking or Adding”, page 218 .
- Install the lower part of the left front wheel housing liner. Refer to ⇒ Body Exterior; Rep. Gr. 66 ; Wheel Housing Liner .
- Install the noise insulation. Refer to ⇒ Body Exterior; Rep. Gr. 50 ; Noise Insulation .
- Install the wheels. Refer to ⇒ Suspension, Wheels, Steering; Rep. Gr. 44 ; Wheel Installation Tightening Specifications .
- Check the headlamp adjustment if the vehicle has a Left Front Level Control System Sensor - G78- . Refer to ⇒ Electrical Equipment; Rep. Gr. 94 ; Headlamps; Headlamp, Adjusting .

5.1.3 Tightening Specifications

Transmission to Engine (engine flange face)

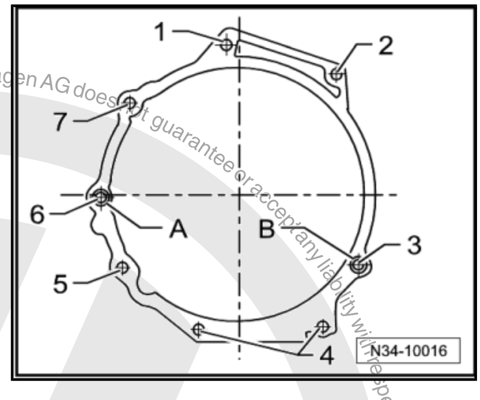

Item	Bolt	Quantity	Nm
1	M12 x 55 ♦ With a short M8 threaded pin	1	80
2	M12 x 55 ♦ With a long threaded pin M8	1	80
3	M12 x 70 or M12 x 65	1	80
4	M10 x 50	2	40
5	M10 x 105	1	40
6	M12 x 165 ♦ With a short M8 threaded pin ♦ Also starter to transmission	1	80

Protected by copyright. Copying for private or commercial purposes, in part or in whole, is not permitted unless authorised by Volkswagen AG. Volkswagen AG does not guarantee or accept any liability with respect to the correctness of information in this document. Copyright by Volkswagen AG.

Item	Bolt	Quantity	Nm
7	M12 x 165 ♦ With a short M8 threaded pin ♦ Also starter to transmission	1	80
-	M6 x 8 ♦ Small flywheel cover plate (not present on all engines)	1	10

-A- and -B-: alignment bushings

Vehicles without A Particulate Filter

Install the Transmission Mount.

The following assembly sequence must be followed when installing the transmission mount:

– Install the bolts -arrows 1- hand-tight.
– Tighten the bolts -arrows 2- to 40 Nm.
– Tighten the bolts -arrows 1- to 40 Nm.

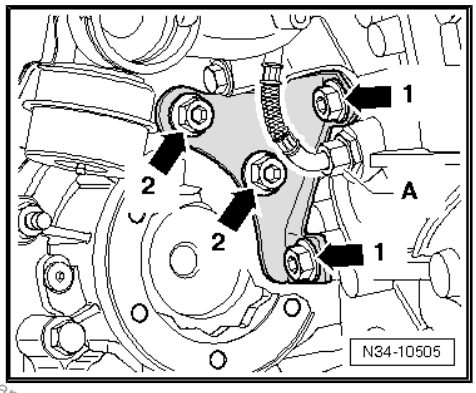

Vehicles with A Particulate Filter

Install the Transmission Mount.

Allocation of bolts

Item	Bolt	Quantity
1	M10 x 21	3
2	M10 x 45	2
3	M10 x 62	1

The following assembly sequence must be followed when installing the transmission mount:

– Hand-tighten all bolts.
– Tighten the bolts -arrows 2 and arrow 3- to 40 Nm.
– Tighten the bolts -arrows 1- to 40 Nm.

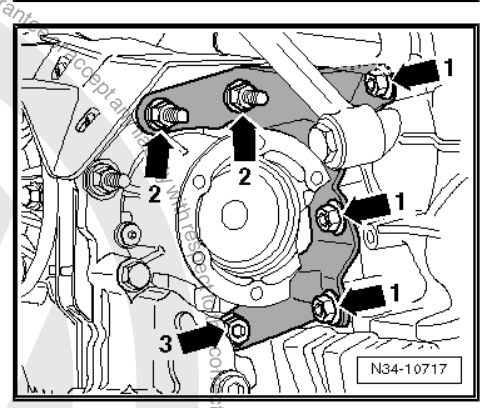

Protected by copyright. Copying for private or commercial purposes, in part or in whole, is not permitted unless authorised by Volkswagen AG. Volkswagen AG does not guarantee or accept any liability with respect to the correctness of information in this document. Copyright by Volkswagen AG.

Vehicles with A Vacuum Diaphragm from 11/2009 -arrow 1-

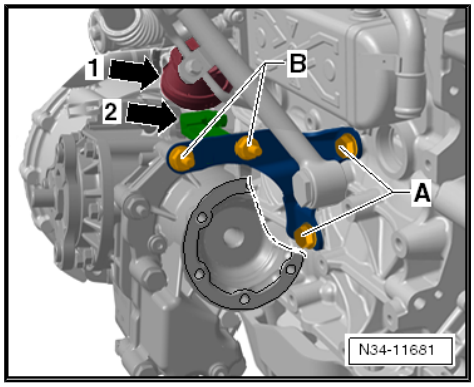

From 11/2009, there is a »brace« -arrow 2- under the vacuum diaphragm -arrow 1- at the top of the transmission support (running change).

Allocation of bolts

Item	Bolt	Quantity
A	M10 x 21	2
B	M10 x 45	2

The following assembly sequence must be followed when installing the transmission mount:

– Hand-tighten all bolts.

– Tighten the bolts -A- to 40 Nm.

– Tighten the bolts -B- to 40 Nm.

Continuation for All

Transmission Bracket -1- to Transmission.

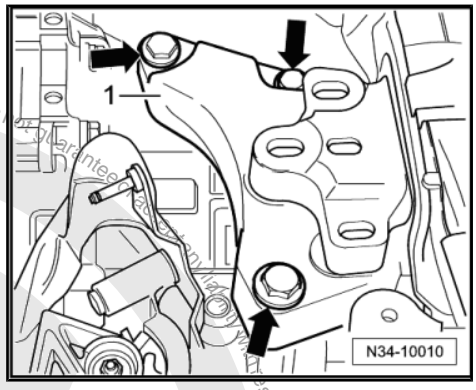

– Replace the bolts.

Tighten the bolts -arrows-: 60 Nm + 90°.

Transmission to Body

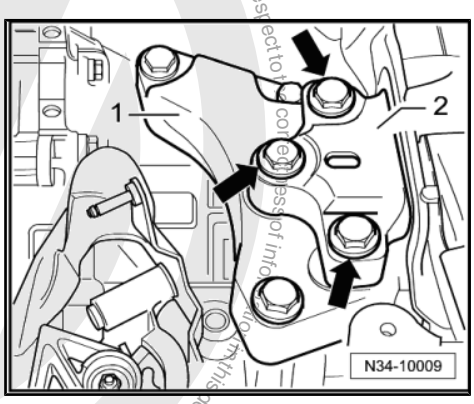

– Replace the bolts.

Tighten the bolts -arrows-: 60 Nm + 90°.

Note

Install the engine/transmission mount free of tension. Refer to ⇒ Rep. Gr. 10 ; Engine, Removing and Installing .

Protected by copyright. Copying for private or commercial purposes, in part or in whole, is not permitted unless authorised by Volkswagen AG. Volkswagen AG does not guarantee or accept any liability with respect to the correctness of information in this document. Copyright by Volkswagen AG.

6 Transmission, Transporting

⇒ “6.1 FWD, Transporting Transmission”, page 189

⇒ “6.2 AWD, Transporting Transmission”, page 189

6.1 FWD, Transporting Transmission

Special tools and workshop equipment required

- ♦ Transmission Support Jig - 3336-
- ♦ Shop Crane - VAS6100-

– Attach the Transmission Support Jig - 3336- to the clutch housing.

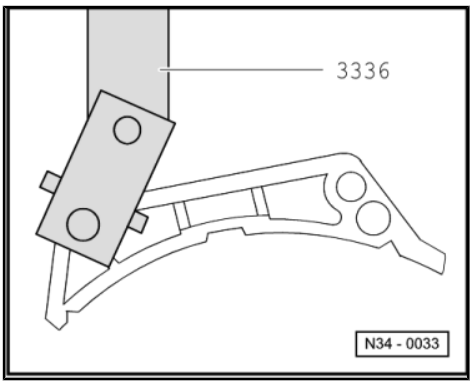

– Move the support arm on the sliding bar using the locking bolt -arrow-.

Number of visible holes = 6.

– Lift the transmission with a workshop crane and the Transmission Support Jig - 3336- .

– Set the transmission down, for example, into the transport container.

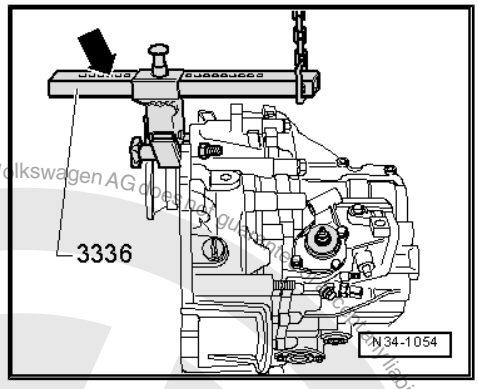

6.2 AWD, Transporting Transmission

Special tools and workshop equipment required

- ♦ Transmission Support Jig - 3336-
- ♦ Shop Crane - VAS6100-

– Attach the Transmission Support Jig - 3336- to the clutch housing.

Protected by copyright. Copying for private or commercial purposes, in part or in whole, is not permitted unless authorised by Volkswagen AG. Volkswagen AG does not guarantee or accept any liability with respect to the correctness of information in this document. Copyright by Volkswagen AG.

– Move the support arm on the sliding bar using the locking bolt -arrow-.

Number of visible holes = 9.

– Lift the transmission with a workshop crane and the Transmission Support Jig - 3336- .

– Set the transmission down, for example, into the transport container.

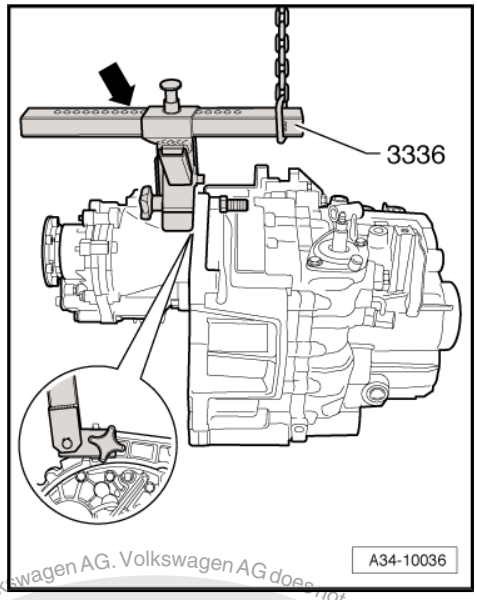

Protected by copyright. Copying for private or commercial purposes, in part or in whole, is not permitted unless authorised by Volkswagen AG. Volkswagen AG does not guarantee or accept any liability with respect to the correctness of information in this document. Copyright by Volkswagen AG.

7 Transmission, Securing in Engine/ Transmission Holder

Special tools and workshop equipment required

- Holding Plate - VW309A-
- Transmission Support - VW353-
- Engine and Transmission Holder - VAS6095A-

Procedure

– Secure the transmission with the Transmission Support - VW353- to the Holding Plate - VW309- -arrows-.

– Insert the Holding Plate - VW309- in the Engine and Gearbox Bracket - VAS6095A- .

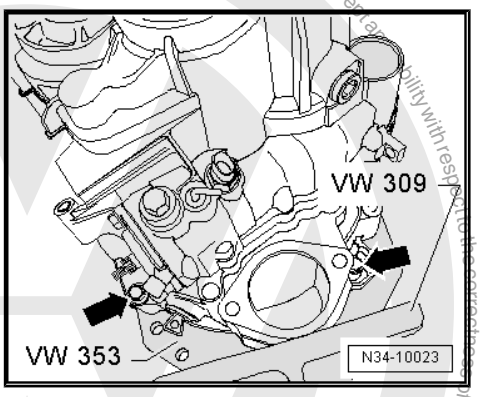

Protected by copyright. Copying for private or commercial purposes, in part or in whole, is not permitted unless authorised by Volkswagen AG. Volkswagen AG does not guarantee or accept any liability with respect to the correctness of information in this document. Copyright by Volkswagen AG.

8 Transmission Fluid, Checking

Special tools and workshop equipment required

- Torque Wrench 1331 5-50Nm - VAG1331-
- Triple Square Socket Driver - 3357-
- Used Oil Collection and Extraction Unit - SMN372500-

Transmission fluid specification. Refer to the Parts Catalog.

– Remove the noise insulation. Refer to ⇒ Body Exterior; Rep. Gr. 50 ; Noise Insulation .

– Place the Used Oil Collection and Extraction Unit - SMN372500- under the transmission.

– Remove the plug for checking the transmission fluid level -arrow-.

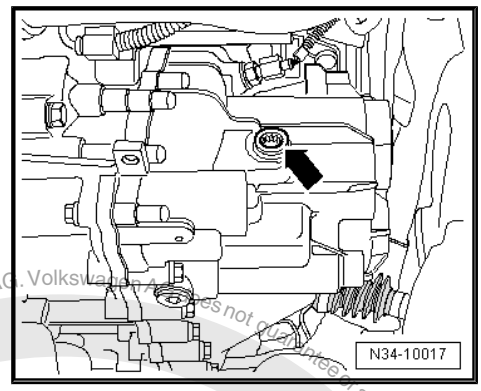

The level is correct when the transmission fluid comes up to the bottom edge of oil filler hole.

– Install the plug -arrow- with a new seal.

– Tighten the plug -arrow- to the tightening specification. Refer to
⇒ Fig. ""Different Versions of the Oil Fill and Drain Plugs"" , page 192 .

Note the Following when Filling for the First Time

– Remove the plug -arrow-.

– Add transmission fluid until it reaches the lower edge of the filler hole.

– Install the plug -arrow- with a new seal.

– Tighten the plug -arrow- to the tightening specification. Refer to
⇒ Fig. ""Different Versions of the Oil Fill and Drain Plugs"" , page 192 .

– Install the noise insulation. Refer to ⇒ Body Exterior; Rep. Gr. 50 ; Noise Insulation .

Different Versions of the Oil Fill and Drain Plugs

I - Oil filler or drain plug with multi-point socket head, 45 Nm

II - Oil filler or drain plug with hex socket head, 30 Nm

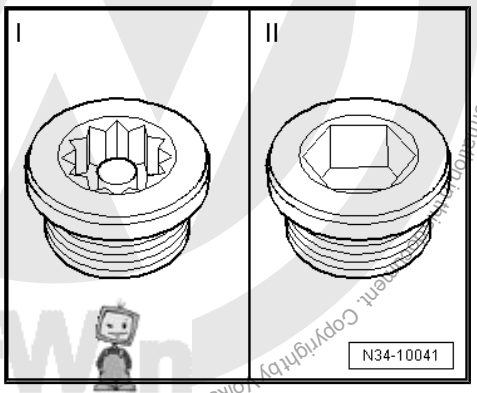

Protected by copyright. Copying for private or commercial purposes, in part or in whole, is not permitted unless authorised by Volkswagen AG. Volkswagen AG does not guarantee or accept any liability with respect to the correctness of information. Copyright by Volkswagen AG.

9 Bevel Box, Removing and Installing

⇒ “9.1 Bevel Box, Vehicles with TDI Engine without Particulate Filter, Removing and Installing”, page 193

⇒ “9.2 Bevel Box, Removing and Installing, Vehicles with a Turbo Diesel Engine with a Particulate Filter, through approximately 10/2009”, page 201

⇒ “9.3 Bevel Box, Removing and Installing, Vehicles with a Turbo Diesel Engine with a Particulate Filter, through Approximately 11/2009”, page 211

9.1 Bevel Box, Vehicles with TDI Engine without Particulate Filter, Removing and Installing

Volkswagen AG. Volkswagen AG does not guarantee or accept any liability with respect to the correctness of information in this document. Copyright by Volkswagen AG. Copying for private or commercial purposes, in part or in whole, is not permitted unless authorised by Volkswagen AG.

⇒ “9.1.1 Bevel Box, Removing”, page 193

⇒ “9.1.2 Bevel Box, Installing”, page 198

⇒ “9.1.3 Tightening Specifications”, page 201

Special tools and workshop equipment required

- Socket And Extended Bit - T10107A-
- Torque Wrench 1331 5-50Nm - VAG1331-
- Allocate the grease for gearshift mechanism. Refer to the Parts Catalog.

9.1.1 Bevel Box, Removing

Check whether a breather tube -arrow- is mounted on the bevel gear.

– Remove the entire air filter housing if necessary. Refer to ⇒ Rep. Gr. 23 ; Diesel Direct Injection System; Air Filter Housing, Removing and Installing .

To remove breather tube, shift mechanism must be removed from transmission:

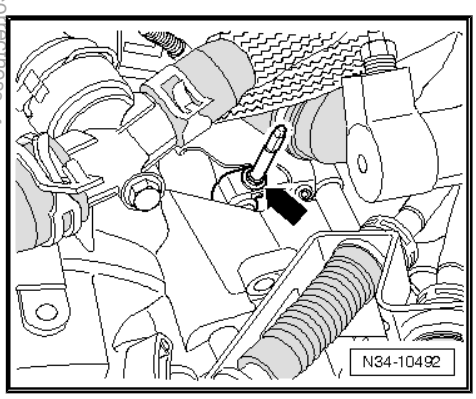

– Remove the shift cable lock washer -3- from the transmission shift lever -1- and remove the cable from the pin -arrow-.

Metal Relay Lever

– Remove the selector cable lock washer -4- from the relay lever -2- and remove the cable from the pin -arrow-.

Plastic Relay Lever

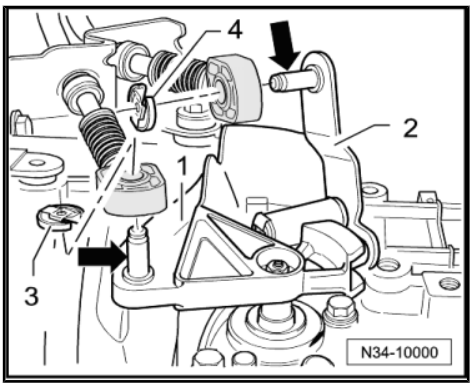

– Remove the cable retainer from the selector cable.

• To avoid damage to the selector cable, the cable retainer must be disconnected from the selector lever before removal.

– Pull the securing mechanism all the way forward in direction of -arrow 1- and then unlock to the left in direction of -arrow 2-.

– Press the relay lever forward (in the direction of -arrow 3-).

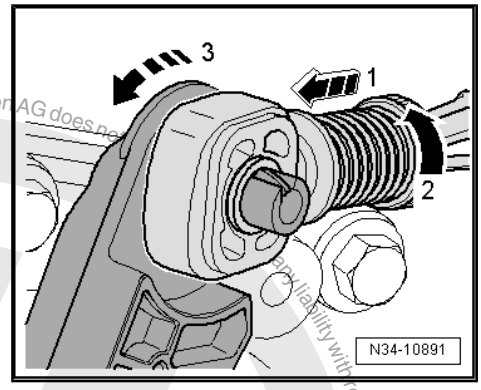

– Remove the cable bracket from the transmission -arrows-, tie up to the side.

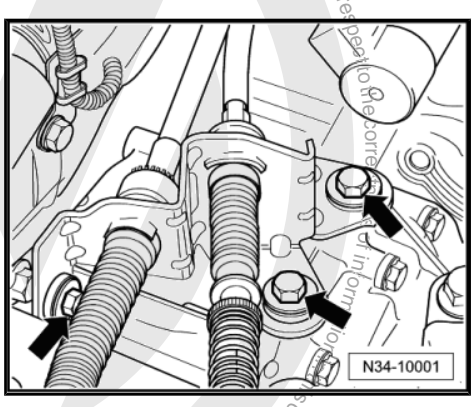

– Remove the breather tube from the bevel gear -arrow-.

Continuation for All

– Raise the vehicle.

– Remove the noise insulation. Refer to ⇒ Body Exterior; Rep. Gr. 50 ; Noise Insulation .

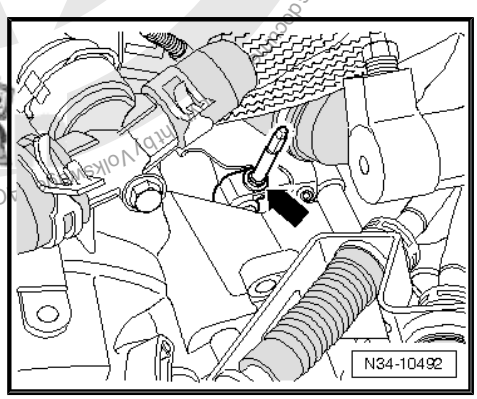

– Disconnect the exhaust system at the clamping sleeve and remove the exhaust system bracket from the subframe -arrows-.

– Tie up the front exhaust pipe.

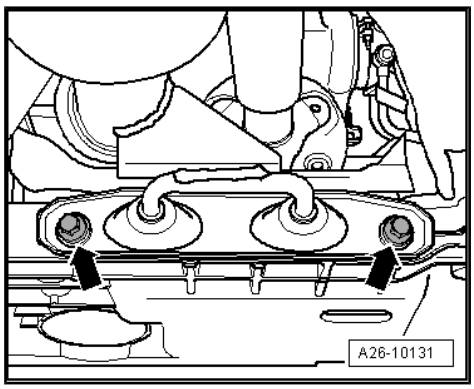

Protected by copyright. Copying for private or commercial purposes, in part or in whole, is not permitted unless authorised by Volkswagen AG. Volkswagen AG does not guarantee or accept any liability with respect to the correctness of information.

– Mark the position of the driveshaft with the flexible disk to the bevel gear flange.

– Remove the driveshaft and flexible disk from the bevel gear flange shaft -arrows-.

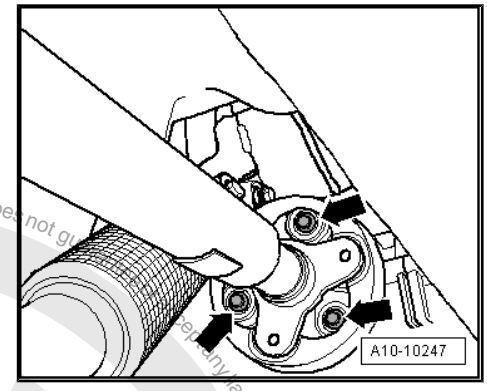

– Disconnect the connector -1- from the Oil Level Thermal Sensor - G266- .

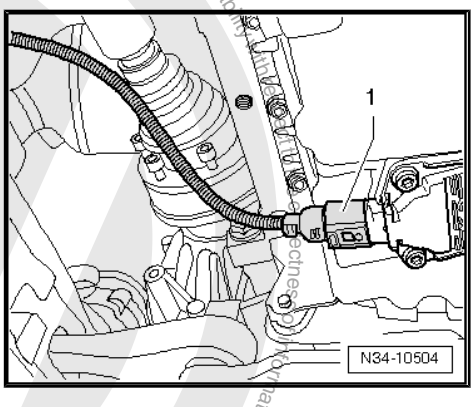

– Remove the pendulum support from the transmission.

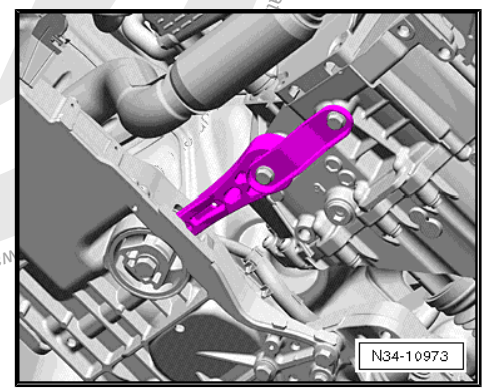

Note

After loosening the pendulum support bolts, the engine/transmission assembly swings forward slightly (toward the front end). Ensure that the sealing ring -arrow- in the flange of the driveshaft is not damaged during removal and installation.

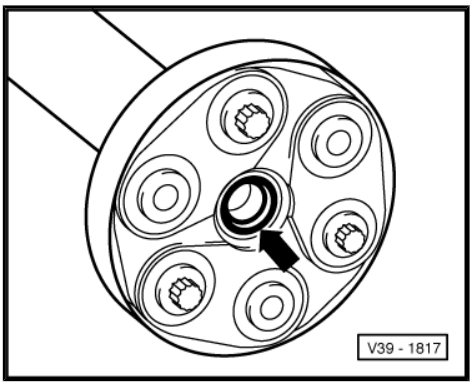

– Press the engine/transmission assembly slightly forward (toward the front end) and pull the driveshaft off of the bevel gear.

– Lift the driveshaft and secure it.

– Remove the left and right coupling rods from the stabilizer bar.

Protected by copyright. Copying for private or commercial purposes, in part or in whole, is not permitted unless authorised by Volkswagen AG. Volkswagen AG does not guarantee the accuracy, liability, or the actual use of the technical information.

– Remove the nuts -arrows- for the ball joint on the control arm.

– Secure the subframe before removing. Refer to ⇒ Suspension, Wheels, Steering; Rep. Gr. 40 ; Subframe; Subframe, Securing .

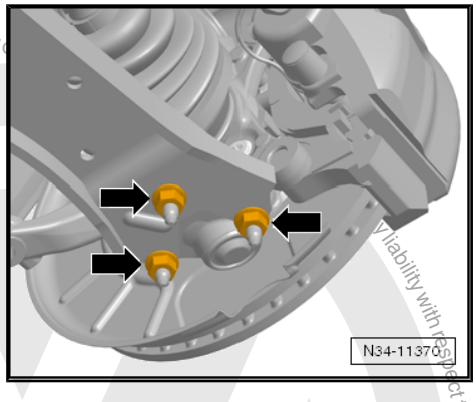

– Remove subframe with pendulum support, stabilizer bar, brackets, steering gear and control arms. Refer to ⇒ Suspension, Wheels, Steering; Rep. Gr. 40 ; Subframe; Overview - Subframe .

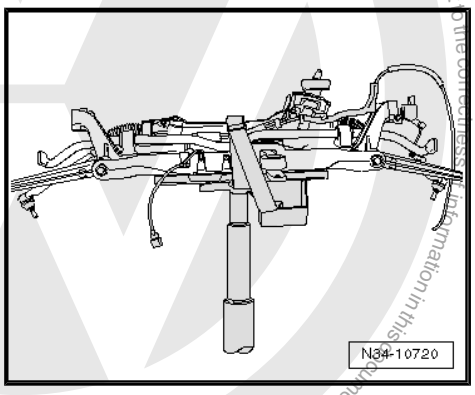

– Remove the right drive axle heat shield from bevel box -arrows-.

– Remove right drive axle from transmission flange shaft.

– Secure the drive axle. Do not damage the protective coating when doing this.

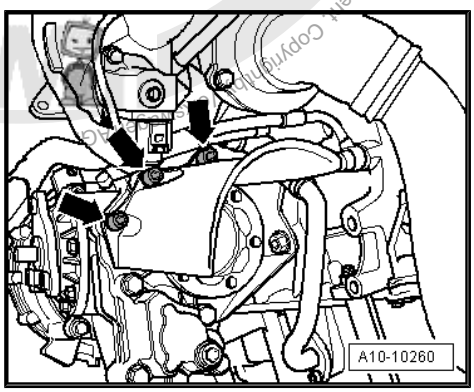

– Remove the turbocharger oil return line -A- from the engine. Refer to ⇒ Rep. Gr. 21 .

– Remove the transmission mount bolts at the engine and bevel gear -arrows 1 and arrows 2-.

– Remove the transmission mount.

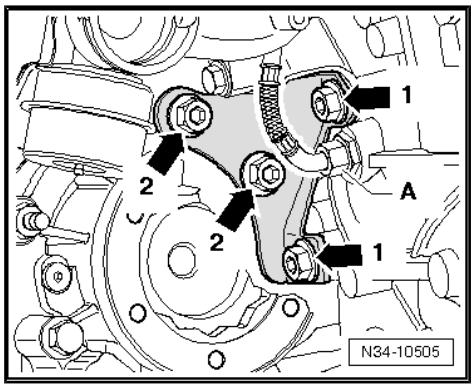

– Remove the support -A-, if equipped. Refer to ⇒ Rep. Gr. 26 .

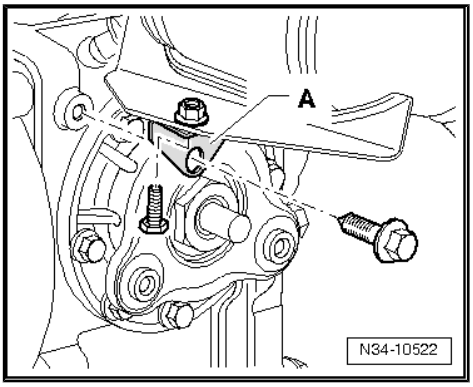

– Remove the right flange shaft bolt with a Socket for example Socket and Extended Bit - T10107A- -arrow 1-.

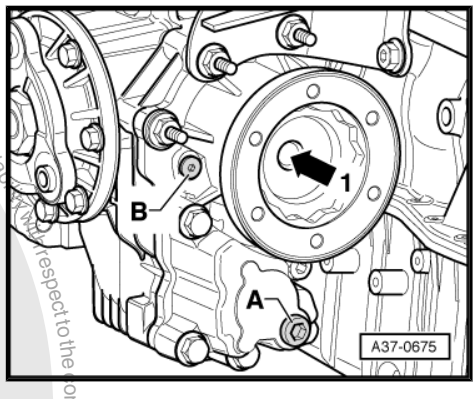

Note

Right flanged shaft remains in bevel box.

– Remove the lower bevel gear mounting bolts -arrows- at the manual transmission.

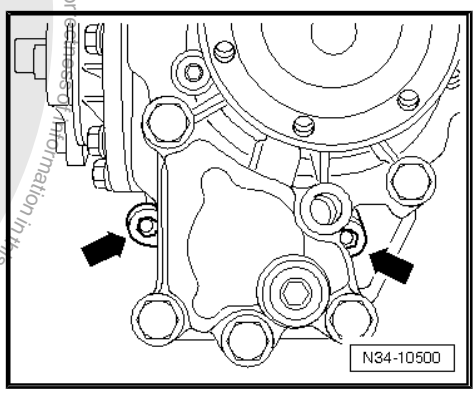

– Remove upper bevel box mounting bolt at manual transmission:

A heat shield -arrow A- is installed on the upper side of the bevel box on some vehicles.

The bolt -arrow B- is accessible from under the heat shield.

The bolt -arrow C- is accessible from above the heat shield.

– Carefully press bevel box off manual transmission while protecting it against falling through.

– Remove bevel box.

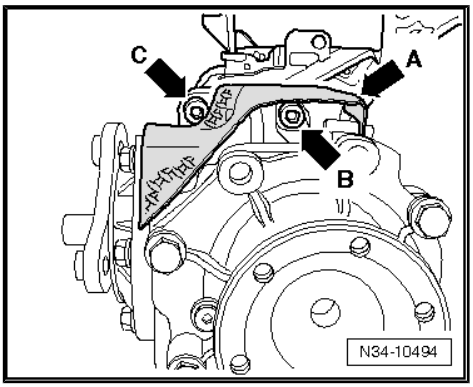

Protected by Copyright. Copyright by Volkswagen AG. Volkswagen AG does not guarantee or accept any liability with respect to the correctness of information in this document. Copyright by Volkswagen AG. Protected by Copyright. Copying for private or commercial purposes, in part or in whole, is not permitted unless authorized by Volkswagen AG.

– The heat shield -A- must be removed -arrows- if the bevel box is being replaced.

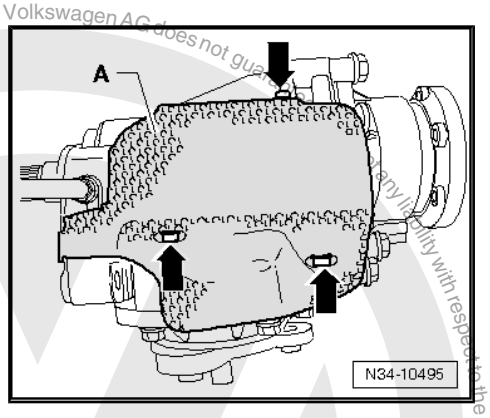

9.1.2 Bevel Box, Installing

Install in reverse order of removal while. Note the following:

– With the manual transmission installed, lubricate differential splines with Grease for Clutch Disc Shaft Splines - G 000 100- .

– If the bevel box is being replaced, then install heat shield -A-.

– Tighten the mounting bolts -arrows- to 5 Nm.

– Slide on bevel box completely on manual transmission, while doing this, join splines of input shaft/bevel box centrally with differential.

– Bring the right drive axle splines and the differential bevel gear into alignment. Rotate the flange shaft if necessary.

– With proper tooth position and central guiding, bevel box slips up to stop against manual transmission.

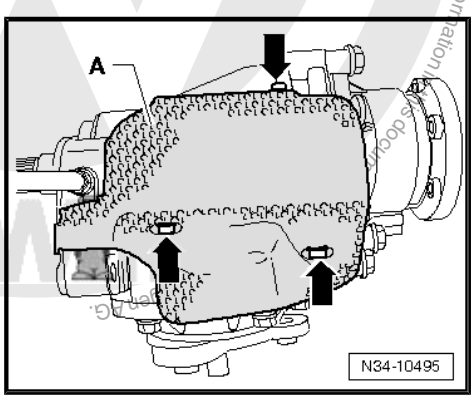

A heat shield -arrow A- is installed on the upper side of the bevel box on some transmissions.

– Upper bevel box mounting bolts at manual transmission are accessible as follows:

The bolt -arrow B- is accessible from under the heat shield.

The bolt -arrow C- is accessible from above the heat shield.

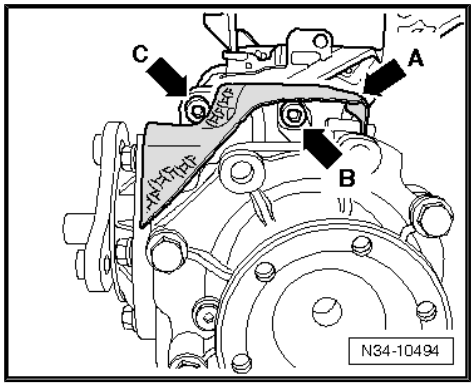

Note

Do not pull bevel box with mounting bolts against the transmission. Otherwise bevel box is canted and mounting eyelets can break off.

– Attach the bevel box transmission support to the engine. Follow the tightening sequence when installing the bolts -arrows 1 and arrows 2-. Refer to ⇒ “9.1.3 Tightening Specifications”, page 201 .

– Attach the turbocharger oil return line -A- to the engine. Refer to ⇒ Rep. Gr. 21 .

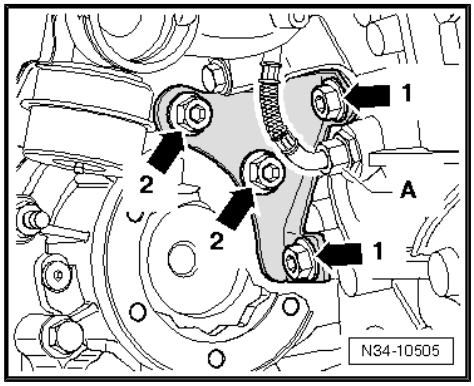

– Install the support -A-, if equipped. Refer to ⇒ Rep. Gr. 26 .

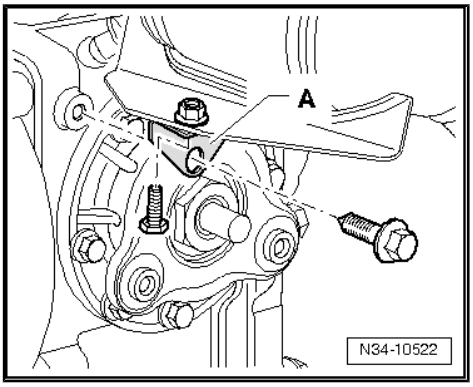

– Mount the right drive axle to the transmission. Refer to ⇒ Suspension, Wheels, Steering; Rep. Gr. 40 ; Drive Axles, Removing and Installing .

– Attach the right drive axle heat shield to the bevel box -arrows- and tighten it to the tightening specification. Refer to ⇒ “9.1.3 Tightening Specifications”, page 201 .

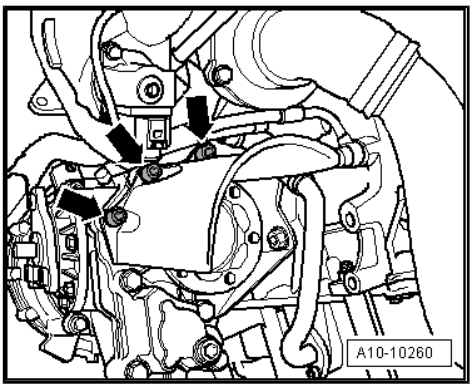

– Install subframe with pendulum support, stabilizer bar, brackets, steering gear and control arms. Refer to ⇒ Suspension, Wheels, Steering; Rep. Gr. 40 ; Subframe; Overview - Subframe .

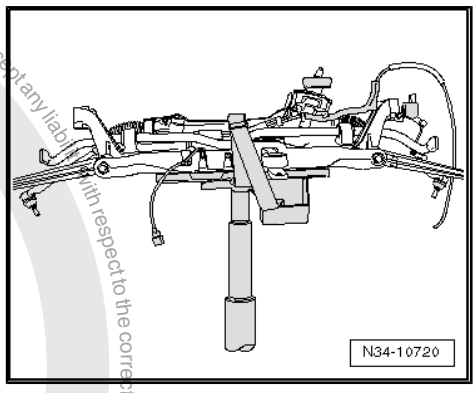

– Attach the driveshaft with the flexible disc to the bevel box flange -arrows-. Refer to ⇒ Rear Final Drive; Rep. Gr. 39 .

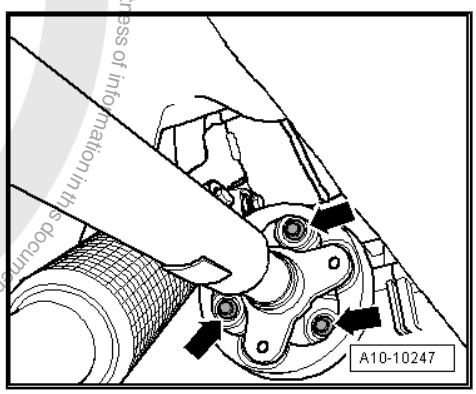

Protected by copyright. Copying for private or commercial purposes, in part or in whole, is not permitted unless authorised by Volkswagen AG. Volkswagen AG does not guarantee or accept any liability with respect to the correctness of information in this document. Copyright by Volkswagen AG.

Note

- *The holes for the pendulum support in transmissions from 05/28/2007 have threaded inserts (for example "Heli Coil").*
- *Characteristic: there is a collar on the first thread -arrow-.*
- *Pay attention to the corresponding bolts and tightening specifications. Refer to ⇒ Suspension, Wheels, Steering; Rep. Gr. 40 ; Subframe; Overview - Subframe .*

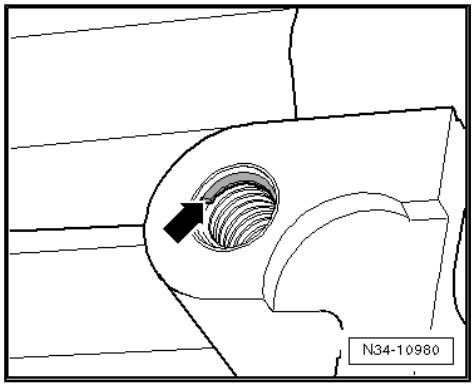

– Attach the pendulum support to the transmission. Refer to ⇒ Suspension, Wheels, Steering; Rep. Gr. 40 ; Subframe; Overview - Subframe .

– Assemble the exhaust system and then attach the exhaust system bracket it to the subframe. Refer to ⇒ Rep. Gr. 26 .

– Check the gear oil in the bevel box. Refer to ⇒ "10 Axle Oil in Bevel Box, Checking or Adding", page 218 .

– Check transmission fluid level inside the manual transmission. Refer to ⇒ "8 Transmission Fluid, Checking", page 192 .

– Install the noise insulation. Refer to ⇒ Body Exterior; Rep. Gr. 50 ; Noise Insulation .

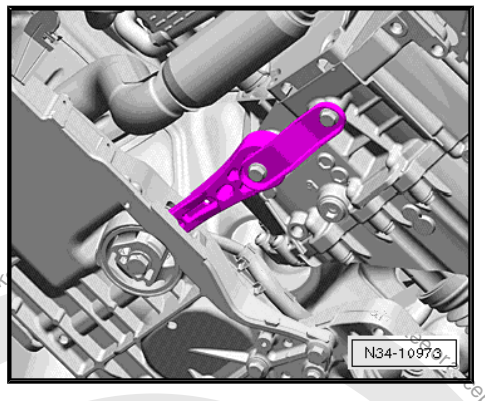

– If equipped, install the breather tube -arrow- in the bevel gear and tighten to 10 Nm.

If shift mechanism was removed from transmission:

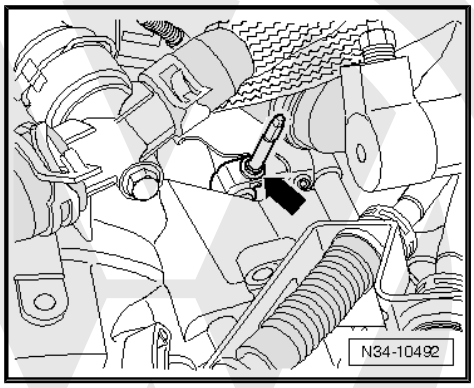

– Attach the cable mounting bracket to the transmission and tighten the bolts and nuts -arrows- to the tightening specification -item 6- ⇒ Item 6 (page 86) and -item 10- ⇒ Item 10 (page 86) .

– Install and adjust shift mechanism. Refer to ⇒ "1.9 Selector Mechanism, Removing and Installing", page 92 .

– Install complete air filter housing. Refer to ⇒ Rep. Gr. 23 ; Diesel Direct Injection System; Air Filter Housing, Removing and Installing .

– Check the headlamp adjustment if the vehicle has a Left Front Level Control System Sensor - G78- . Refer to ⇒ Electrical Equipment; Rep. Gr. 94 ; Headlamps; Headlamp, Adjusting .

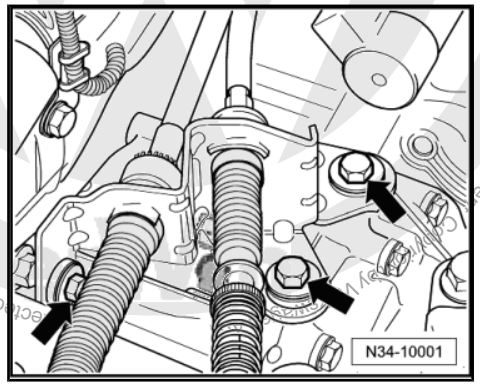

Protected by copyright. Copying for private or commercial purposes, in part or in whole, is not permitted unless authorised by Volkswagen AG. Volkswagen AG does not guarantee or accept any liability with respect to the correctness of information in this document.

9.1.3 Tightening Specifications

Installing the Transmission Support on TDI Vehicles

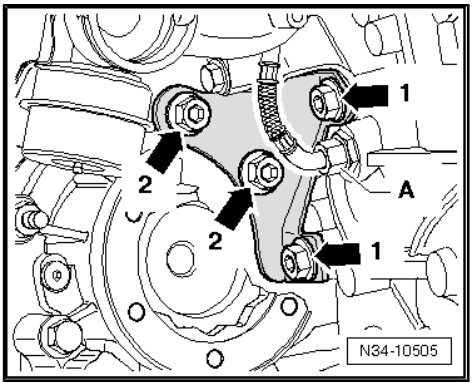

The following assembly sequence must be followed when installing the transmission mount:

– Install the bolts -arrows 1- hand-tight.

– Tighten the bolts -arrows 2- to 40 Nm.

– Tighten the bolts -arrows 1- to 40 Nm.

Bevel box to manual transmission ♦ Replace the bolts.	-item 17- ⇒ Item 17 (page 235)
Right heat shield/drive axle to bevel gear	20 Nm

9.2 Bevel Box, Removing and Installing, Vehicles with a Turbo Diesel Engine with a Particulate Filter, through approximately 10/2009

⇒ "9.2.1 Bevel Box, Removing", page 202

⇒ "9.2.2 Bevel Box, Installing", page 208

⇒ "9.2.3 Tightening Specifications", page 210

Note

Transmission mount from approximately 11/2009: Bevel Box, Removing and installing. Refer to
⇒ "9.3 Bevel Box, Removing and Installing, Vehicles with a Turbo Diesel Engine with a Particulate Filter, through Approximately 11/2009", page 211 .

Identification: The Transmission Support is Secured with the Bolts -arrows 1 … 3- to the Engine and the Bevel Box through Approximately 10/2009.

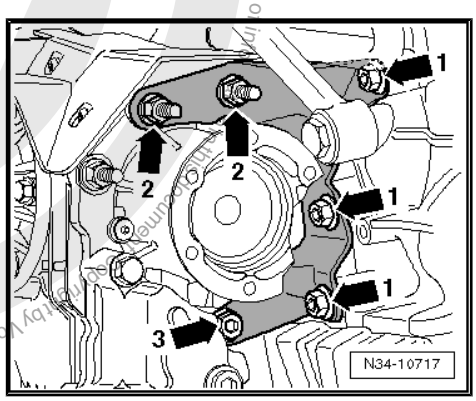

Special tools and workshop equipment required

♦ Socket And Extended Bit - T10107A-

♦

♦ Torque Wrench 1331 5-50Nm - VAG1331-

♦ Shop Crane - Drip Tray - VAS6208-

♦ Allocate the grease for gearshift mechanism. Refer to the Parts Catalog.

Protected by copyright. Copying for private or commercial purposes, in part or in whole, is not permitted unless authorised by Volkswagen AG. Volkswagen AG does not guarantee or accept any liability with respect to the correctness of information in this document.

Note

Transmission mount from approximately 11/2009: Bevel Box, Removing and installing. Refer to
⇒ "9.3 Bevel Box, Removing and Installing, Vehicles with a Turbo Diesel Engine with a Particulate Filter, through Approximately 11/2009", page 211 .

9.2.1 Bevel Box, Removing

Check whether a breather tube -arrow- is mounted on the bevel gear.

– Remove the entire air filter housing if necessary. Refer to ⇒ Rep. Gr. 23 ; Diesel Direct Injection System; Air Filter Housing, Removing and Installing .

To remove breather tube, shift mechanism must be removed from transmission:

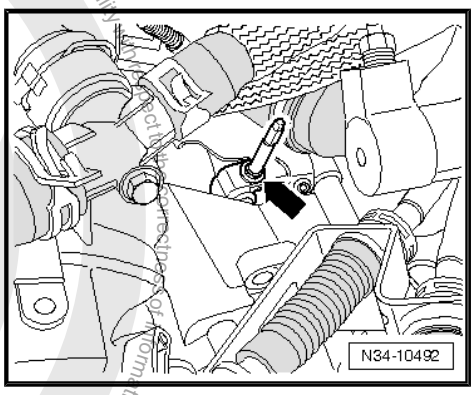

– Remove the shift cable lock washer -3- from the transmission shift lever -1- and remove the cable from the pin -arrow-.

Metal Relay Lever

– Remove the selector cable lock washer -4- from the relay lever -2- and remove the cable from the pin -arrow-.

Plastic Relay Lever

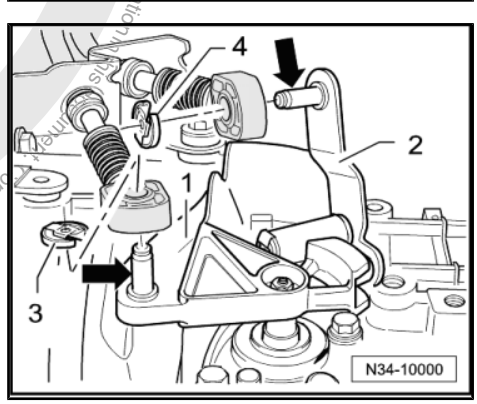

– Remove the cable retainer from the selector cable.

• To avoid damage to the selector cable, the cable retainer must be disconnected from the selector lever before removal.

– Pull the securing mechanism all the way forward in direction of -arrow 1- and then unlock to the left in direction of -arrow 2-.

– Press the relay lever forward (in the direction of -arrow 3-).

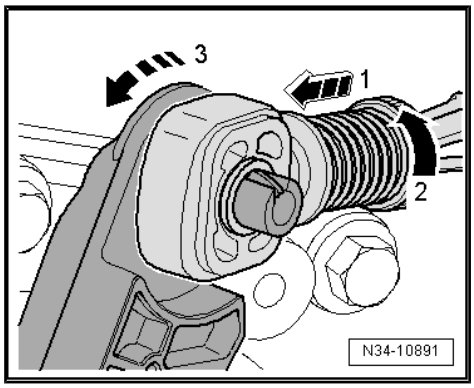

– Remove the cable bracket from the transmission -arrows-, tie up to the side.

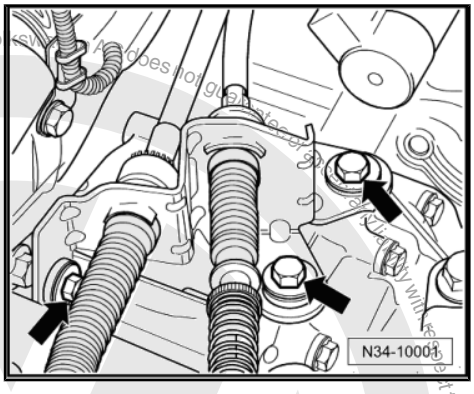

– Remove the breather tube from the bevel gear -arrow-.

Continuation for All

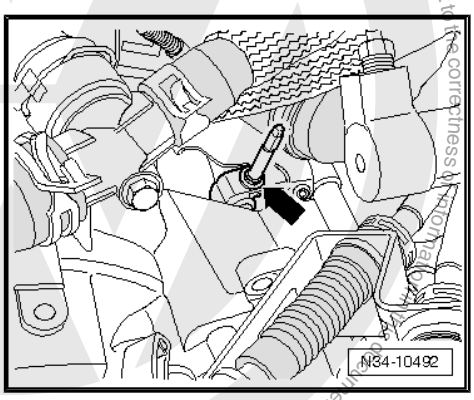

The right driveshaft must be removed later in the procedure.

– With the vehicle still standing on its wheels, loosen the right front collar bolt -arrow- a maximum 90°, otherwise the wheel bearing will get damaged. Refer to ⇒ Suspension, Wheels, Steering; Rep. Gr. 40 ; Drive Axles, Removing and Installing .

– Raise the vehicle.

– Remove the noise insulation. Refer to ⇒ Body Exterior; Rep. Gr. 50 ; Noise Insulation .

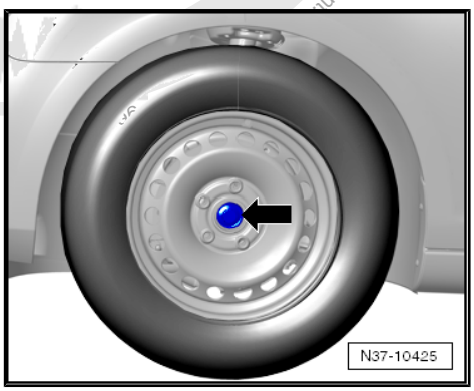

– Disconnect the exhaust system at the clamping sleeve and remove the exhaust system bracket from the subframe -arrows-.

– Tie up the front exhaust pipe.

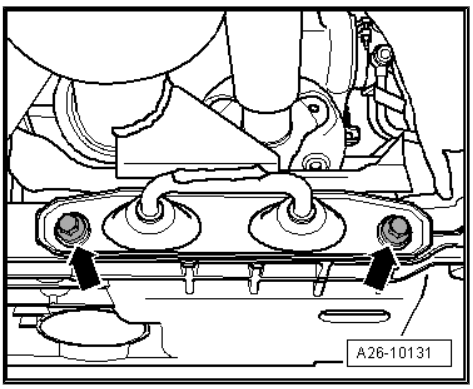

Protected by copyright. Copying for private or commercial purposes, in part or in whole, is not permitted unless authorised by Volkswagen AG. Volkswagen AG does not guarantee or accept any liability with respect to the correctness of information in this document.

– Mark the position of the driveshaft with the flexible disk to the bevel gear flange.

– Remove the driveshaft and flexible disk from the bevel gear flange shaft -arrows-.

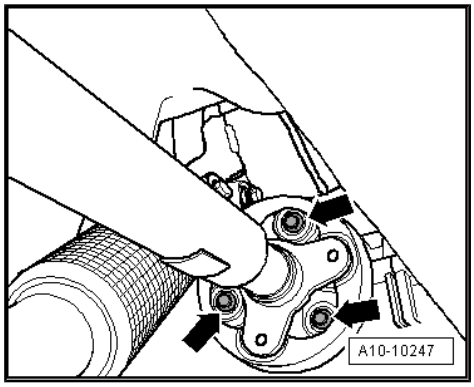

– Disconnect the connector -1- from the Oil Level Thermal Sensor - G266- .

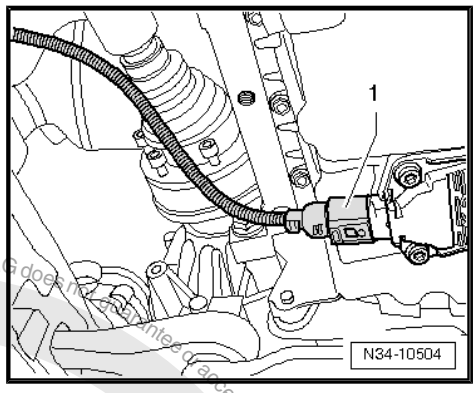

– Remove the pendulum support from the transmission.

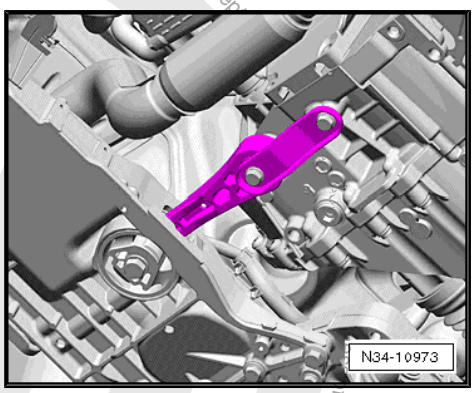

Note

After loosening the pendulum support bolts, the engine/transmission assembly swings forward slightly (toward the front end). Ensure that the sealing ring -arrow- in the flange of the driveshaft is not damaged during removal and installation.

– Press the engine/transmission assembly slightly forward (toward the front end) and pull the driveshaft off of the bevel gear.

– Lift the driveshaft and secure it.

– Remove the left and right coupling rods from the stabilizer bar.

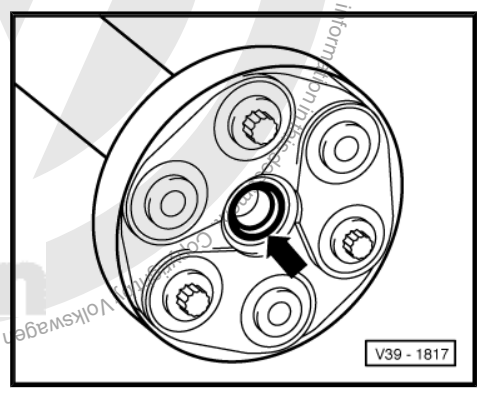

Protected by copyright. Copying for private or commercial purposes, in part or in whole, is not permitted unless authorised by Volkswagen AG. Volkswagen AG does not guarantee or accept any liability with respect to the correctness of information in this document. Copyright by Volkswagen AG.

– Remove the nuts -arrows- for the ball joint on the control arm.

– Secure the subframe before removing. Refer to ⇒ Suspension, Wheels, Steering; Rep. Gr. 40 ; Subframe; Subframe, Securing .

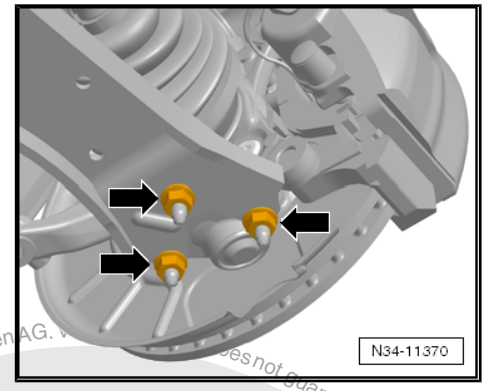

– Remove subframe with pendulum support, stabilizer bar, brackets, steering gear and control arms. Refer to ⇒ Suspension, Wheels, Steering; Rep. Gr. 40 ; Subframe .

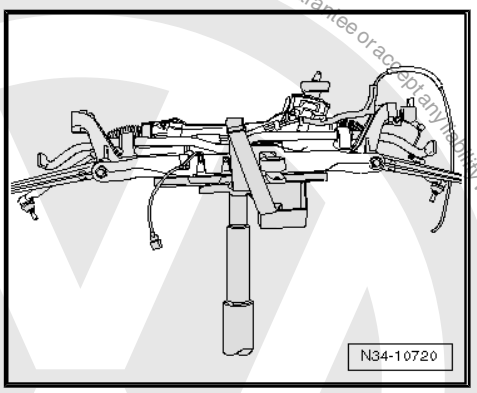

– Remove the support -A- (if equipped). Refer to ⇒ Rep. Gr. 26 ; Exhaust System .

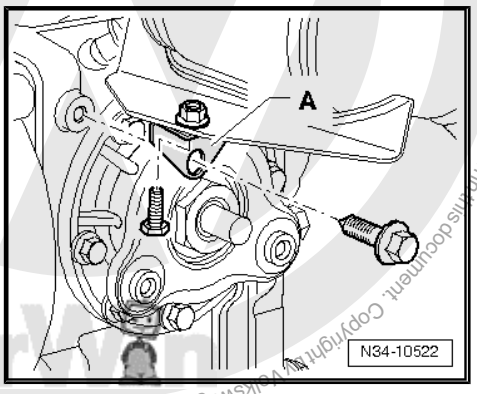

– Remove the right drive axle heat shield from bevel box -arrows-.

– Remove the right drive axle. Refer to ⇒ Suspension, Wheels, Steering; Rep. Gr. 40 ; Drive Axles, Removing and Installing .

– Place the Drip Tray for example Shop Crane - Drip Tray - VAS6208- under the transmission.

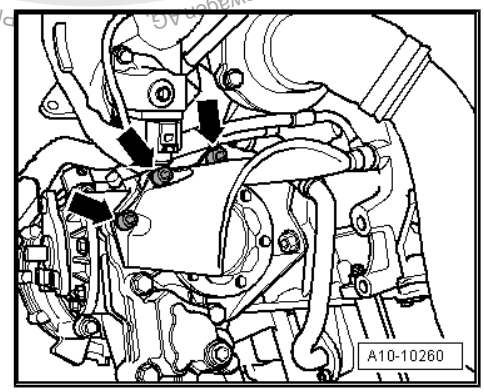

Protected by copyright. Copying for private or commercial purposes, in part or in whole, is not permitted unless authorised by Volkswagen AG. Volkswagen AG does not guarantee or accept any liability with respect to the correctness of information in this document. Copyright by Volkswagen AG.

– Drain the fluid from the bevel box -A-.

– Remove the right flange shaft bolt -arrow- with the Socket And Extended Bit - T10107A- and install two bolts in the flange and counterhold the flange shaft with the pry bar.

– Finally, insert and tighten new bolts -A-.

Bolt M10 X 1 = 15 Nm

Bolt M20 X 1.5 = 60 Nm

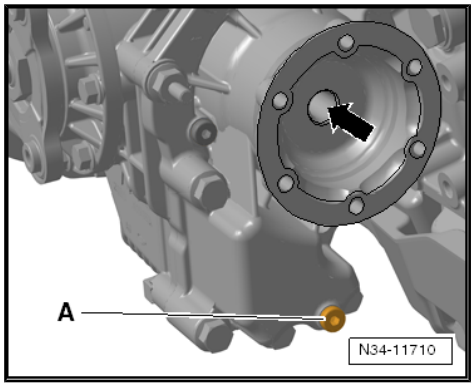

– Attach the Puller - Flanged Shaft - T10037- to the flange shaft.

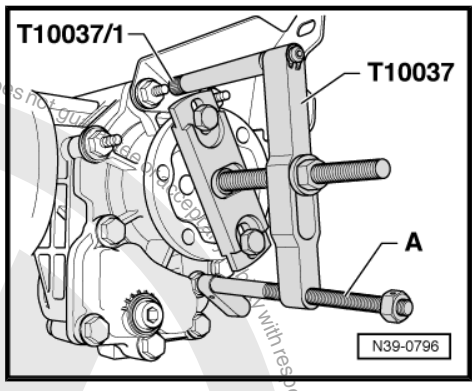

Note

To remove right flange shaft, use Seal Installer - Crankshaft - T10037- to avoid damaging the bearing on flange shaft.

– Place a spacer (for example, Press Piece - Bushing - VW434-) between the transmission support and the Stub Shaft counterhold Tool - Knurled Nut - T10371/1- .

– Align the Puller - Flanged Shaft - T10037- parallel to the flange using the Spindle -A-.

– Pull out the right flange shaft.

– Seal the bevel box with a Cover Cap - T10460- .

– Remove the engine cover.

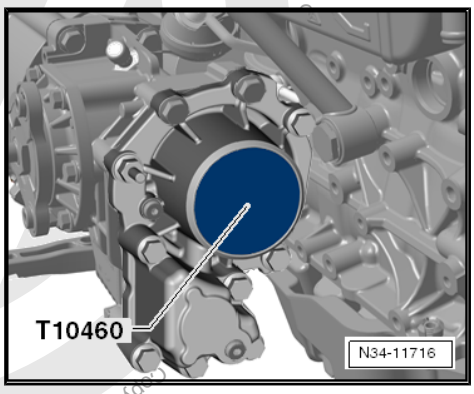

– Remove the upper particulate filter -A- from the engine -arrow 1- and from under the turbocharger -arrow 2-. Refer to ⇒ Rep. Gr. 26 ; Exhaust System .

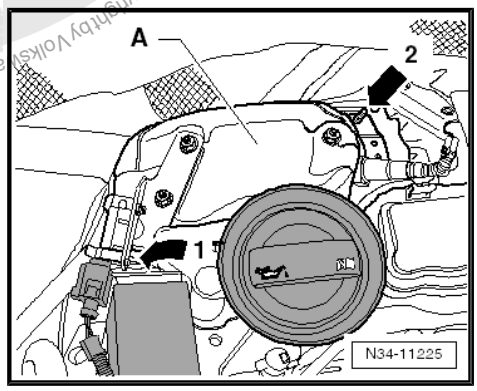

Protected by copyright. Copying for private or commercial purposes, in part or in whole, is not permitted unless authorised by Volkswagen AG. Volkswagen AG does not guarantee or accept any liability with respect to the correctness of information in this document. Copyright by Volkswagen AG.

– Loosen the nuts -1- and remove the nuts -2- to remove the particulate filter bracket from the engine.
– Then tie the particulate filter to the plenum chamber bulkhead.
– Remove the turbocharger support. Refer to ⇒ Rep. Gr. 21 .
– Remove the EGR cooler (do not remove the coolant hoses) ⇒ Rep. Gr. 26 ; EGR System .

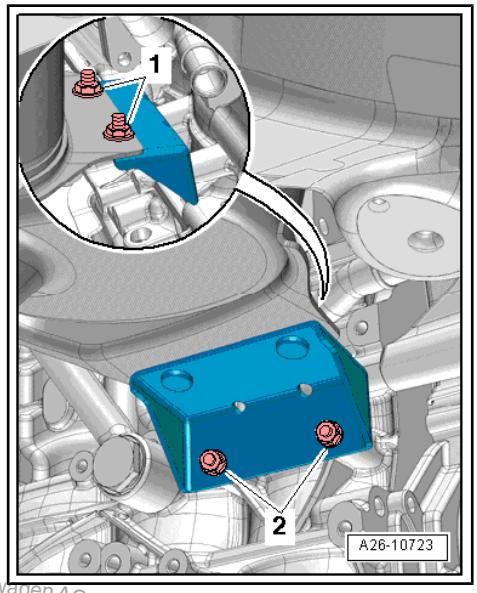

– Remove the transmission mount bolts on the engine and bevel gear -arrows 1-, -arrows 2- and -arrow 3-.
– Remove the transmission mount.

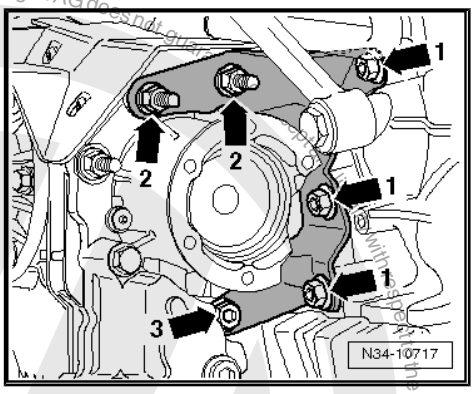

– Remove the lower bevel gear mounting bolts -arrows- at the manual transmission.

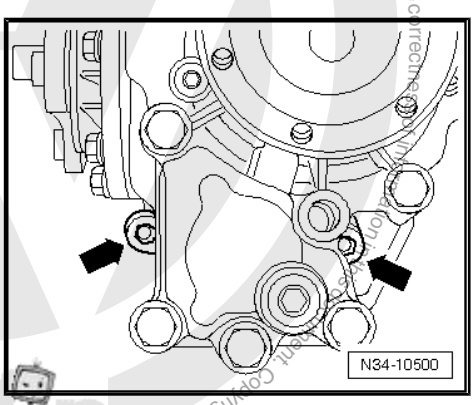

– Remove upper bevel box mounting bolt at manual transmission:

A heat shield -arrow A- is installed on the upper side of the bevel box on some vehicles.

The bolt -arrow B- is accessible from under the heat shield.

The bolt -arrow C- is accessible from above the heat shield.

– Carefully press bevel box off manual transmission while protecting it against falling through.
– Remove bevel box.

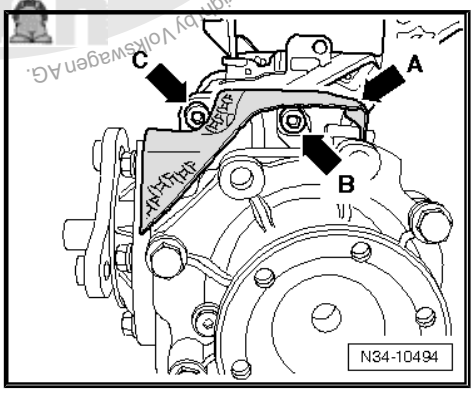

Protected by copyright. Copying for private or commercial purposes, in part or in whole, is not permitted unless authorised by Volkswagen AG. Volkswagen AG does not guarantee or accept any liability with respect to the correctness of information in this document. Copyright by Volkswagen AG.

Volkswagen AG. Volkswagen AG does not guarantee or accept any liability for the correctness of information in this document. Copyright by Volkswagen AG. Protected by copyright. Copying for private or commercial purposes, in part or in whole, is not permitted unless authorised by Volkswagen AG.

– If replacing the bevel box, check whether the heat shield -A- must be removed.

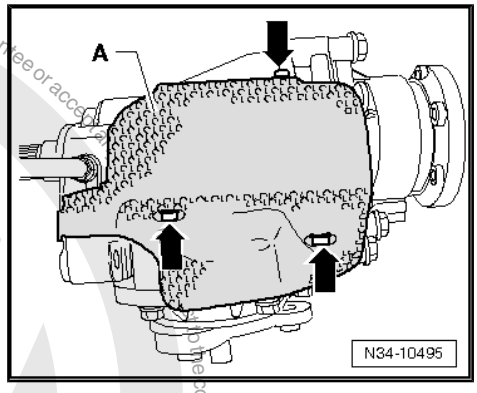

9.2.2 Bevel Box, Installing

Install in reverse order of removal while. Note the following:

– With the manual transmission installed, lubricate differential splines with Grease for Clutch Disc Shaft Splines - G 000 100- .

– If the bevel box is being replaced, then install heat shield -A-.

– Tighten the mounting bolts -arrows- to 5 Nm.

– Slide on bevel box completely on manual transmission, while doing this, join splines of input shaft/bevel box centrally with differential.

– With proper tooth position and central guiding, bevel box slips up to stop against manual transmission.

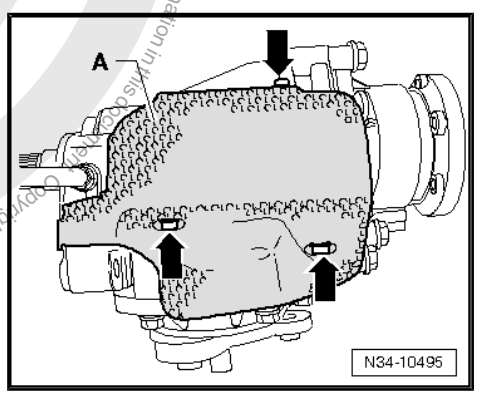

A heat shield -arrow A- is installed on the upper side of the bevel box on some transmissions.

– Upper bevel box mounting bolts at manual transmission are accessible as follows:

The bolt -arrow B- is accessible from under the heat shield.

The bolt -arrow C- is accessible from above the heat shield.

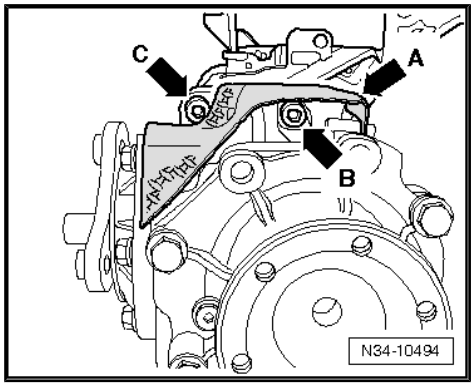

Note

Do not pull bevel box with mounting bolts against the transmission. Otherwise bevel box is canted and mounting eyelets can break off.

– Attach the bevel gear transmission mount to the engine and bevel gear. Follow the tightening sequence when installing the bolts -arrows 1, 2, and 3-. Refer to ⇒ “9.2.3 Tightening Specifications”, page 210 .

– Install the turbocharger support. Refer to ⇒ Rep. Gr. 21 .

– Attach the particulate filter with the particulate filter bracket to the engine. Refer to ⇒ Rep. Gr. 26 .

– Install the EGR cooler (do not open the coolant system) ⇒ Rep. Gr. 26 ; EGR System .

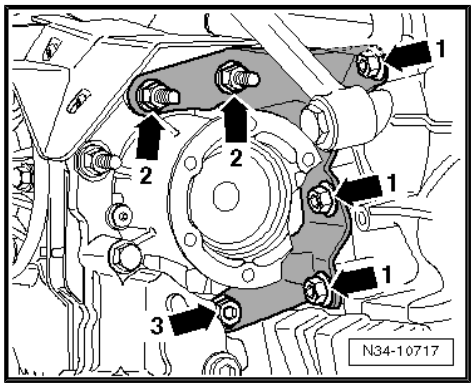

– Install the support -A-, if equipped. Refer to ⇒ Rep. Gr. 26 .

– Carefully drive in the left flange shaft. While doing so turn the flange shaft so that the bearing does not get damaged.

– Install flange shaft with a screw and tighten to tightening specification -item 13- ⇒ Item 13 (page 401) .

– Install the right drive axle. Refer to ⇒ Suspension, Wheels, Steering; Rep. Gr. 40 ; Drive Axles, Removing and Installing .

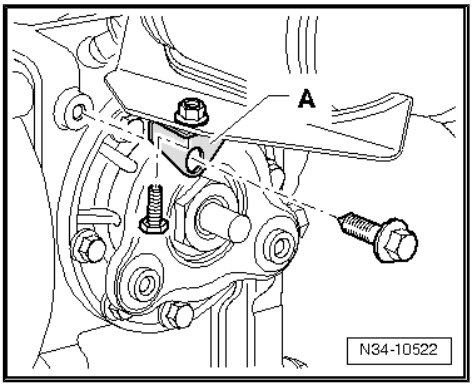

– Attach the right drive axle heat shield to the bevel box -arrows- and tighten it to the tightening specification. Refer to ⇒ “9.1.3 Tightening Specifications”, page 201 .

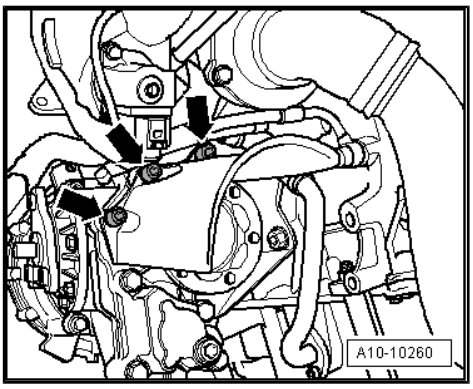

– Install subframe with pendulum support, stabilizer bar, brackets, steering gear and control arms. Refer to ⇒ Suspension, Wheels, Steering; Rep. Gr. 40 ; Subframe .

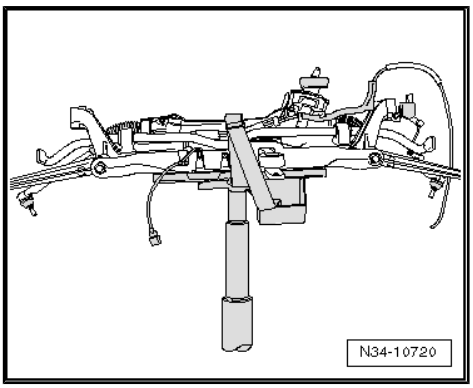

– Attach the driveshaft with the flexible disc to the bevel box flange -arrows-. Refer to ⇒ Rear Final Drive; Rep. Gr. 39 .

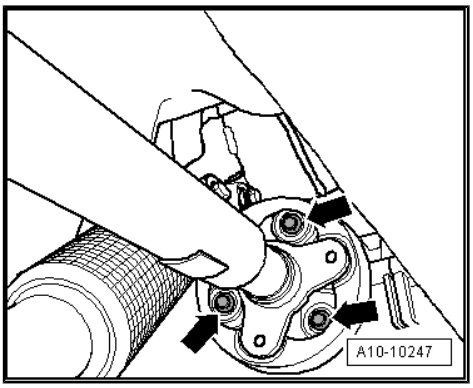

Protected by copyright. Copyright for private or commercial purposes, in part or in whole, is not permitted unless authorised by Volkswagen AG. Volkswagen AG does not guarantee or accept any liability with respect to the correctness of information in this document. Copyright by Volkswagen AG.

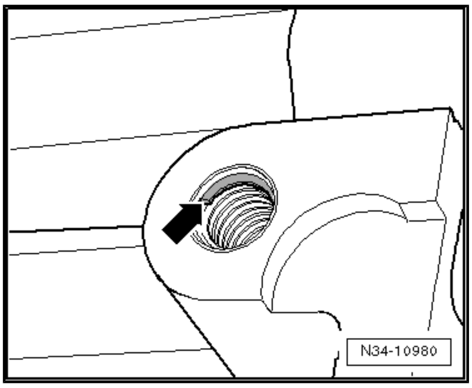

Note

- *The holes for the pendulum support in transmissions from 05/28/2007 have threaded inserts (for example “Heli Coil”).*
- *Characteristic: there is a collar on the first thread -arrow-.*
- *Pay attention to the corresponding bolts and tightening specifications. Refer to ⇒ Suspension, Wheels, Steering; Rep. Gr. 40 ; Subframe; Overview - Subframe .*

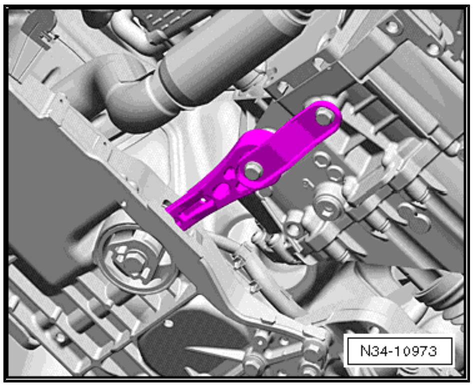

– Attach the pendulum support to the transmission. Refer to ⇒ Suspension, Wheels, Steering; Rep. Gr. 40 ; Subframe; Overview - Subframe .

– Assemble the exhaust system and then attach the exhaust system bracket it to the subframe. Refer to ⇒ Rep. Gr. 26 .

– Check the gear oil in the bevel box. Refer to ⇒ “10 Axle Oil in Bevel Box, Checking or Adding”, page 218 .

– Check transmission fluid level inside the manual transmission. Refer to ⇒ “8 Transmission Fluid, Checking”, page 192 .

– Install the noise insulation. Refer to ⇒ Body Exterior; Rep. Gr. 50 ; Noise Insulation .

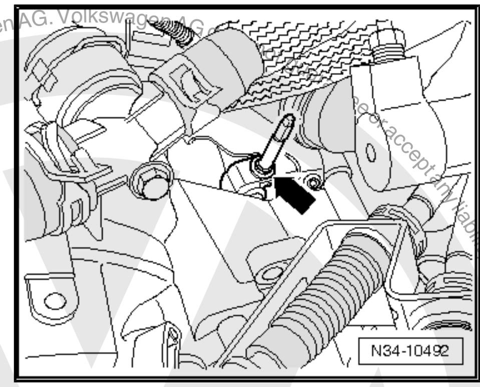

– If equipped, install the breather tube -arrow- in the bevel gear and tighten to 10 Nm.

If shift mechanism was removed from transmission:

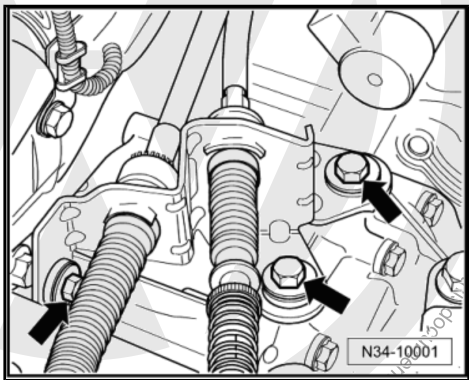

– Attach the cable mounting bracket to the transmission and tighten the bolts and nuts -arrows- to the tightening specification -item 6- ⇒ Item 6 (page 86) and -item 10- ⇒ Item 10 (page 86) .

– Install and adjust shift mechanism. Refer to ⇒ “1.9 Selector Mechanism, Removing and Installing”, page 92 .

– Install complete air filter housing. Refer to ⇒ Rep. Gr. 23 ; Diesel Direct Injection System; Air Filter Housing, Removing and Installing .

– Check the headlamp adjustment if the vehicle has a Left Front Level Control System Sensor - G78- . Refer to ⇒ Electrical Equipment; Rep. Gr. 94 ; Headlamps; Headlamp, Adjusting .

9.2.3 Tightening Specifications

Bevel box to manual transmission ♦ Replace the bolts.	⇒ Item 17 (page 235)

Install the Transmission Mount

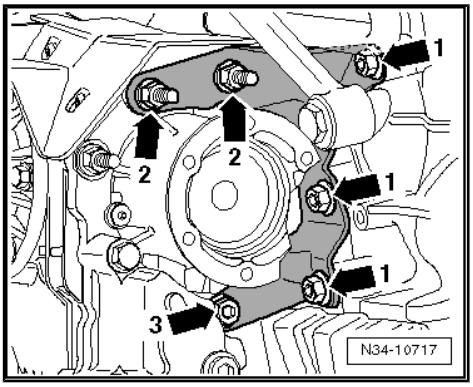

Allocation of bolts

Item	Bolt	Quantity
1	M10 x 21	3
2	M10 x 45	2
3	M10 x 62	1

The following assembly sequence must be followed when installing the transmission mount:

– Hand-tighten all bolts.

– Tighten the bolts -arrows 2 and 3- to 40 Nm.

– Tighten the bolts -arrows 1- to 40 Nm.

9.3 Bevel Box, Removing and Installing, Vehicles with a Turbo Diesel Engine with a Particulate Filter, through Approximately 11/2009

⇒ "9.3.1 Bevel Box, Removing", page 211

⇒ "9.3.2 Bevel Box, Installing", page 215

⇒ "9.3.3 Tightening Specifications", page 217

Note

Transmission mount through approximately 10/2009; Bevel box, Removing and installing. Refer to
⇒ "9.2 Bevel Box, Removing and Installing, Vehicles with a Turbo Diesel Engine with a Particulate Filter, through approximately 10/2009", page 201 .

Identifying Feature

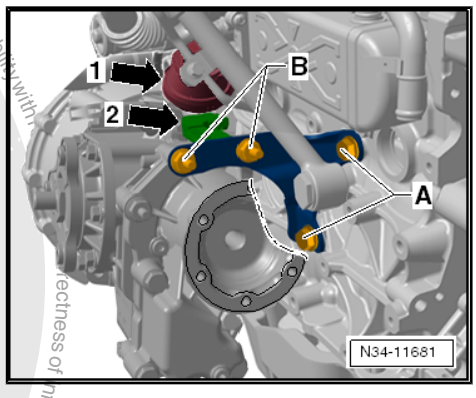

After 11/2009, a »Brace« -arrow 2- Is Installed Under the Vacuum Diaphragm -arrow 1- At the top of the Transmission Support (Gradual Introduction).

The Transmission Mount Is Connected to the Engine and Bevel Gear with the Bolts -A and B-.

Special tools and workshop equipment required

- Puller - Flanged Shaft - T10037-
- Socket And Extended Bit - T10107A-
- Cover Cap - T10460-
- Shop Crane - Drip Tray - VAS6208-

9.3.1 Bevel Box, Removing

– Remove the noise insulation under the engine/transmission assembly. Refer to ⇒ Body Exterior; Rep. Gr. 50 ; Noise Insulation .

– Remove the right driveshaft heat shield from bevel box -arrows-.

– Remove the right drive axle. Refer to ⇒ Suspension, Wheels, Steering; Rep. Gr. 40 ; Drive Axles, Removing and Installing .

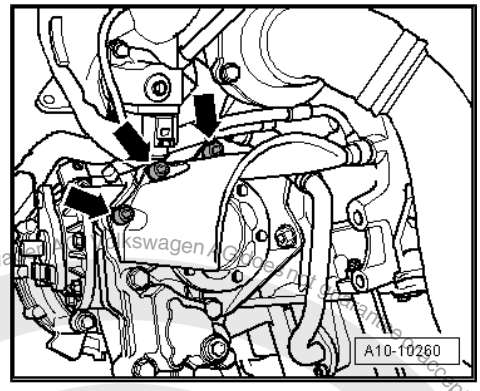

– Mark the position of the drive axle with the flexible disk with respect to the bevel gear flange with paint.

– Remove the driveshaft from the bevel box -arrows-. Refer to ⇒ Rear Final Drive; Rep. Gr. 39 .

– Slide the front driveshaft pipe all the way back.

– Place a cloth on the subframe to prevent damaging the paint on the driveshaft.

– Position the driveshaft on the subframe.

– Remove the engine cover.

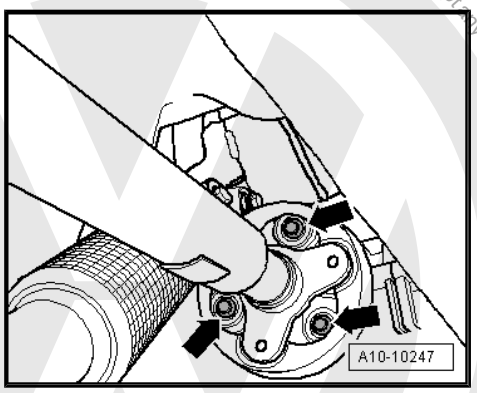

– Remove the upper particulate filter -A- from the engine -arrow 1- and from under the turbocharger -arrow 2-. Refer to ⇒ Rep. Gr. 26 .

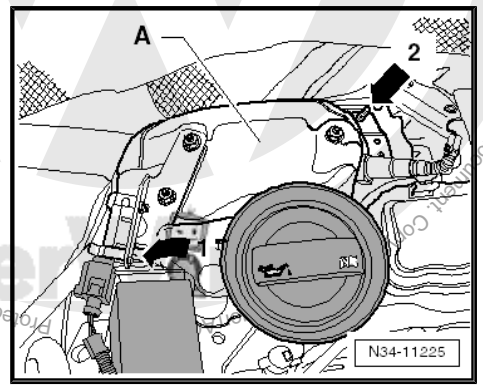

– Loosen the nuts -1- and remove the nuts -2- to remove the particulate filter bracket from the engine.

– Then tie the particulate filter to the plenum chamber bulkhead.

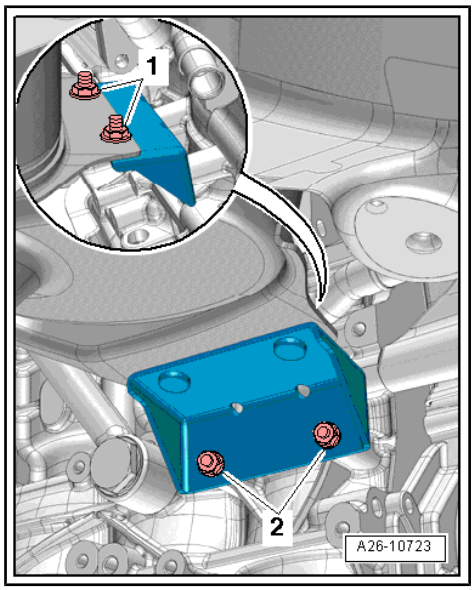

Protected by copyright. Copying for private or commercial purposes, in part or in whole, is not permitted unless authorised by Volkswagen AG. We do not accept any liability with respect to the correctness of information in this document. Copyright by Volkswagen AG

Protected by copyright. Copying for private or commercial purposes, in part or in whole, is not permitted unless authorised by Volkswagen AG. Volkswagen AG does not guarantee or accept any liability with respect to the correctness of information. Copyright by Volkswagen AG.

– Remove the exhaust system bracket from the subframe -arrows-.

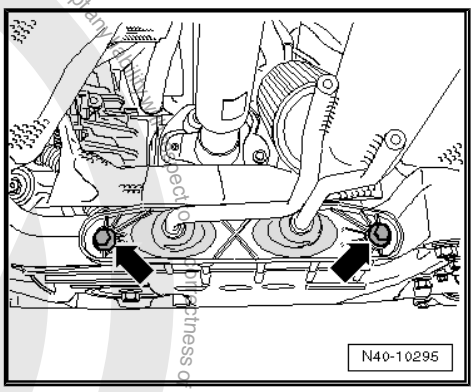

– Remove the pendulum support from the transmission, bolt -1- and bolt -2-.

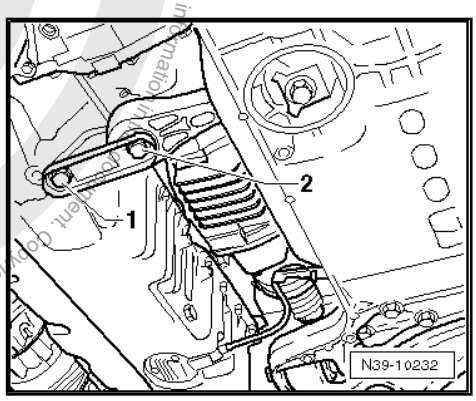

– Press the engine/transmission sub-assembly slightly toward the front end and secure it in this position with a suitable wood block -A-.

– Place the Drip Tray for example Shop Crane - Drip Tray - VAS6208- under the transmission.

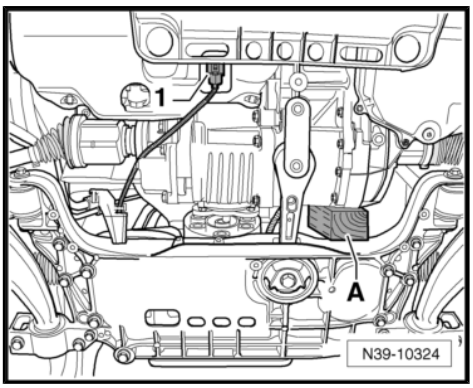

– Drain the fluid from the bevel box -A-.

– Install the new drain plug and tighten it to 15 Nm.

– Remove the right flange shaft bolt -arrow- with the Socket And Extended Bit - T10107A- and install two bolts in the flange and counterhold the flange shaft with the pry bar.

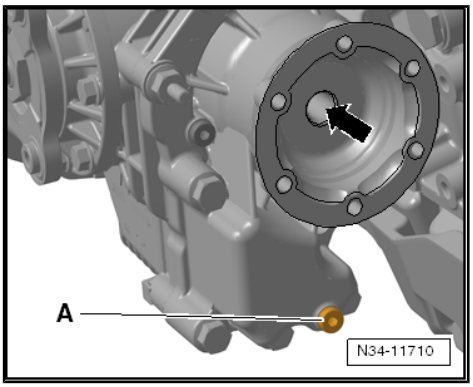

– Attach the Puller - Flanged Shaft - T10037- to the flange shaft.

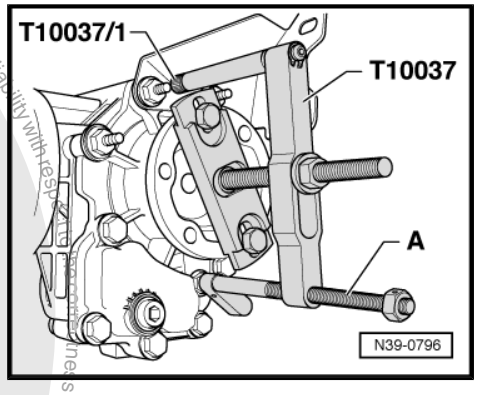

Note

To remove right flange shaft, use Puller - Flanged Shaft - T10037- to avoid damaging the bearing on flange shaft.

– If necessary, place a spacer (for example, Press Piece - Bushing - VW434-) between the transmission support and the Stub Shaft counterhold Tool - Knurled Nut - T10371/1- .

– Align the Puller - Flanged Shaft - T10037- parallel to the flange using the Spindle -A-.

– Pull out the right flange shaft.

– Seal the bevel box with a Cover Cap - T10460- .

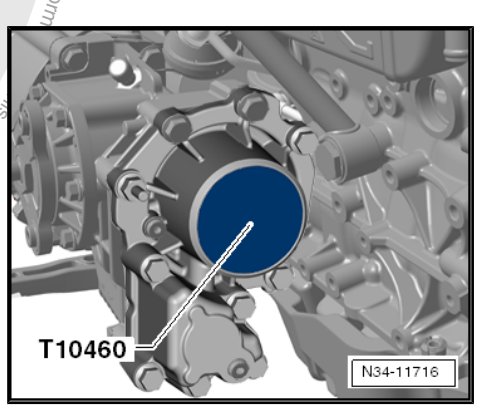

– Remove the turbocharger support. Refer to ⇒ Rep. Gr. 21 .

– Remove the transmission support bolts -A and B- from the engine and the bevel box.

– Remove the transmission mount.

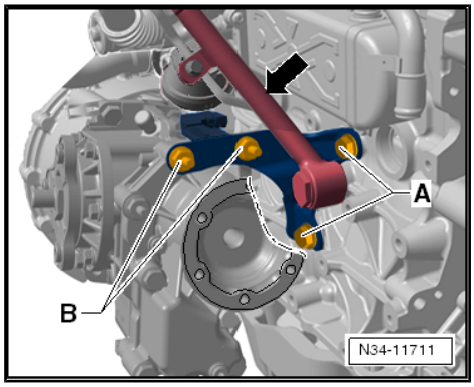

– Remove the upper bevel box bolts -arrows- on the manual transmission.

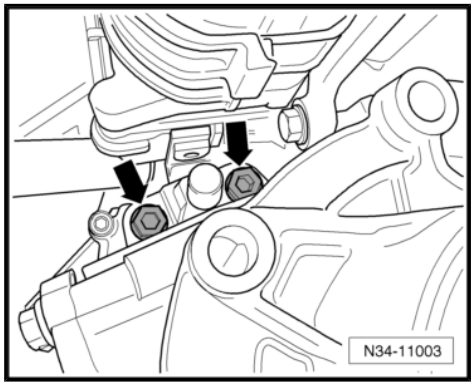

Protected by copyright. Copying for private or commercial purposes, in part or in whole, is not permitted unless authorised by Volkswagen AG. Volkswagen AG does not guarantee or accept any liability with respect to the correctness of information in this document. Copyright by Volkswagen AG.

– Remove the lower bevel box bolts -arrows- on the manual transmission.

– Carefully push the bevel box off the manual transmission and remove it.

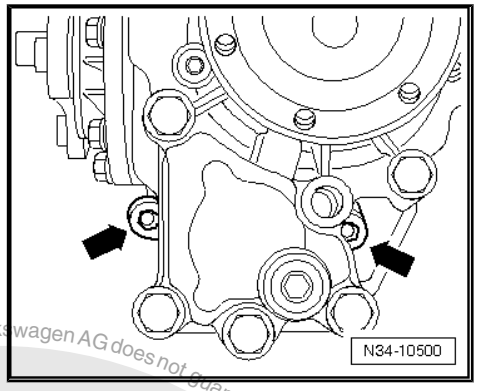

9.3.2 Bevel Box, Installing

Install in reverse order of removal while. Note the following:

Install the bevel box with the flange shaft removed.

– Coat the splines on the manual transmission differential with Grease For Clutch Disc Shaft Splines - G 000 100- .

– Slide on bevel box completely on manual transmission, while doing this, join splines of input shaft/bevel box centrally with differential.

– With proper tooth position and central guiding, bevel box slips up to stop against manual transmission.

Note

Do not pull bevel box with mounting bolts against the transmission. Otherwise bevel box is canted and mounting eyelets can break off.

– Install the upper bolts (-arrows-) that attach the bevel box to the manual transmission and tighten them to 40 Nm + 90°.

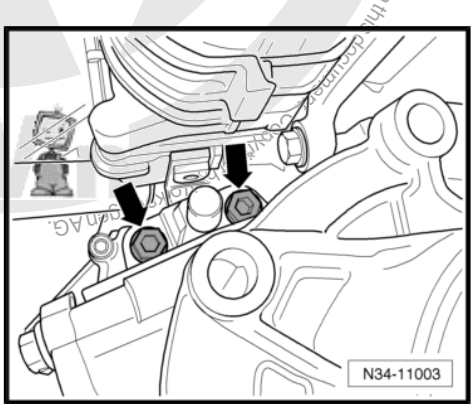

– Install the lower bolts -arrows- that attach the bevel box to the manual transmission and tighten them to 40 Nm + 90°.

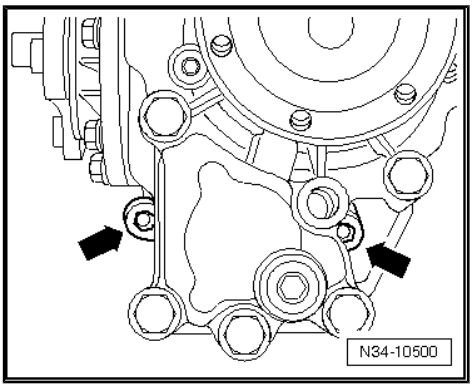

Protected by copyright. Copying for private or commercial purposes, in part or in whole, is not permitted unless authorised by Volkswagen AG. Volkswagen AG does not guarantee or accept any liability with respect to the correctness of information in this document.

– Fasten the bevel gear transmission mount to the engine and bevel gear while observing the tightening sequence for the bolts -A and B-. Refer to ⇒ “9.3.3 Tightening Specifications”, page 217 .

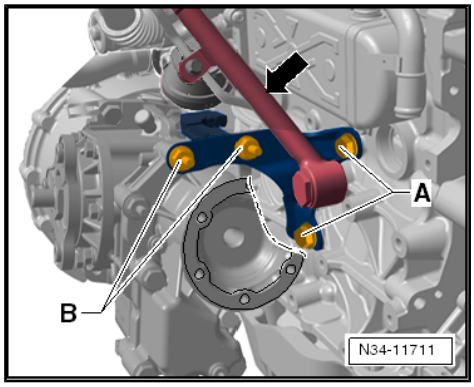

– Install the turbocharger support. Refer to ⇒ Rep. Gr. 21 .

– Attach the particulate filter with the particulate filter bracket to the engine. Refer to ⇒ Rep. Gr. 26 .

– Carefully drive in the left flange shaft. While doing so turn the flange shaft so that the bearing does not get damaged.

– Install flange shaft with a screw and tighten to tightening specification -item 13- ⇒ Item 13 (page 401) .

– Install the right drive axle. Refer to ⇒ Suspension, Wheels, Steering; Rep. Gr. 40 ; Drive Axles, Removing and Installing .

– Fill the bevel box with gear oil. Refer to ⇒ “10 Axle Oil in Bevel Box, Checking or Adding”, page 218 .

– Attach the right drive axle heat shield to the bevel box -arrows- and tighten it to the tightening specification. Refer to ⇒ “9.1.3 Tightening Specifications”, page 201 .

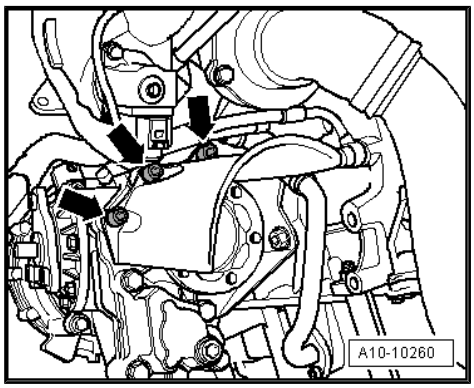

– Attach the driveshaft with the flexible disc to the bevel box flange -arrows-. Refer to ⇒ Rear Final Drive; Rep. Gr. 39 .

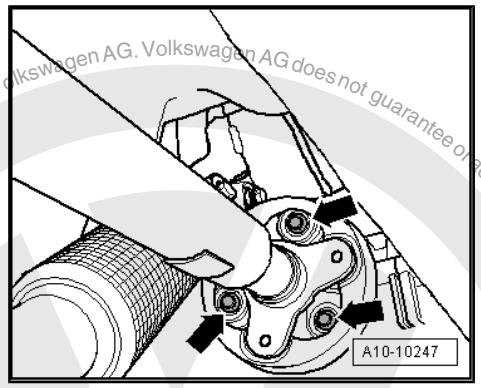

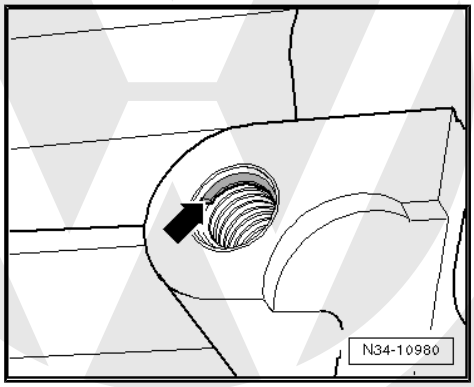

Note

- *The holes for the pendulum support in transmissions from 05/28/2007 have threaded inserts (for example “Heli Coil”).*
- *Characteristic: there is a collar on the first thread -arrow-.*
- *Pay attention to the corresponding bolts and tightening specifications. Refer to ⇒ Suspension, Wheels, Steering; Rep. Gr. 40 ; Subframe; Overview - Subframe .*

Protected by copyright. Copying for private or commercial purposes, in part or in whole, is not permitted unless authorised by Volkswagen AG. Volkswagen AG does not guarantee or accept any liability with respect to the correctness of information in this document. Copyright by Volkswagen AG.

Protected by copyright. Copying for private or commercial purposes, in part or in whole, is not permitted unless authorised by Volkswagen AG. Volkswagen AG does not guarantee or accept any liability with respect to the correctness of information in this document.

– Attach the pendulum support to the transmission. Refer to ⇒ Suspension, Wheels, Steering; Rep. Gr. 40 ; Subframe; Overview - Subframe .

– Assemble the exhaust system and then attach the exhaust system bracket it to the subframe. Refer to ⇒ Rep. Gr. 26 .

– Install the noise insulation. Refer to ⇒ Body Exterior; Rep. Gr. 50 ; Noise Insulation .

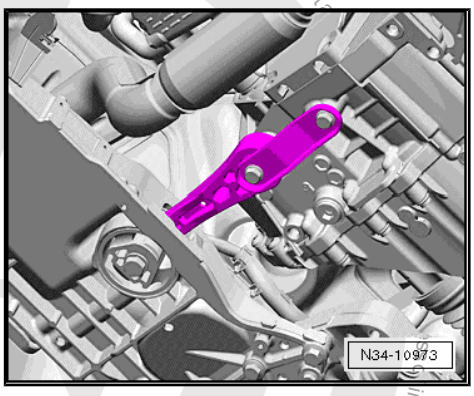

9.3.3 Tightening Specifications

Bevel box to manual transmission ⇒ Item 17 (page 235)

♦ Replace the bolts.

Allocation of the transmission support bolts to the engine and bevel box

Item	Bolt	Quantity
A	M10 x 21	2
B	M10 x 45	2

– Hand-tighten all bolts.

– Tighten the bolts -B- to 40 Nm.

– Tighten the bolts -A- to 40 Nm.

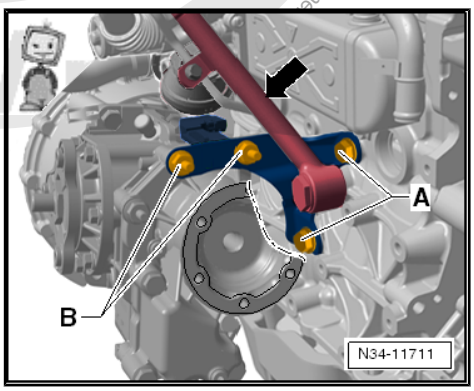

10 Axle Oil in Bevel Box, Checking or Adding

⇒ “10.1 Gear Oil in Bevel Box, Checking”, page 218

⇒ “10.2 Gear Oil in Bevel Box, Filling”, page 219

Special tools and workshop equipment required

- Torque Wrench 1331 5-50Nm - VAG1331-
- Used Oil Collection and Extraction Unit - SMN372500-
- Charging Device For Haldex Coupling 2 - VAS6291A-
- Charging Device For Haldex Coupling 2 - Adapter 3 - VAS6291/3-
- It is necessary to use the Oil Filler - Adapter 6 - VAS6262/6- on some oil containers.

Bevel Box is Attached to the Side of Manual Transmission and has A Separate Self-Contained Oil System.

Bevel box gear oil. Refer to the Parts Catalog.

Check transmission fluid level inside the manual transmission. Refer to ⇒ “8 Transmission Fluid, Checking”, page 192 .

10.1 Gear Oil in Bevel Box, Checking

Requirements

- Bevel box must be in the installation position.

– Remove the noise insulation. Refer to ⇒ Body Exterior; Rep. Gr. 50 ; Noise Insulation .

– Remove the right drive axle heat shield from bevel box -arrows-.

– Place the Used Oil Collection and Extraction Unit - SMN372500- under the bevel box.

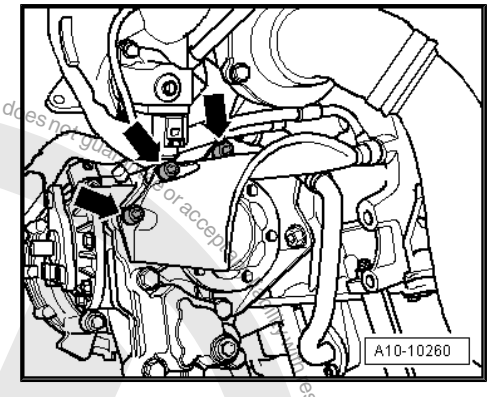

Note

Cover area below oil filler bolt -arrow- with a cloth.

– Remove the oil filler plug -arrow- in the bevel box.

The oil filler plug -arrow- must be replaced.

Oil level is correct if bevel box is filled with oil as far as bottom edge of oil fill hole.

If oil comes in contact with bevel box, remove the bevel box carefully.

– Add gear oil if necessary. Refer to ⇒ “10.2 Gear Oil in Bevel Box, Filling”, page 219 .

– Install the new oil filler plug -arrow-.

– Tighten the bolt to the specification. Refer to ⇒ “10.2.1 Tightening Specification”, page 221 .

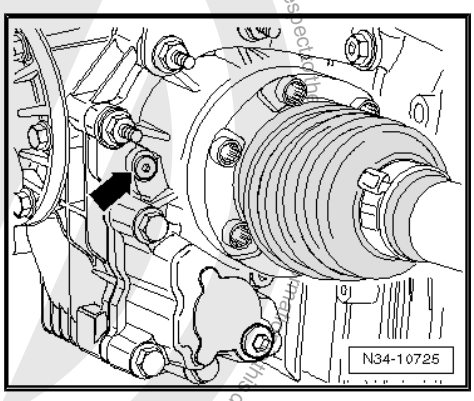

Protected by copyright. Copying for private or commercial purposes, in part or in whole, is not permitted unless authorised by Volkswagen AG. Volkswagen AG does not guarantee or accept any liability with respect to the correctness of information in this document. Copyright by Volkswagen AG.

10.2 Gear Oil in Bevel Box, Filling

Requirements

- Bevel box must be in the installation position.

– Remove the right drive axle heat shield from bevel box -arrows-.

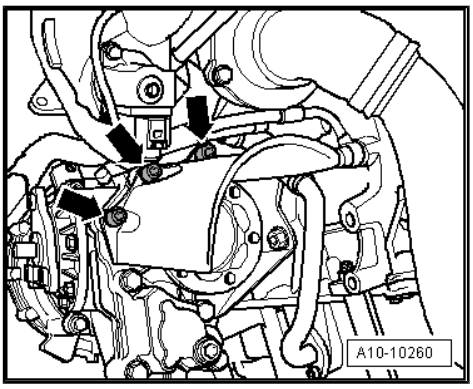

– Use the Charging Device For Haldex Coupling 2 - VAS6291A- to fill.

– Route the Charging Device For Haldex Coupling 2 - VAS6291A- hose through the engine compartment.

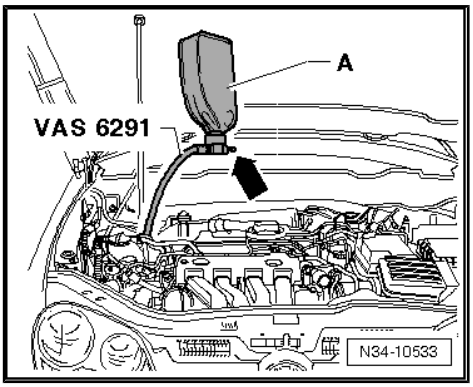

– If the vehicle has a particulate filter -A-, guide the hose from the Charging Device For Haldex Coupling 2 - VAS6291- past the filter on the right side.

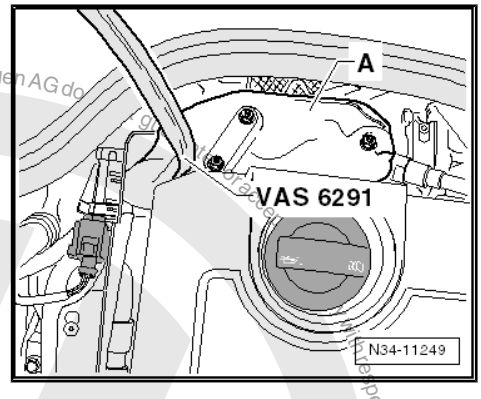

Note

Cover area below oil filler bolt -arrow- with a cloth.

– Place the Used Oil Collection and Extraction Unit - SMN372500- under the bevel box.

– Remove the oil filler plug -arrow- in the bevel box.

– Disconnect the Charging Device For Haldex Coupling 2 - Adapter 3 - VAS6291/3- and the elbow -A-.

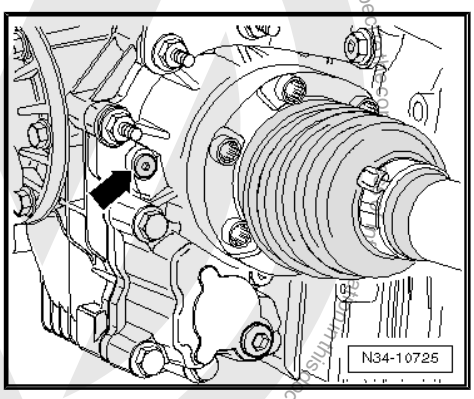

Protected by copyright. Copying for private or commercial purposes, in part or in whole, is not permitted unless authorised by Volkswagen AG. Volkswagen AG does not guarantee or accept any liability with respect to the correctness of information in this document. Copyright by Volkswagen AG.

– Install the Adapter to the stop.

– Attach the elbow -A- to the Adapter .

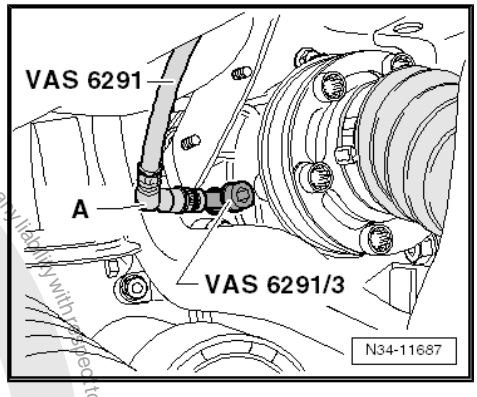

– Make sure that the valve -arrow- is closed.

– Install the oil container -A- on the Charging Device For Haldex Coupling 2 - VAS6291- .

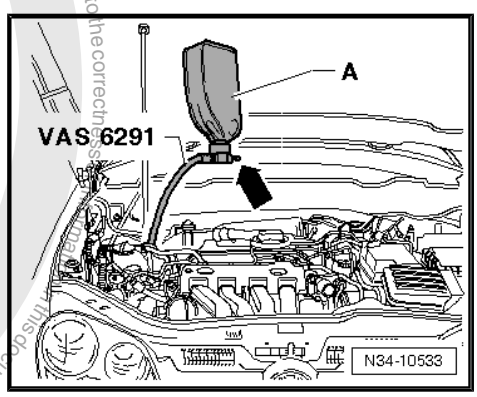

Note

It is necessary to use the Wheel Alignment System - Wheel Adapter Extensions - VAS6292/6- on some oil containers.

• The hose must not sag.

– Open the valve -arrow- and hold the oil container as shown.

The bevel box is now filled.

– Lift the vehicle after a few minutes.

Note

♦ *If the bevel gear is filled correctly, oil should leak out of the Adapter .*

♦ *If no oil is escaping, lower the vehicle and perform filling procedure again.*

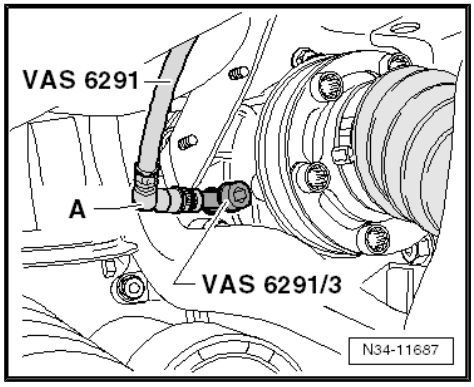

– Lift the vehicle.

– If oil leaks from the Adapter , set down the oil reservoir (for example, on a tool trolley).

A portion of the excess oil runs back into the oil container.

– When the fluid stops running back, press the button in direction of -arrow- and remove the Charging Device For Haldex Coupling 2 (shown on the Charging Device For Haldex Coupling 2 - Adapter 2 - VAS6291/2-).

– Make sure there is still oil in the Charging Device For Haldex Coupling 2 - VAS6291A- hose.

– Remove the Adapter .

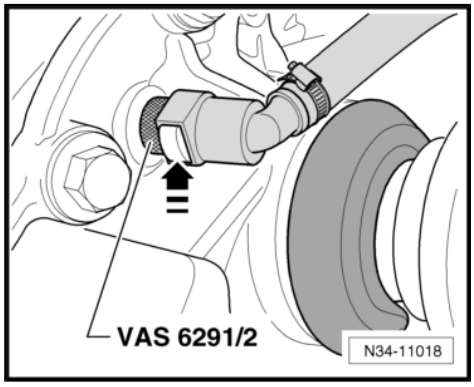

Protected by copyright. Copying for private or commercial purposes, in part or in whole, is not permitted unless authorised by Volkswagen AG. Volkswagen AG does not guarantee or accept any liability with respect to the correctness of this document. Copyright by Volkswagen AG.

– Install the new oil filler plug -arrow-.

– Tighten the oil filler plug to the specification. Refer to ⇒ “10.2.1 Tightening Specification”, page 221 .

• Carefully remove any oil that has flowed onto the bevel box and other components.

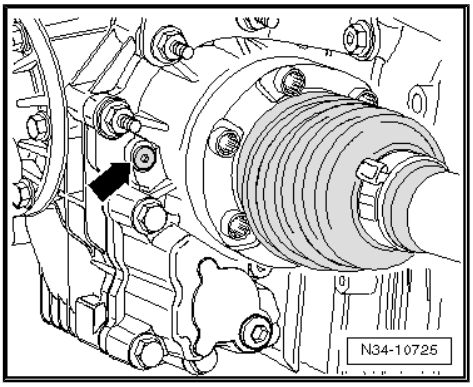

– Attach the right drive axle heat shield (if equipped) to the bevel box -arrows- and then tighten to the tightening specification. Refer to ⇒ “10.2.1 Tightening Specification”, page 221 .

– Install the noise insulation. Refer to ⇒ Body Exterior; Rep. Gr. 50 ; Noise Insulation .

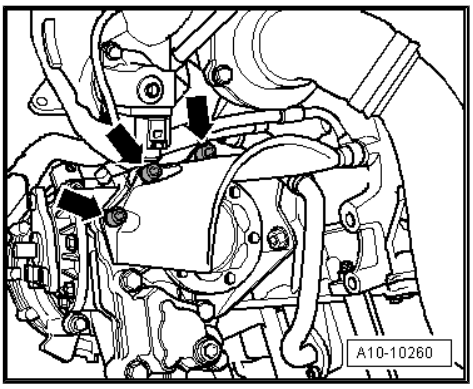

10.2.1 Tightening Specification

Oil Filler Plug ♦ Replace the bolt.	15 Nm
Right heat shield/drive axle to bevel gear	20 Nm

Protected by copyright. Copying for private or commercial purposes, in part or in whole, is not permitted unless authorised by Volkswagen AG. Volkswagen AG does not guarantee or accept any liability with respect to the correctness of information in this document. Copyright by Volkswagen AG.

11 Transmission, Disassembling and Assembling

⇒ "11.1 Overview - Transmission, FWD", page 222

⇒ "11.2 Overview - Transmission, AWD", page 224

⇒ "11.3 Overview - FWD", page 225

⇒ "11.4 Overview - AWD", page 226

⇒ "11.5 Transmission Housing and Gearshift Mechanism, Removing and Installing", page 228

⇒ "11.6 Overview - Input Shaft, Output Shafts, Differentials and Shift Rods, Removing and Installing, for FWD Vehicles", page 231

⇒ "11.7 Overview - Input Shaft, Output Shaft, Differential, Bevel Box and Shift Rods, Removing and Installing, for AWD Vehicles", page 234

⇒ "11.8 Assembly Sequence, Transmission without a Securing Ring A for the Metal Cover for the Input Shaft", page 235

⇒ "11.9 Assembly Sequence: I = Transmission with a Securing Ring A for the Metal Cover for the Input Shaft; II = Transmission with Plastic Cover for Input Shaft", page 247

11.1 Overview - Transmission, FWD

Protected by copyright. Copyright by Volkswagen AG. Volkswagen AG does not guarantee or accept any liability with respect to the correctness of information in this document. Copyright by Volkswagen AG.

1 - Clutch Housing

2 - Reverse Shaft

3 - 5th, 6th and Reverse Gear Output Shaft

4 - Clutch Slave Cylinder with Release Bearing

5 - Input Shaft

6 - 1st through 4th Gear Output Shaft

7 - Differential

8 - Right Flange Shaft

9 - Left Flange Shaft

10 - 2nd Gear Wheel

11 - 1st Gear Wheel

12 - 4th Gear Wheel

13 - 3rd Gear Wheel

14 - 5th Gear Wheel

15 - 6th Gear Wheel

16 - Reverse Gear Wheel

17 - Transmission Housing

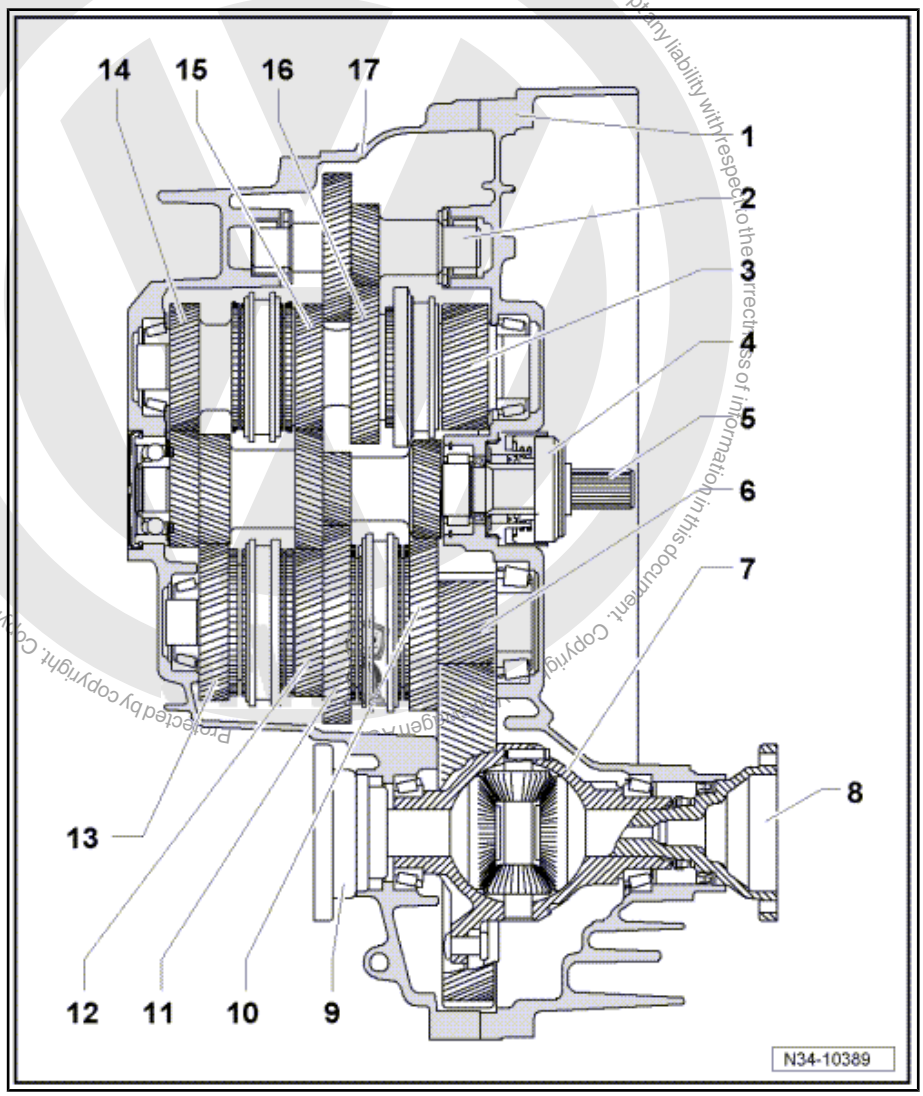

Protected by copyright. Copying for private or commercial purposes, in part or in whole, is not permitted unless authorised by Volkswagen AG. Volkswagen AG does not guarantee or accept any liability with respect to the correctness of information in this document. Copyright by Volkswagen AG.

11.2 Overview - Transmission, AWD

1 - Clutch Housing

2 - Reverse Shaft

3 - 5th, 6th and Reverse Gear Output Shaft

4 - Clutch Slave Cylinder with Release Bearing

5 - Input Shaft

6 - 1st through 4th Gear Output Shaft

7 - Differential

8 - Bevel Box

9 - Right Flange Shaft

10 - Head Bevel Gear with Input Shaft

11 - Shaft Bevel Gear

12 - Output Flange

13 - Left Flange Shaft

14 - 2nd Gear Wheel

15 - 1st Gear Wheel

16 - 4th Gear Wheel

17 - 3rd Gear Wheel

18 - 5th Gear Wheel

19 - 6th Gear Wheel

20 - Reverse Gear Wheel

21 - Transmission Housing

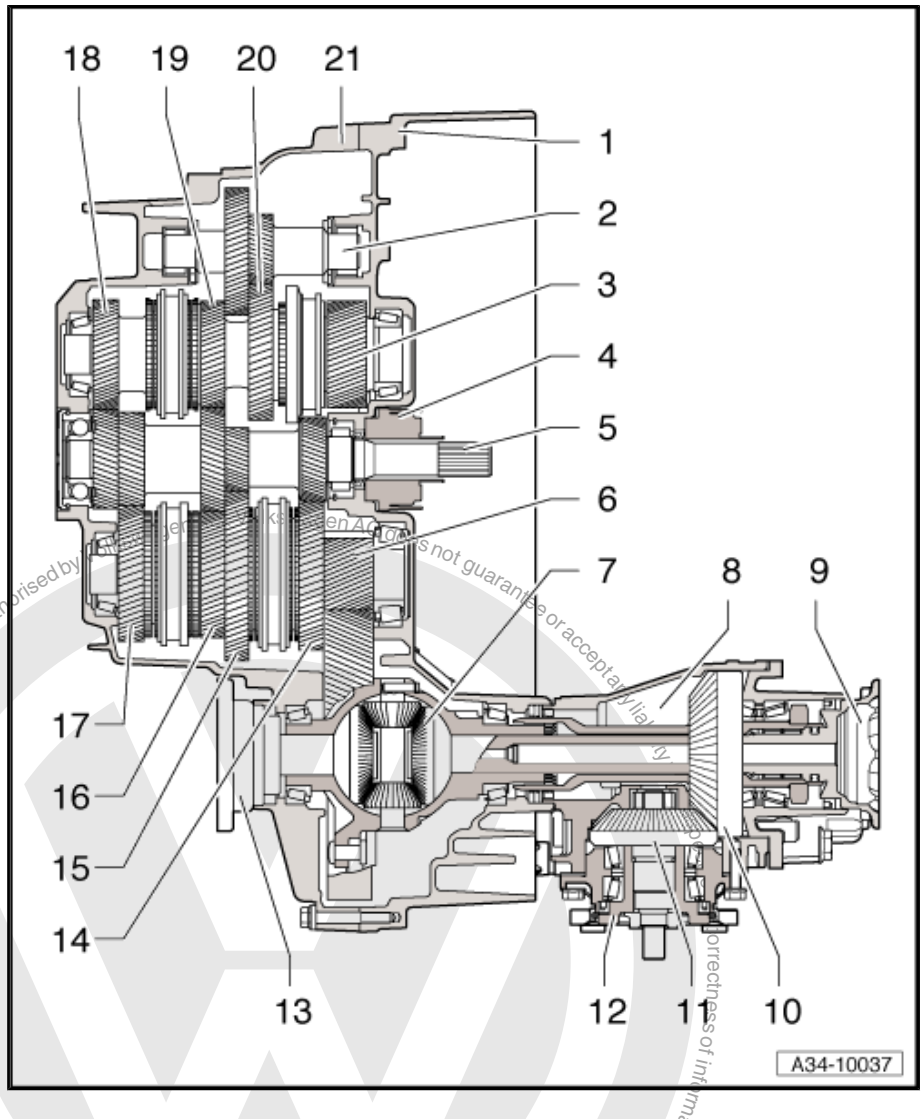

Protected by copyright. Copying for private or commercial purposes, in part or in whole is not permitted unless authorised by Volkswagen AG. Volkswagen AG does not guarantee or accept any liability with respect to the correctness of information in this document. Copyright by Volkswagen AG.

11.3 Overview - FWD

I -
⇒ “11.5 Transmission Housing and Gearshift Mechanism, Removing and Installing”, page 228 .

II -
⇒ “11.6 Overview - Input Shaft, Output Shafts, Differentials and Shift Rods, Removing and Installing, for FWD Vehicles”, page 231 .

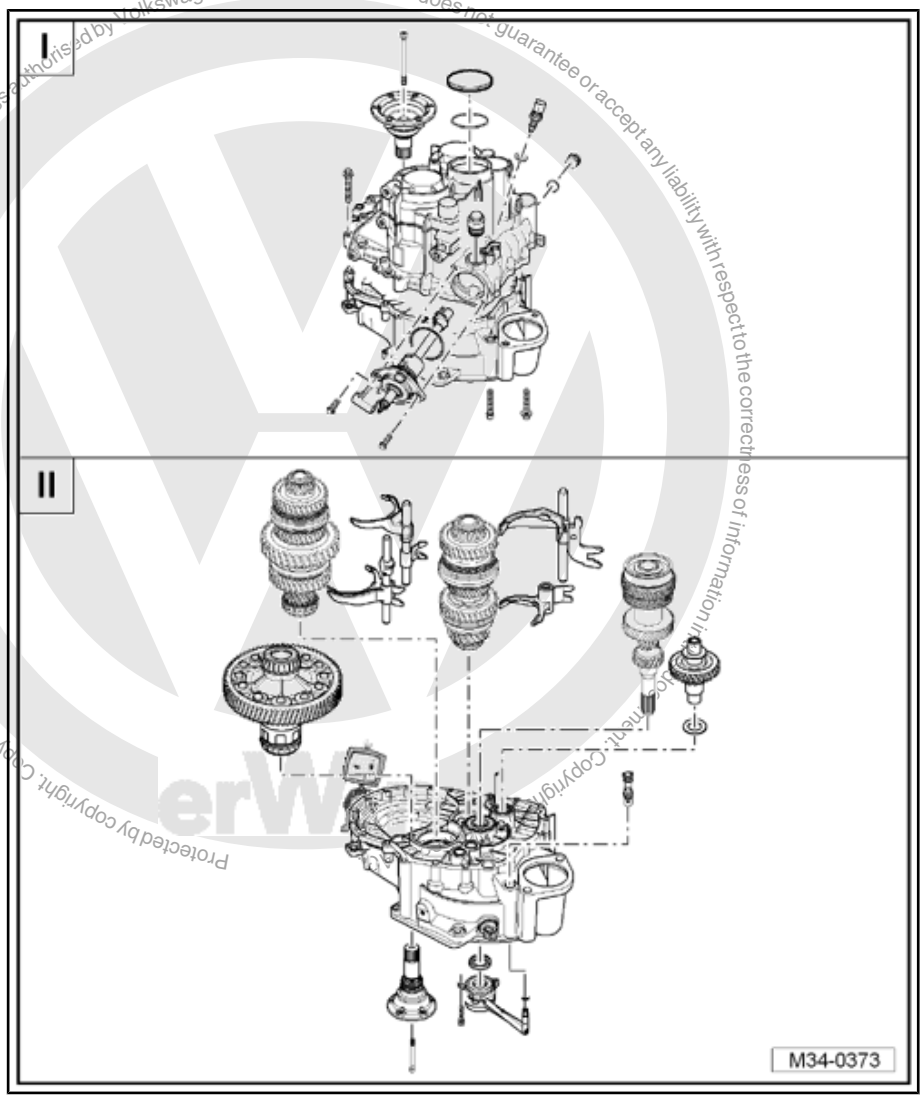

Protected by copyright. Copying for private or commercial purposes, in part or in whole, is not permitted unless authorised by Volkswagen AG. Volkswagen AG does not guarantee or accept any liability with respect to the correctness of information in this document. Copyright

Volkswagen AG. Volkswagen AG does not guarantee or assume any liability with respect to the correctness of information in this document. Copyright by Volkswagen AG. Private or commercial purposes, in part or in whole, is not permitted unless authorized by Volkswagen AG.

Note

- *Metal and plastic covers are installed for the input shaft.*
- *The plastic cover does not require the securing ring -A-.*

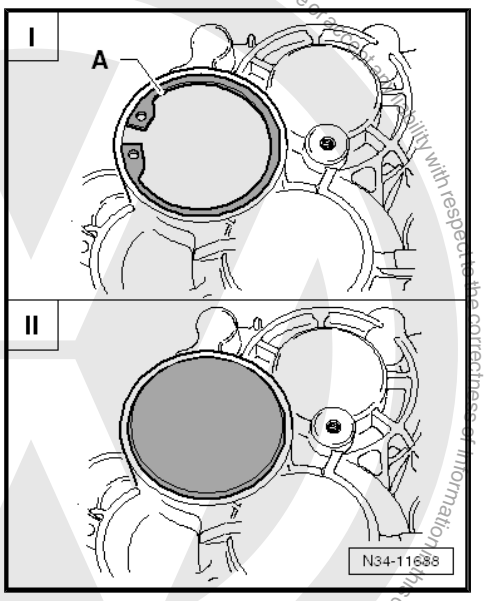

I = Metal Cover for Input Shaft		
Through transmission manufacture date 1/20/08	»Without« securing ring -A-	Assembly sequence. Refer to ⇒ “11.8 Assembly Sequence, Transmission without a Securing Ring A for the Metal Cover for the Input Shaft”, page 235 .
From transmission manufacture date 1/21/08	»With« securing ring -A-	Assembly sequence. Refer to ⇒ “11.9 Assembly Sequence: I = Transmission with a Securing Ring A for the Metal Cover for the Input Shaft; II = Transmission with Plastic Cover for Input Shaft”, page 247 .

II = Plastic Cover for Input Shaft	
»Without« securing ring -A-	Assembly sequence. Refer to ⇒ “11.9 Assembly Sequence: I = Transmission with a Securing Ring A for the Metal Cover for the Input Shaft; II = Transmission with Plastic Cover for Input Shaft”, page 247 .

11.4 Overview - AWD

I -
⇒ “11.5 Transmission Housing and Gearshift Mechanism, Removing and Installing”, page 228 .

II -
⇒ “11.7 Overview - Input Shaft, Output Shaft, Differential, Bevel Box and Shift Rods, Removing and Installing, for AWD Vehicles”, page 234

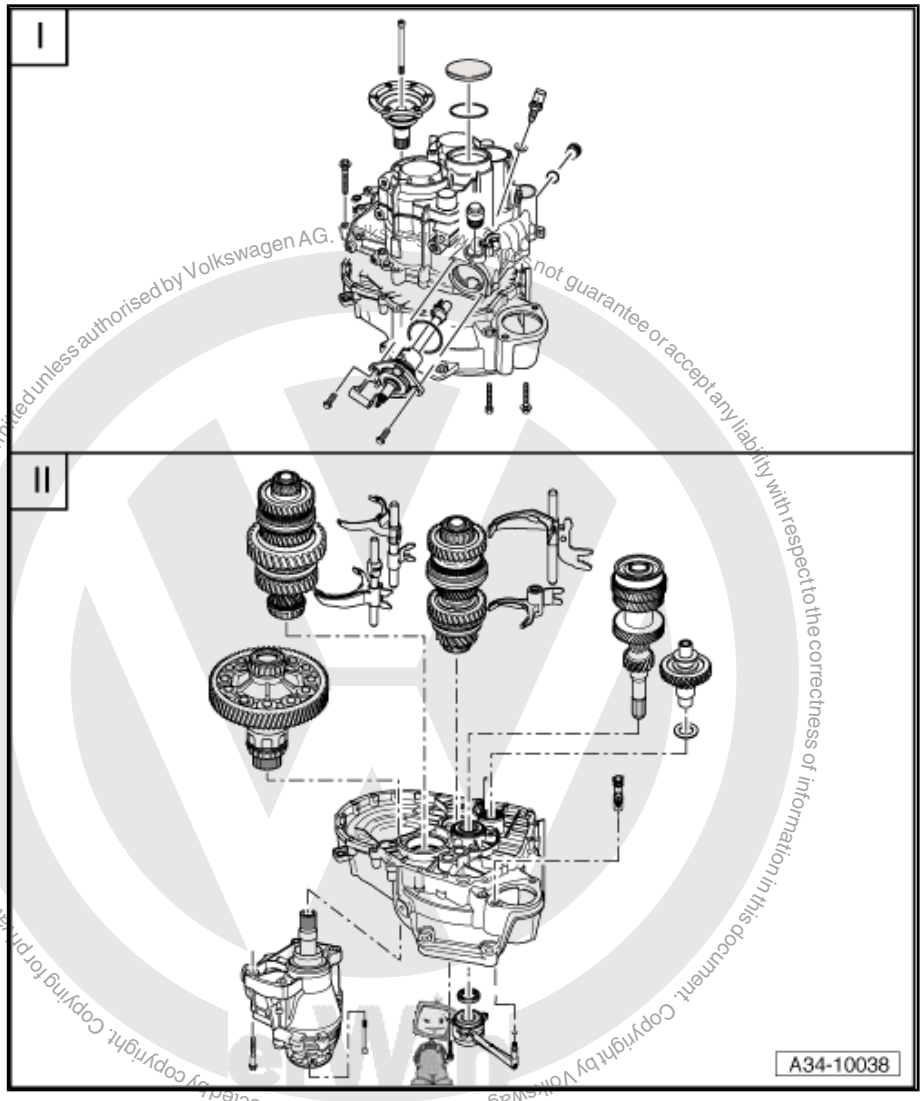

Protected by copyright. Copyright for private or commercial purposes, in part or in whole, is not permitted unless authorised by Volkswagen AG. Copyright by Volkswagen AG. We do not guarantee or accept any liability with respect to the correctness of information in this document.

Note

- *Metal and plastic covers are installed for the input shaft.*
- *The plastic cover does not require the securing ring -A-.*

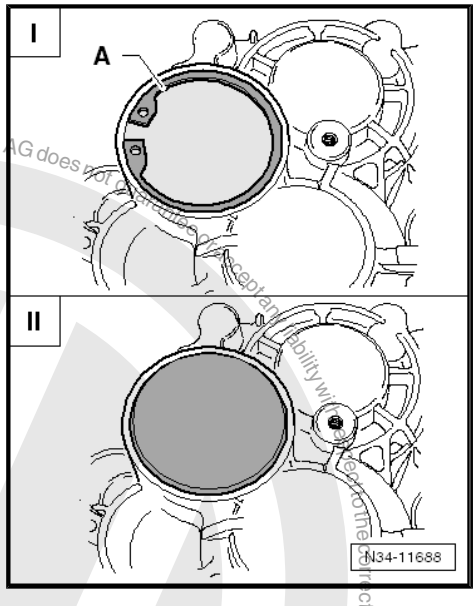

I = Metal Cover for Input Shaft		
Through transmission manufacture date 1/20/08	»Without« securing ring -A-	Assembly sequence. Refer to ⇒ “11.8 Assembly Sequence, Transmission without a Securing Ring A for the Metal Cover for the Input Shaft”, page 235 .
From transmission manufacture date 1/21/08	»With« securing ring -A-	Assembly sequence. Refer to ⇒ “11.9 Assembly Sequence: I = Transmission with a Securing Ring A for the Metal Cover for the Input Shaft; II = Transmission with Plastic Cover for Input Shaft”, page 247 .

II = Plastic Cover for Input Shaft	
Always »without« securing ring -A-	Assembly sequence. Refer to ⇒ “11.9 Assembly Sequence: I = Transmission with a Securing Ring A for the Metal Cover for the Input Shaft; II = Transmission with Plastic Cover for Input Shaft”, page 247 .

11.5 Transmission Housing and Gearshift Mechanism, Removing and Installing

Copyright by Volkswagen AG. Volkswagen AG does not guarantee or accept any liability with respect to the correctness of information in this document. Copyright by Volkswagen AG. Reproduction or publication of this document, in whole or in part, is not permitted for private or commercial purposes, in paper or in whole, is not permitted unless authorised by Volkswagen AG.

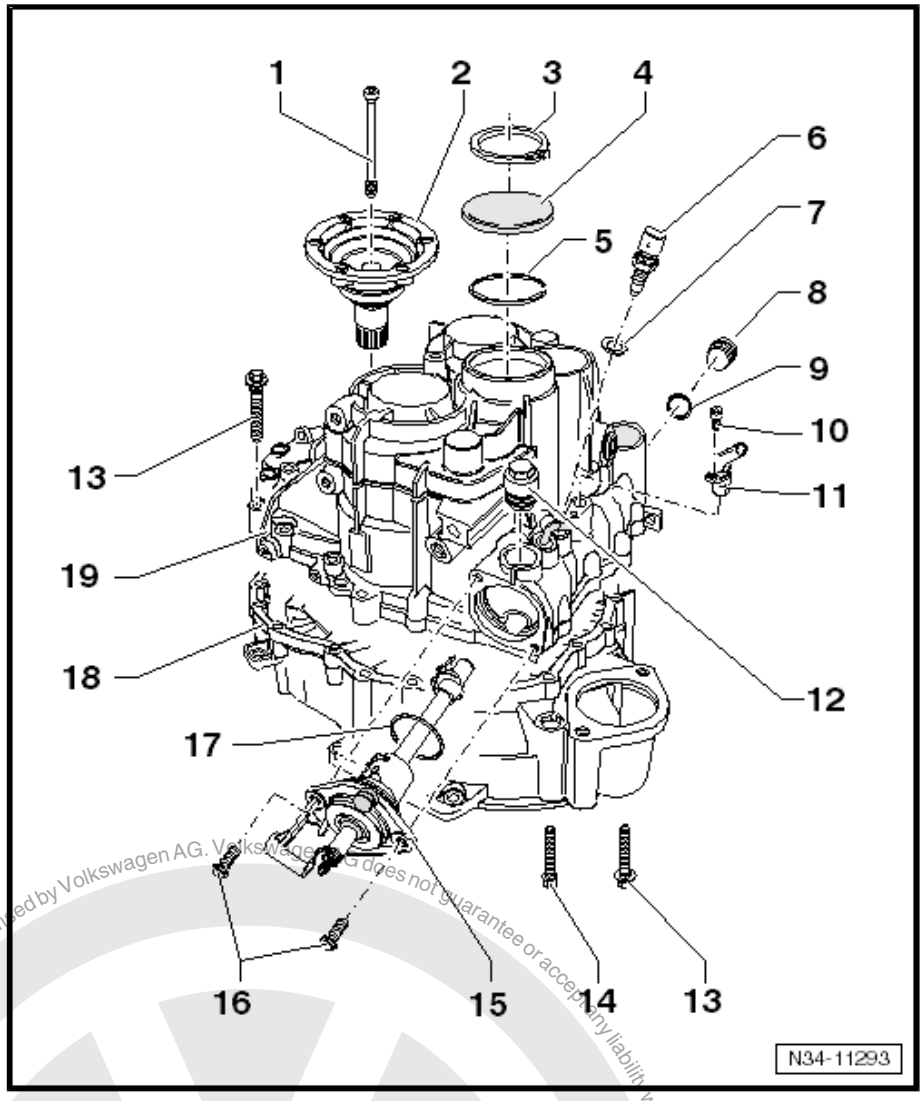

1 - Bolt

- ❑ 33 Nm

2 - Flange Shaft with Pressure Spring

- ❑ Removing and installing. Refer to ⇒ "1.1 Left Flange Shaft Seal, Replacing", page 369 .
- ❑ Assembling. Refer to ⇒ "5.1 FWD Differential, Disassembling and Assembling", page 394 .

3 - Circlip

- ❑ For the metal cover
- ❑ Installed from transmission date of manufacture 1/20/08
- ❑ Not used in plastic covers

4 - Cap

- ❑ Made of metal or plastic
- ❑ Made of metal: secured with securing ring -item 3- ⇒ Item 3 (page 229) from transmission manufacture date 1/21/2008
- ❑ Made of plastic: the circlip -item 3- ⇒ Item 3 (page 229) was discontinued
- ❑ Allocate the components using the Parts Catalog.

5 - Circlip

- ❑ For the grooved ball bearing/input shaft -item 1- ⇒ Item 1 (page 310) .

6 - Back-Up Lamp Switch - F4- , 20 Nm

- ❑ Short after series introduction of transmission with permanent seal -item 7- ⇒ Item 7 (page 229)

7 - Seal

- ❑ Not installed on all transmissions
- ❑ Replace after removing

8 - Oil Drain Plug

- ❑ Tightening specification. Refer to ⇒ Fig. ""Different Versions of the Oil Fill and Drain Plugs"" , page 192 .

9 - Seal

- ❑ Replace after removing

10 - Bolt

- ❑ 6 Nm

11 - Transmission Neutral Position Sensor - G701-

- ❑ For vehicles with the Start/Stop System

12 - Locking Bolt

- ❑ Metal locking bolt 45 Nm
- ❑ Plastic locking bolt 30 Nm

Copyright by Volkswagen AG. Volkswagen AG does not guarantee or accept any liability with respect to the correctness of information in this document. Copyright by Volkswagen AG. Protected by copyright. Copying for private or commercial purposes, in part or in whole, is not permitted unless authorized by Volkswagen AG.

- ❑ For the selector shaft
- ❑ Replace locking bolt after removing
- ❑ Metal or plastic locking bolt

13 - Bolt

- ❑ Replace after disassembling. Refer to the Parts Catalog for allocation.
- ❑ There are different bolts and tightening specifications

- ♦ Internal hex round head = »through transmission manufacture date 12/6/2009«, aluminum bolt M8 = 8 Nm and 180° additional turn
- ♦ Internal hex round head = »through transmission manufacture date 12/7/2009«, aluminum bolt M9 = 15 Nm and 180° additional turn
- ♦ Outer hex head = steel bolt = 15 Nm and 90° additional turn
  - ❑ Steel bolts allocation. Refer to ⇒ Fig. ""If the Steel Bolts (out hex head) are the Replacement Part, Pay Attention to the Allocation"" , page 231

14 - Bolt

- ❑ Replace after disassembling. Refer to the Parts Catalog for allocation.
- ❑ There are different bolts and tightening specifications

- ♦ Internal hex round head = »through transmission manufacture date 12/6/2009«, aluminum bolt M8 = 8 Nm and 180° additional turn
- ♦ Internal hex round head = »through transmission manufacture date 12/7/2009«, aluminum bolt M9 = 15 Nm and 180° additional turn
- ♦ Outer hex head = steel bolt = 15 Nm and 90° additional turn
  - ❑ Steel bolts allocation. Refer to ⇒ Fig. ""If the Steel Bolts (out hex head) are the Replacement Part, Pay Attention to the Allocation"" , page 231

15 - Gearshift Unit

- ❑ (Gearshift shaft with gearshift cover)
- ❑ Servicing. Refer to ⇒ "14 Shift Unit, Servicing", page 273 .
- ❑ Removing with the transmission installed:

- ♦ Remove the battery and the battery tray. Refer to ⇒ Electrical Equipment; Rep. Gr. 27 ; Battery; Battery, Removing and Installing .
- ♦ The locking elbow -item 6- ⇒ Item 6 (page 262) for adjusting the shift mechanism must not be engaged
- ♦ Remove the cables and gearshift lever. Refer to ⇒ "1.7 Overview - Operating Cables", page 85 .
- ♦ Remove the locking bolt -item 12- ⇒ Item 12 (page 229) and remove the shift mechanism.

16 - Bolt

- ❑ 20 Nm
- ❑ Replace after removing

17 - O-Ring

- ❑ Replace after removing

18 - Clutch Housing

- ❑ Servicing. Refer to ⇒ "13 Clutch Housing, Servicing", page 269 .

19 - Transmission Housing

- ❑ Servicing. Refer to ⇒ "12 Transmission Housing, Servicing", page 261 .

Protected by copyright. Copyright by Volkswagen AG. Volkswagen AG does not guarantee or accept any liability with respect to the correctness of information in this document. Copyright by Volkswagen AG.

If the Steel Bolts (out hex head) are the Replacement Part, Pay Attention to the Allocation

A - Bolt with permanent washer

B - Bolt without washer

C - Bolt with permanent washer

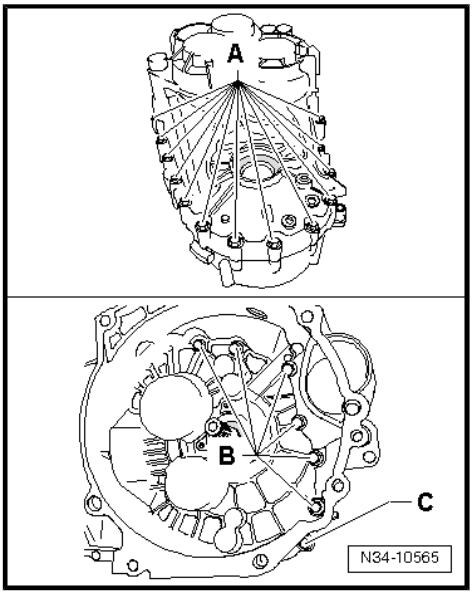

11.6 Overview - Input Shaft, Output Shafts, Differentials and Shift Rods, Removing and Installing, for FWD Vehicles

⇒ "11.6.1 Shafts and Gearshift Rods in Transmission Installation Location", page 233

Protected by copyright. Copyright by Volkswagen AG. Copying for private or commercial purposes, in part or in whole, is not permitted unless authorised by Volkswagen AG. Volkswagen AG does not guarantee or accept any liability with respect to the correctness of information in this document.

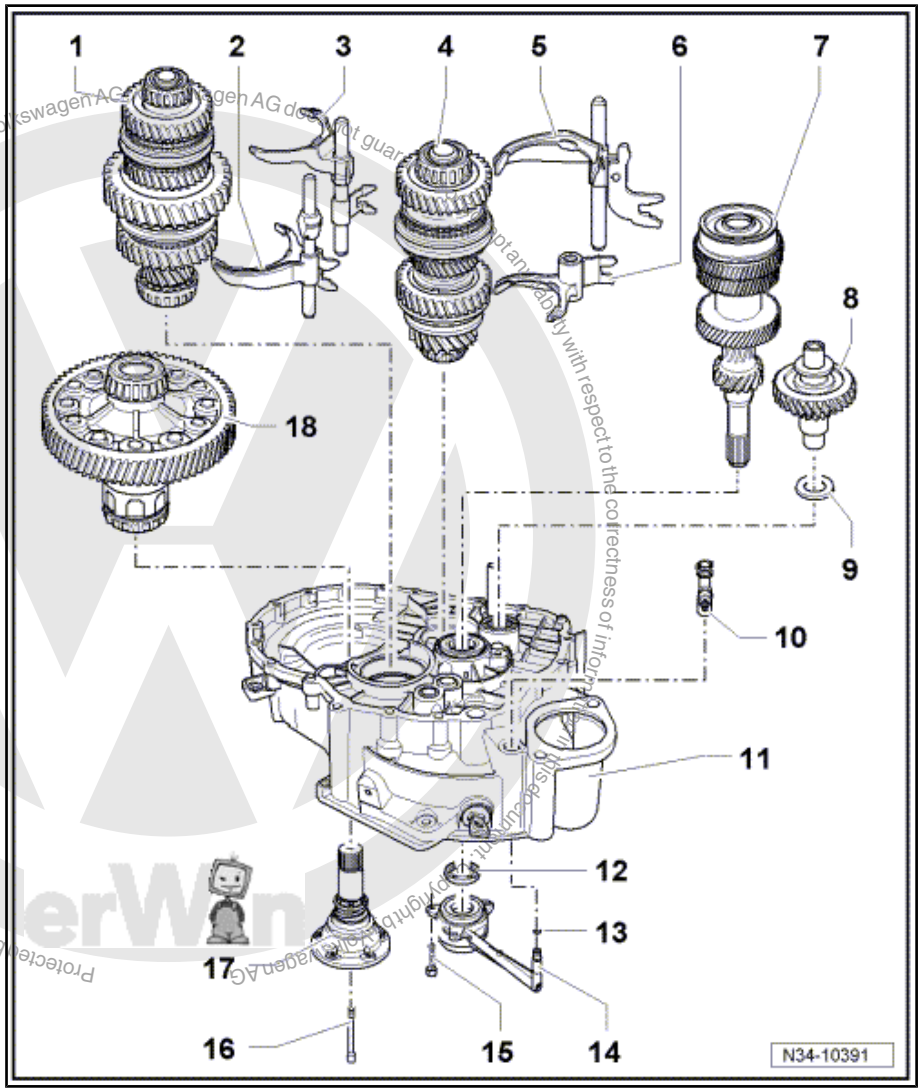

1 - 1st through 4th Gear Output Shaft

- ❑ Disassembling and assembling. Refer to ⇒ “2.2 Output Shaft, 1st to 4th Gears, Disassembling and Assembling”, page 321 .
- ❑ Installation position. Refer to ⇒ “11.6.1 Shafts and Gearshift Rods in Transmission Installation Location”, page 233 .

2 - Gearshift Rod with 1st Gear and 2nd Gear Shift Fork

- ❑ Installation position. Refer to ⇒“11.6.1 Shafts and Gearshift Rods in Transmission Installation Location”, page 233 .

3 - Gearshift Rod with 3rd Gear and 4th Gear Shift Fork

- ❑ Installation position. Refer to ⇒ “11.6.1 Shafts and Gearshift Rods in Transmission Installation Location”, page 233 .

4 - 5th, 6th and Reverse Gear Output Shaft

- ❑ Disassembling and assembling. Refer to ⇒ “3 5th, 6th and Reverse Gear Output Shaft”, page 344 .
- ❑ Installation position. Refer to ⇒ “11.6.1 Shafts and Gearshift Rods in Transmission Installation Location”, page 233 .

5 - Gearshift Rod with 5th Gear and 6th Gear Shift Fork

- ❑ Installation position. Refer to ⇒ “11.6.1 Shafts and Gearshift Rods in Transmission Installation Location”, page 233 .

6 - Reverse Gear Shift Fork

- ❑ Installation position. Refer to ⇒ “11.6.1 Shafts and Gearshift Rods in Transmission Installation Location”, page 233 .
- ❑ Difference. Refer to ⇒ Fig. ““Reverse Gear Shift Fork Differentiation““ , page 278
- ❑ Servicing. Refer to ⇒ “15 Shift Forks, Servicing”, page 277 .

7 - Input Shaft

- ❑ Disassembling and assembling. Refer to ⇒ “1.1 Overview - Input Shaft”, page 310 .
- ❑ Replace grooved ball bearing on driveshaft after removing -item 6- ⇒ Item 6 (page 311) .

8 - Reverse Shaft

- ❑ With a thrust washer

9 - Thrust Washer

10 - Bleeder

- ❑ Connect with clutch slave cylinder -item 14- ⇒ Item 14 (page 233)

11 - Clutch Housing

- ❑ Servicing. Refer to ⇒ “13 Clutch Housing, Servicing”, page 269 .

12 - Input Shaft Seal

- ❑ Replacing. Refer to ⇒ “2.4 Input Shaft Seal, Replacing”, page 55 .

13 - O-Ring

- ❑ Install on the line connection
- ❑ Coat with brake fluid before installing

14 - Clutch Slave Cylinder with Release Bearing

15 - Bolt

- ❑ Quantity: 3
- ❑ Replace after removing
- ❑ Removing and installing -item 4- ⇒ Item 4 (page 50) .

16 - Bolt

- ❑ 33 Nm

17 - Flange Shaft with Pressure Spring

- ❑ Removing and installing. Refer to ⇒ “1 Flange Shaft Seals, Manual Transmission Installed, Replacing for FWD Vehicles”, page 369 .
- ❑ Assembling. Refer to ⇒ “5.1 FWD Differential, Disassembling and Assembling”, page 394 .

18 - Differential

- ❑ Disassembling and assembling. Refer to ⇒ “5.1 FWD Differential, Disassembling and Assembling”, page 394 .

11.6.1 Shafts and Gearshift Rods in Transmission Installation Location

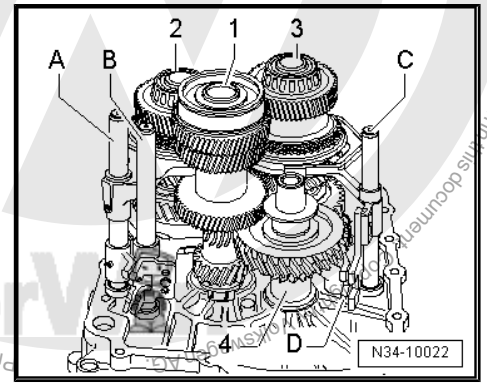

1 - Input Shaft

2 - 1st through 4th Gear Output Shaft

3 - 5th, 6th and Reverse Gear Output Shaft

4 - Reverse Shaft

A - 3rd and 4th Gear Gearshift Rod

B - 1st and 2nd Gear Gearshift Rod

C - 5th and 6th Gear Gearshift Rod

D - Reverse gear shift fork [1)]

[1)] On some transmissions, the bearing on the reverse gear shift fork on the shift rod for 5th and 6th gear shift fork -C-. Refer to ⇒ Fig. ““The Reverse Gear Shift Fork -1- is Mounted on the Gearshift Rod with the 5th and 6th Gear Shift Fork -2-.”“ , page 254 . Difference, reverse gear shift forks. Refer to ⇒ Fig. ““Reverse Gear Shift Fork Differentiation”“ , page 278 .

Protected by copyright. Copying for private or commercial purposes, in part or in whole, is not permitted unless authorised by Volkswagen AG. Volkswagen AG does not guarantee or accept any liability with respect to the correctness of information in this document.

11.7 Overview - Input Shaft, Output Shaft, Differential, Bevel Box and Shift Rods, Removing and Installing, for AWD Vehicles

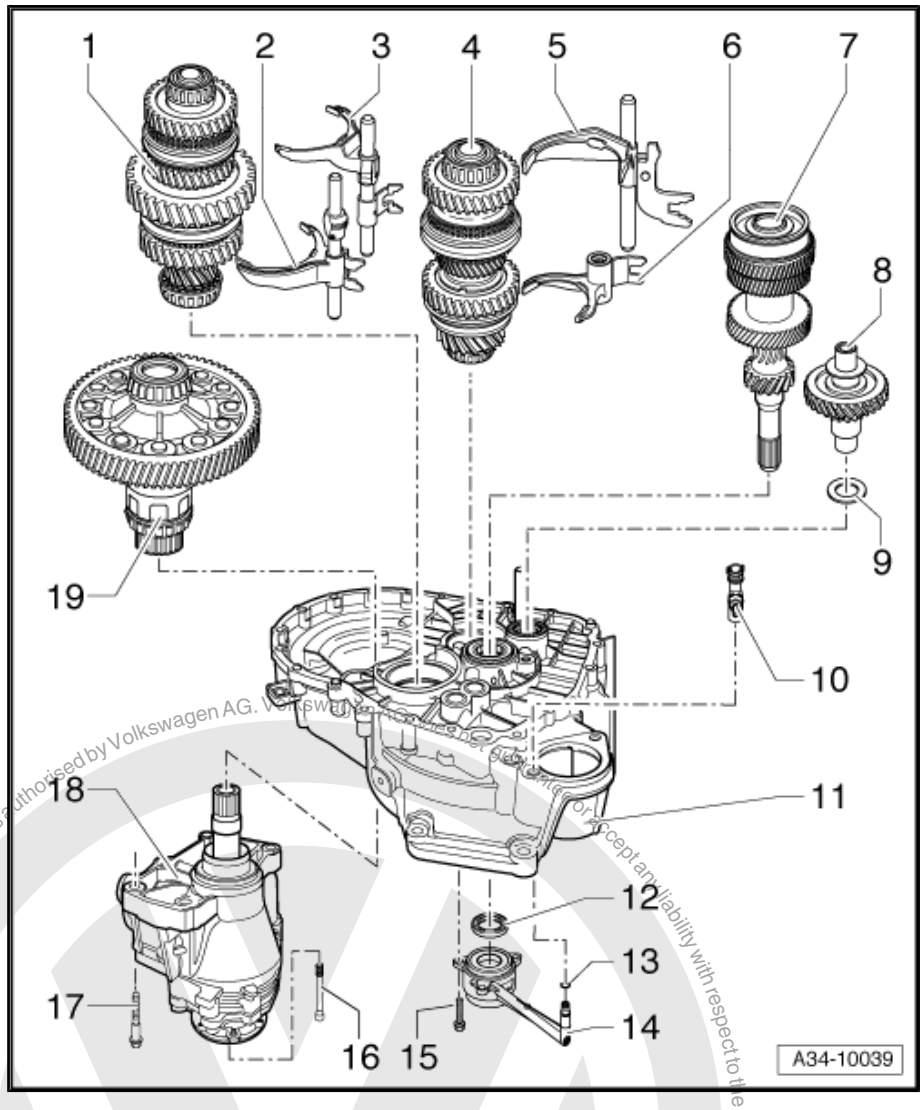

1 - 1st through 4th Gear Output Shaft

- ❑ Installation position. Refer to ⇒ “11.6.1 Shafts and Gearshift Rods in Transmission Installation Location”, page 233 .
- ❑ Disassembling and assembling. Refer to ⇒ “2.2 Output Shaft, 1st to 4th Gears, Disassembling and Assembling”, page 321 .

2 - Gearshift Rod with 1st Gear and 2nd Gear Shift Fork

- ❑ Installation position. Refer to ⇒ “11.6.1 Shafts and Gearshift Rods in Transmission Installation Location”, page 233 .
- ❑ Servicing. Refer to ⇒ “15 Shift Forks, Servicing”, page 277 .

3 - Gearshift Rod with 3rd Gear and 4th Gear Shift Fork

- ❑ Installation position. Refer to ⇒ “11.6.1 Shafts and Gearshift Rods in Transmission Installation Location”, page 233 .
- ❑ Servicing. Refer to ⇒ “15 Shift Forks, Servicing”, page 277 .

4 - 5th, 6th and Reverse Gear Output Shaft

- ❑ Installation position. Refer to ⇒ “11.6.1 Shafts and Gearshift Rods in Transmission Installation Location”, page 233
- ❑ Disassembling and assembling. Refer to ⇒ “3 5th, 6th and Reverse Gear Output Shaft”, page 344 .

5 - Gearshift Rod with 5th Gear and 6th Gear Shift Fork

- ❑ Installation position. Refer to ⇒ “11.6.1 Shafts and Gearshift Rods in Transmission Installation Location”, page 233 .

6 - Reverse Gear Shift Fork

- ❑ Installation position. Refer to ⇒ “11.6.1 Shafts and Gearshift Rods in Transmission Installation Location”, page 233 .
- ❑ Difference. Refer to ⇒ Fig. ““Reverse Gear Shift Fork Differentiation”“, page 278
- ❑ Servicing. Refer to ⇒ “15 Shift Forks, Servicing”, page 277 .

7 - Input Shaft

- ❑ Installation position. Refer to ⇒ “11.6.1 Shafts and Gearshift Rods in Transmission Installation Location”, page 233 .
- ❑ Disassembling and assembling. Refer to ⇒ “1.1 Overview - Input Shaft”, page 310 .

Copyright by Volkswagen AG. Verbreitung und Vervielfältigung nur in Verbindung mit schriftlicher Genehmigung unseres Hauses und unter Angabe der Quelle gestattet. Copyright by Volkswagen AG. Verbreitung und Vervielfältigung nur in Verbindung mit schriftlicher Genehmigung unseres Hauses und unter Angabe der Quelle gestattet. Copyright by Volkswagen AG. Verbreitung und Vervielfältigung nur in Verbindung mit schriftlicher Genehmigung unseres Hauses und unter Angabe der Quelle gestattet. Copyright by Volkswagen AG. Verbreitung und Vervielfältigung nur in Verbindung mit schriftlicher Genehmigung unseres Hauses und unter Angabe der Quelle gestattet.

- ❑ Replace grooved ball bearing on driveshaft after removing -item 6- ⇒ Item 6 (page 311) .

8 - Reverse Shaft

- ❑ With a thrust washer

9 - Thrust Washer

10 - Bleeder

- ❑ Connect with clutch slave cylinder

11 - Clutch Housing

- ❑ Servicing. Refer to ⇒ “13 Clutch Housing, Servicing”, page 269 .

12 - Input Shaft Seal

- ❑ Replacing. Refer to ⇒ “2.4 Input Shaft Seal, Replacing”, page 55 .

13 - O-Ring

- ❑ Install on the line connection
- ❑ Coat with brake fluid before installing

14 - Clutch Slave Cylinder with Release Bearing

15 - Bolt

- ❑ Quantity: 3
- ❑ Replace after removing
- ❑ Removing and installing -item 4- ⇒ Item 4 (page 50) .

16 - Bolt

- ❑ Removing and installing -item 13- ⇒ Item 13 (page 401) .

17 - Bolt

- ❑ 40 Nm + 90°
- ❑ Quantity: 4
- ❑ Replace after removing

18 - Bevel Box

- ❑ Seals, flange shaft bearing and output flange bearing inside the bevel box. Refer to ⇒ “3 Overview - Seals, Flange Shaft Bearing and Output Flange Bearing inside the Bevel Box”, page 377 .

19 - Differential

- ❑ Disassembling and assembling. Refer to ⇒ “5.2 Differential, AWD, Disassembling and Assembling”, page 399 .

11.8 Assembly Sequence, Transmission »without« a Securing Ring -A- for the Metal Cover for the Input Shaft

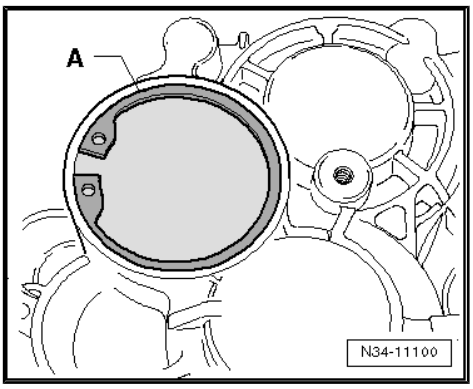

Special tools and workshop equipment required

- ♦ Holding Plate - VW309A-
- ♦ Holding Fixture - VW313-
- ♦ Transmission Support - VW353-

Protected by copyright. Copyright by Volkswagen AG. Copyright by Volkswagen AG. Private or commercial purposes, in part or in whole, is not permitted unless authorised by Volkswagen AG. Volkswagen AG does not guarantee or accept any liability with respect to the correctness of information in this document.

- Press Piece - Multiple Use - VW455- or Press Piece - Front Wishbone - 3160-
- Slide Hammer Set - VW771-
- Puller - Kukko Internal - 12-16mm - 21/1-
- Puller - Kukko Quick Action Separating Tool - 5-60mm - 17/0-
- Puller - Kukko Counterstay - 22/1-
- Bracket - Multiple Use - 30-211A-
- Seal Installer - Crankshaft - T10042-
- Locking Sleeve Drift - T10169-
- or Locking Sleeve Drift - T10362-
  ⇒ Fig. ""Lock Sleeve Differentiation"" , page 266
- Seal Installer - Driveshaft - T40008-
- Torque Wrench 1331 5-50Nm - VAG1331-
- Hot Air Blower - VAG1416-
- Shop Crane - Drip Tray - VAS6208-
- Socket And Extended Bit - T10107A-
- Sealing Compound - AMV 188 200 03-

Disassembling

– Attach the transmission to the assembly stand with bolts -arrows-.

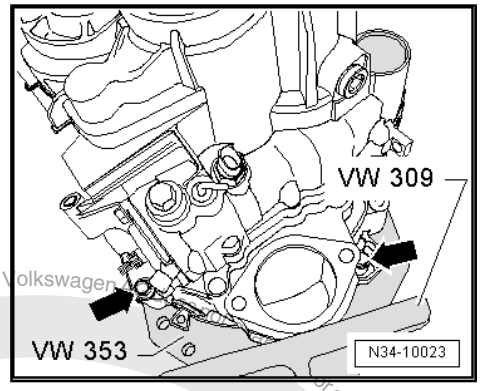

Note

If one of the fastening holes does not touch the Transmission Support place shims between the hole and the Transmission Support .

– Turn the transmission in the assembly stand so that the drain plug is facing down.

– Place the Drip Tray underneath.

– Drain gear oil from manual transmission.

AWD Transmission

– Remove the bolt for the right flange shaft with the Socket Wrench for example Socket And Extended Bit - T10107A- .

– Remove the four bolts -arrows- (only three bolts are shown in the illustration) that attach the bevel box to the transmission.

– Carefully press bevel box off manual transmission while protecting it against falling through.

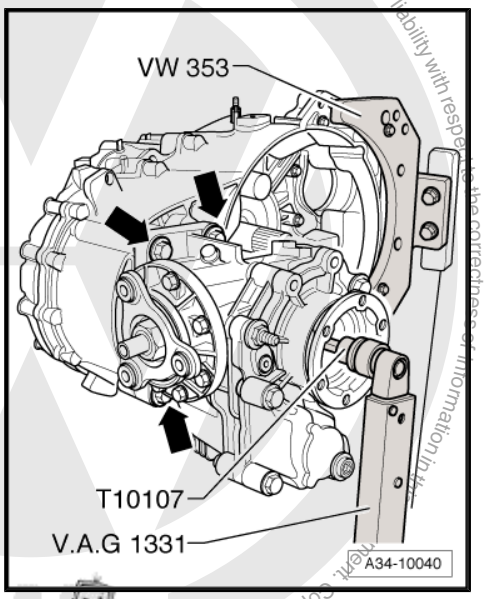

Transmission for FWD

Protected by copyright. Copying for private or commercial purposes, in part or in whole, is not permitted unless authorised by Volkswagen AG. Volkswagen AG does not guarantee or accept any liability with respect to the correctness of information in this document. Copyright by Volkswagen AG.

– Remove the right flange shaft (the illustration shows the left flange shaft).

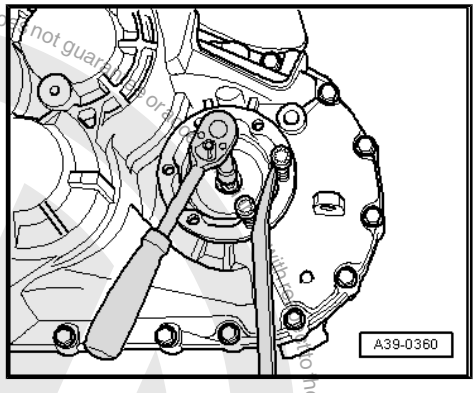

Continuation for All

– Remove the clutch slave cylinder with the release bearing -arrows-.

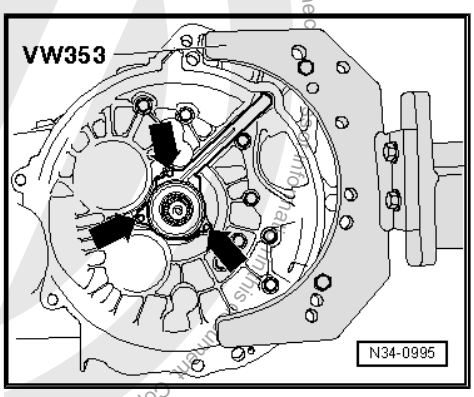

Make Sure the Gearshift Shaft Is Not Blocked by the Lock Elbow -arrow-.

– Move the gearshift shaft into neutral.

– Remove the Back-Up Lamp Switch - F4- -1-.

– Remove the locking bolt -2-.

– Then remove the bolts -3-.

– Remove selector shaft with shift cover -4- from transmission housing.

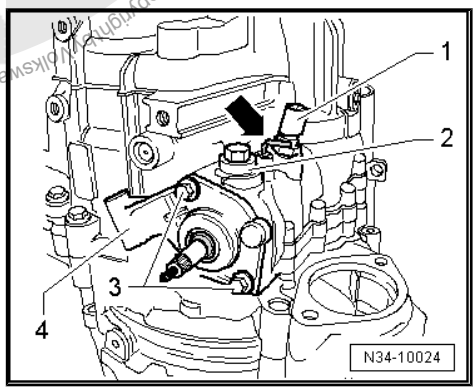

Note

Use the Pry Lever - 80-200- to press against the spring force of the securing bushing in direction of -arrow- so that the gearshift shaft -1- does not touch the securing bushing -2- when removing.

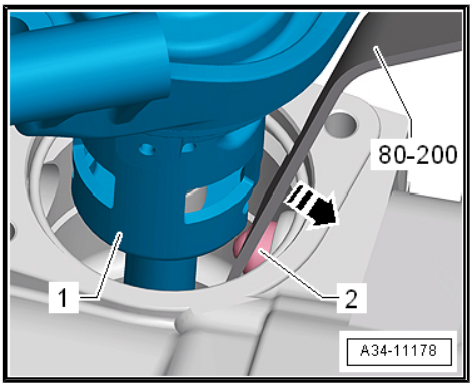

Protected by copyright. Copying for private or commercial purposes, in part or in whole, is not permitted unless authorised by Volkswagen AG. Volkswagen AG does not guarantee or assume any liability with respect to the correctness of information in this document. Copyright by Volkswagen AG.

– Remove the left flange shaft bolt. To do this, install two bolts into the flange and counterhold the flange using a pry bar.

– Remove the left flange shaft and the pressure spring.

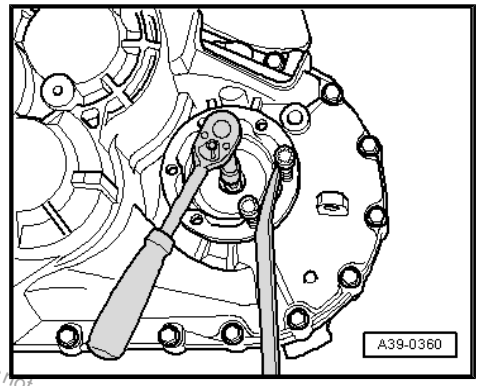

– Remove the bolts -B- that connect the clutch housing to the transmission housing.

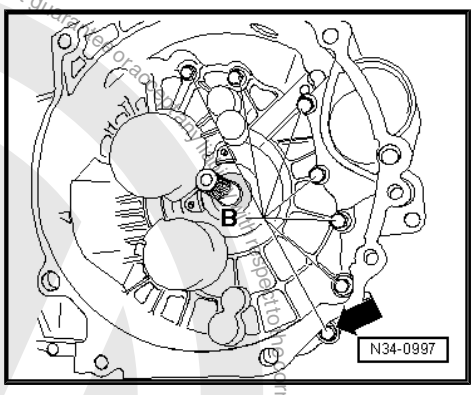

Note

One bolt -arrow- is located outside of the bolting flange.

– Secure the input shaft as follows:

The Stub Shaft Splines on the Input Shaft has Different Lengths on the Transmission.

– Either place the Press Piece - Multiple Use - VW455- over the input shaft on the clutch housing.

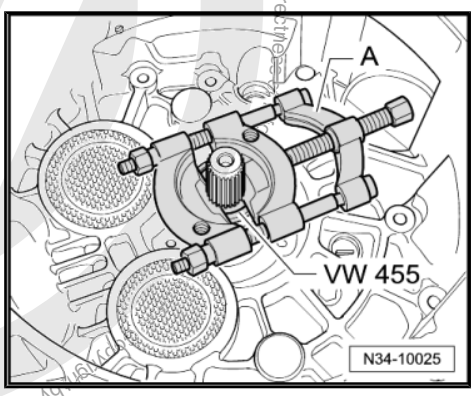

– Or place the Press Piece - Front Wishbone - 3160- over the input shaft on the clutch housing.

– Tension the Separating Tool -A-, for example Puller - Kukko Quick Action Separating Tool - 5-60mm - 17/0- , tightly behind the splines on the input shaft.

The back of the Puller - Kukko Quick Action Separating Tool - 5-60mm - 17/0- must touch the Press Piece - Multiple Use - VW455- or the Press Piece - Front Wishbone - 3160- free-of-play.

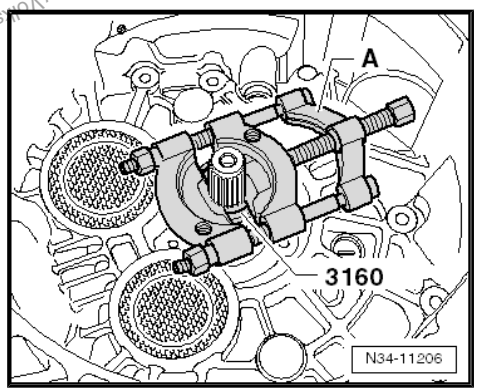

Protected by copyright. Copying for private or commercial purposes, in part or in whole, is not permitted unless authorized by Volkswagen AG. Volkswagen AG does not guarantee or accept any liability with respect to the correctness of

– Pierce the rubber piece in the center of the cover -C- using a screwdriver.

– Remove the cover from the transmission housing.

A - Counter Support , for example Puller - Kukko Counterstay - 22/1-

B - Internal Puller 8 to 12 mm , for example Puller - Kukko Internal - 12-16mm - 21/01-

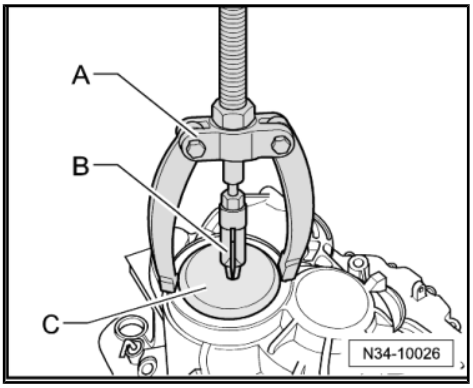

Note

- *Can push through the center of the cover for removing the cover -1-*
- *Pry the cover -2- carefully off the transmission housing.*

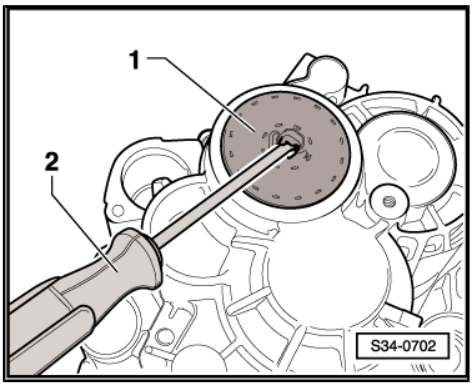

Remove the locking ring -C- from the grooved ball bearing on the input shaft/transmission housing as follows:

– Hold one end of the locking ring secure using the Screwdriver -A-.

– Pry the other end out of the groove in the grooved ball bearing in direction of -arrow- using the screwdriver -B-.

– Pry out the rest of the locking ring using the Screwdriver -B-.

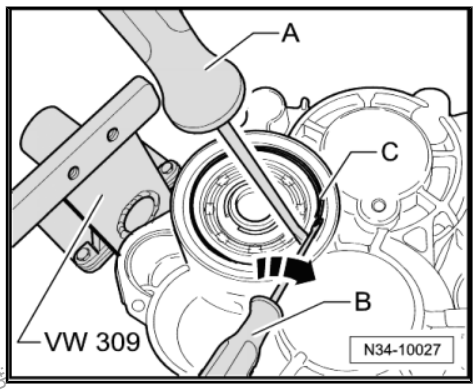

– Remove the washer -1- from the transmission housing -2-, if equipped.

- If transmission is replaced, see if the washer must be installed. Refer to ⇒ page 242 .

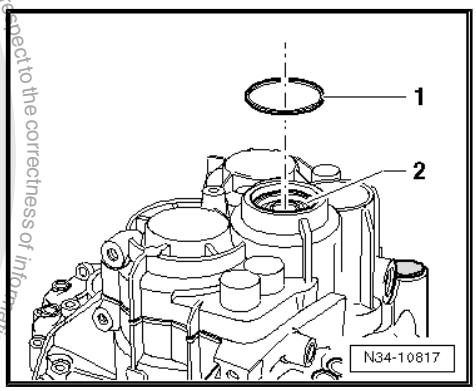

Protected by copyright. Copying for private or commercial purposes, in part or in whole, is not permitted unless authorised by Volkswagen AG. Volkswagen AG does not guarantee or accept any liability with respect to the correctness of information in this document. Copyright by Volkswagen AG.

– Remove the bolts -A- that attach the transmission housing to the clutch housing.

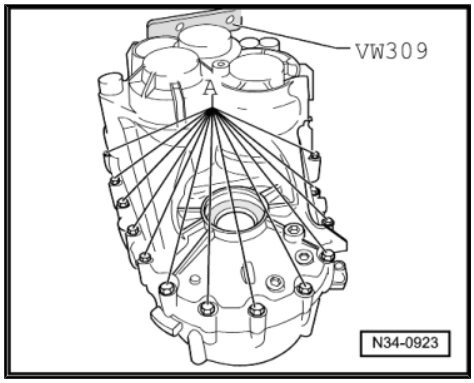

– Install the Slide Hammer Set - Adapter 40 - VW771/40- into the threaded hole in the transmission housing.

– Heat the transmission housing in the area near the bearing seat for the grooved ball bearing/input shaft to approximately 100 °C (212 °F) for approximately 10 minutes using a Hot Air Blower , for example, Hot Air Blower - VAG1416- .

– Remove the transmission housing from the clutch housing in direction of -arrow- using Slide Hammer Set - Hammer - VW771/1- .

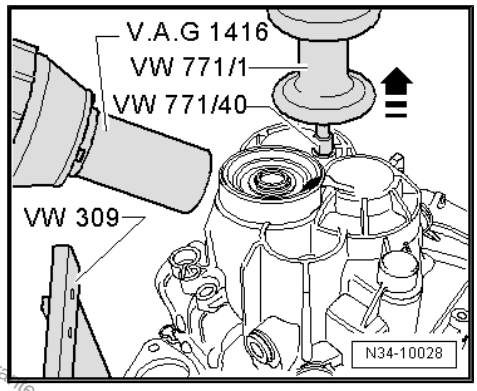

Note

If necessary, carefully pry up all around and alternating between sides on protruding flange. Be careful not to damage the sealing surfaces.

– Remove the washer -1- from the grooved ball bearing -2-, if equipped.

– If transmission is replaced, see if the washer must be reinstalled. Refer to ⇒ page 242 .

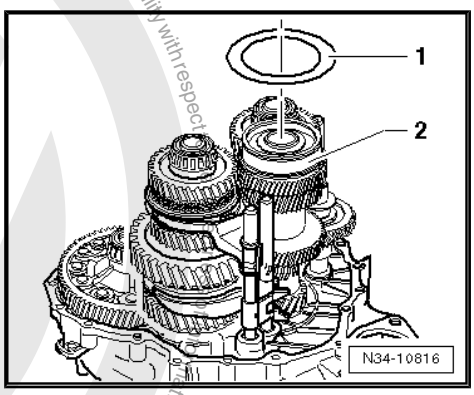

– Remove the Separating Tool -A- and the Press Piece - Multiple Use - VW455- (illustration) or the Press Piece - Front Wishbone - 3160- from the input shaft.

A second technician is needed to help remove the shafts from the clutch housing.

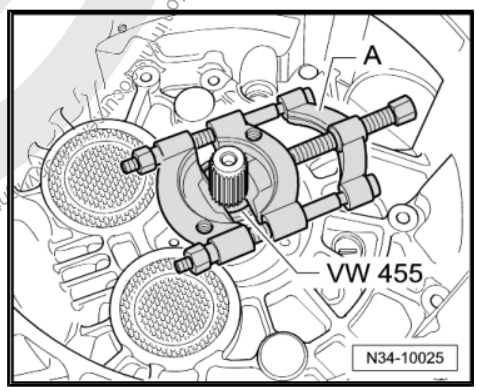

Protected by copyright. Copying for private or commercial purposes, in part or in whole, is not permitted unless authorised by Volkswagen AG. Volkswagen AG does not guarantee or accept any liability with respect to the accuracy of the information in this document.
Copyright by Volkswagen AG.

– Lift the differential -1- with the left hand. With the right hand, left the output shaft for 1st to 4th gear together with the shift rods -2- -arrow A-.

– At the same time, the 2nd technician lifts the input, reverse and output shaft for 5th/6th gear -3- together with the selector rods out of the clutch housing -arrow B-.

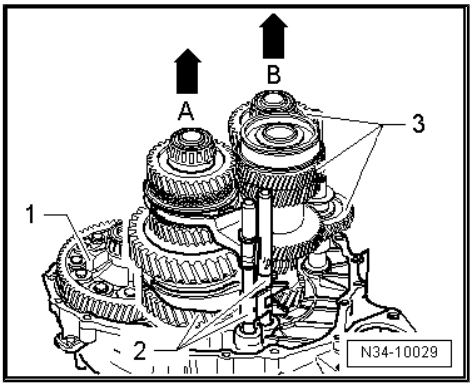

Note

If necessary, differential can be shifted again in clutch housing after lifting shafts.

– Remove the input shaft seal.

Note

Always replace the grooved ball bearing on the input shaft -item 6- ⇒ Item 6 (page 311) .

Protected by Copyright. Copyright by Volkswagen AG. Volkswagen AG does not guarantee or accept any liability with respect to the correctness of information in this document. Copying for private or commercial purposes, in part or in whole, is not permitted unless authorised by Volkswagen AG.

Assembling

• A new grooved ball bearing is pressed onto the input shaft -item 6- ⇒ Item 6 (page 311) .

– Install the input shaft -1-, the 5th/6th gear and reverse gear output shaft -2- the gearshift rod -3-, the shift fork -4- and the reverse shaft -5-.

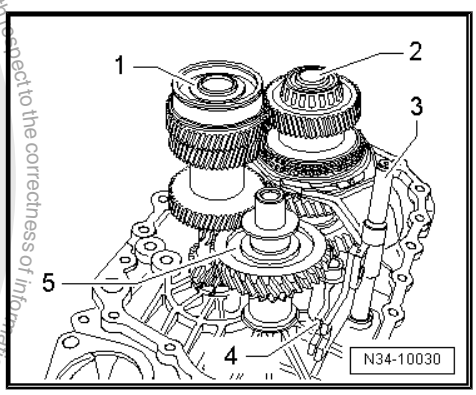

– Then install the differential -1-.

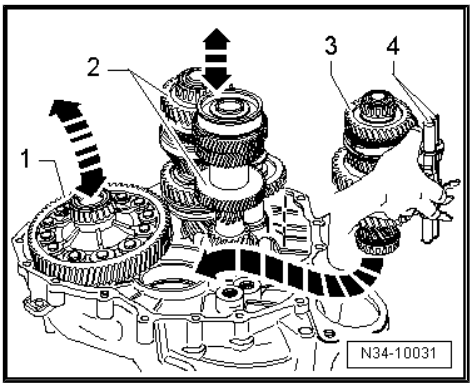

Note

A second technician is needed to help install the shafts into the clutch housing.

– Hold the output shaft for 1st through 4th gear -3- and the gear-shift rods -4- with the right hand.

– Lift the differential -1- slightly with the left hand.

– Have the second technician lift the input shaft, the 5th/6th gear output shaft and reverse gear -2- together with the reverse shaft slightly at the same time.

– Install the 1st to 4th gear output shaft in direction of -arrow-.

• Places of input shaft, output shafts and final drive gear/differential must engage.

– Together with a second technician, now displace shafts and differential in their bearing seats.

– Secure the Bracket - Multiple Use - 30-211A- for the input shaft on the clutch housing.

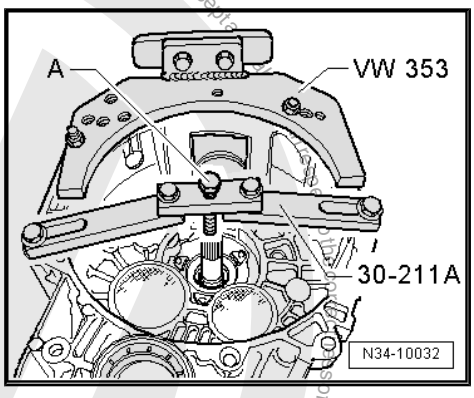

Note

The clutch housing is shown in the illustration rotated 180°.

– Install the bolt -A- just far enough until the input shaft starts to lift.

With Some Transmissions, there are Flattened Sides -A- on the input Shaft Grooved Ball Bearing and on the Bearing Mount -B-.

Check the input shaft grooved ball bearing and the transmission housing.

Input Shaft Grooved Ball Bearing and Transmission Housing
No flattened sides on the grooved ball bearing -A- and bearing mount -B-. Refer to ⇒ page 242
Flattened sides on the grooved ball bearing -A- and bearing mount -B-. Refer to ⇒ Fig. ""On Some Transmissions"" , page 243

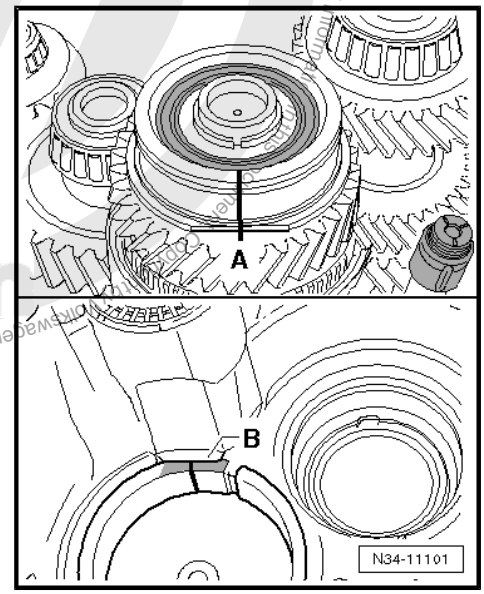

From Transmission Build Date 4.10.06 through Approximately 1.21.08

One Washer Each Is Inserted above and below the Input Shaft Grooved Ball Bearing -item 6- ⇒ Item 6 (page 311) .

Upper washer	Outer circumference	78.6 mm
Lower washer	Outer circumference	85 mm

Measure the Shoulder Above the Grooved Ball Bearing Mount.

Shoulder Above Grooved Ball Bearing	Dimension "a"	Upper Washer
Through transmission build date 4/9/06	10 mm	no
From transmission build date 10 04 6	10.7 mm	yes

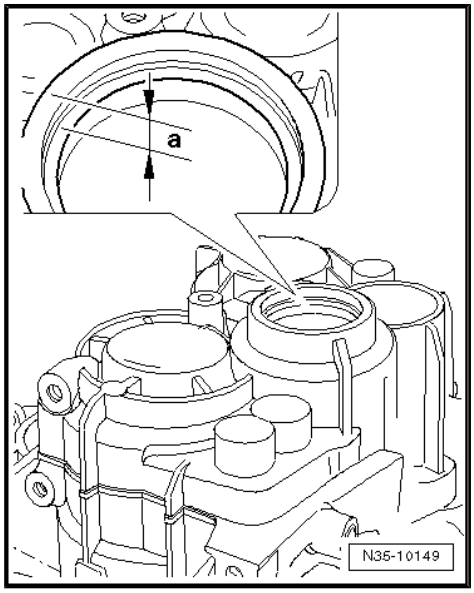

The Area Under the Grooved Ball Bearing Seat in the Transmission Housing Has Been Changed -arrow-

Area Below the Bearing Seat		Lower Washer
Through transmission build date 4/9/06	not deeper.	no
From transmission build date 10 04 6	slightly deeper.	yes

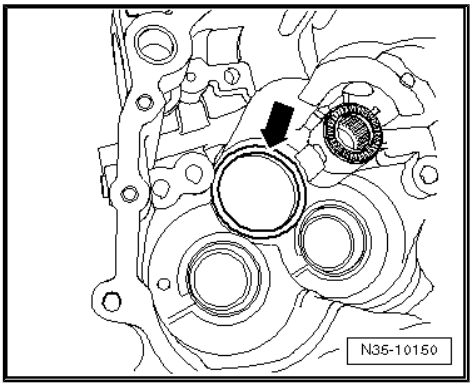

– Place a washer (85 mm outer circumference) -1- on the grooved ball bearing -2-.

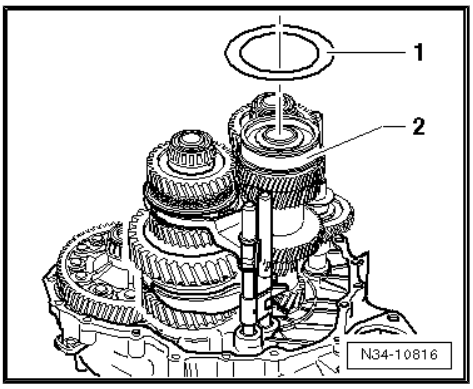

On Some Transmissions

Flattened Areas -A- on the Input Shaft Grooved Ball Bearing and Bearing Mount -B-.

- Do not place any washers above and below the grooved ball bearing.
- The flattened sides -A- on the grooved ball bearing and on the bearing mount -B- must align in the transmission housing.

– Mark the flattened side with color.

– Transfer the markings to the upper area of the grooved ball bearing and to the upper area of the transmission housing bearing mount (⇒ next figure).

– Heat the transmission housing in the area near the bearing seat for the grooved ball bearing/input shaft to approximately 100 °C (212 °F) for approximately 10 minutes using a Hot Air Blower , for example, Hot Air Blower - VAG1416- .

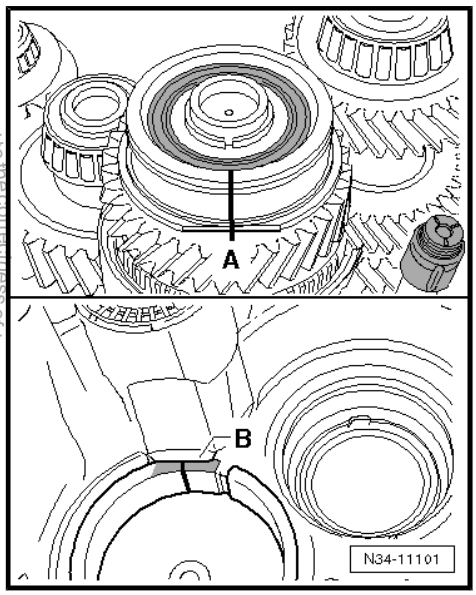

Protected by copyright. Copying for private or commercial purposes, in part or in whole, is not permitted unless authorised by Volkswagen AG. Volkswagen AG does not guarantee or accept any liability with respect to the correctness of information in this document. Copyright by Volkswagen AG.

Note

- *It is necessary to heat the transmission housing so that the grooved ball bearing is not damaged when the housing is being installed.*
- *Align the marking on the grooved ball bearing -A- with the marking on the transmission housing -B- and mount the transmission housing.*

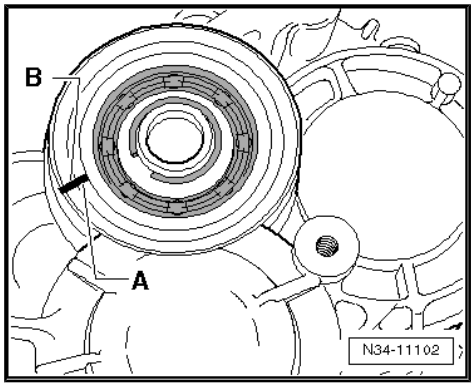

– For all transmissions heat the transmission housing with Hot Air Blower - VAG1416- for example the Hot Air Blower - VAG1416- in the grooved ball bearing/input shaft bearing set area to 100 °C (212 °F) for approximately 10 minutes.

– Apply Sealing Paste - AMV 188 200 03- evenly onto the sealing surface of the clutch housing.

– Install the transmission housing and tighten the new bolts -A-, -B and C- to the tightening specification.

If the steel bolts (out hex head) are the replacement part, pay attention to the allocation:

A - Bolt with permanent washer

B - Bolt without washer

C - Bolt with permanent washer

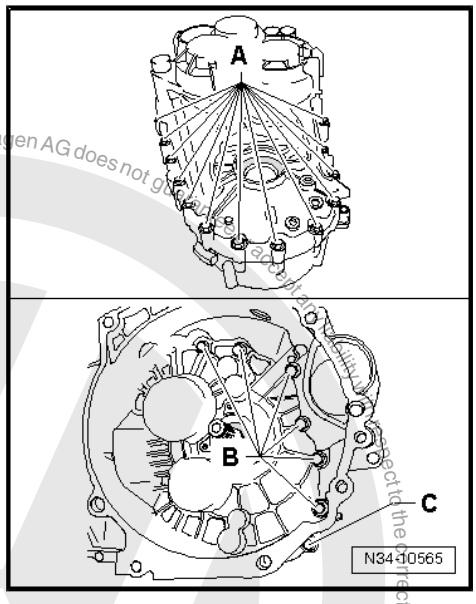

– If a washer was mounted on the grooved ball bearing before installation, then a washer -1- (outer diameter = 78.6 mm) must be installed after installation -2-. Refer to ⇒ page 242 .

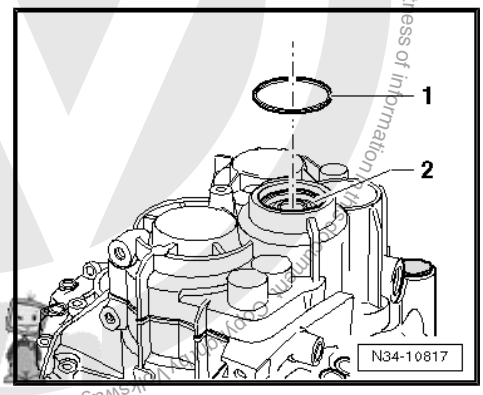

Protected by copyright. Copying for private or commercial purposes, in part or in whole, is not permitted unless authorised by Volkswagen AG. Volkswagen AG does not guarantee or accept any liability with respect to the correctness of information in this document. Copyright by Volkswagen AG.

Protected by copyright. Copyright by Volkswagen AG. Volkswagen AG does not guarantee or accept any liability with respect to the correctness of information in this document. Copyright by Volkswagen AG. Unauthorised reproduction, in whole or in part, is not permitted. Unauthorised use for commercial purposes, in part or in whole, is not permitted.

– Install the grooved ball bearing/input shaft locking ring -1-.
– Remove the Bracket - Multiple Use - 30-211A- for the input shaft.
– Install the selector shaft lock sleeve all the way onto the tool. Refer to ⇒ Fig. ""Lock Sleeve Differentiation"" , page 266 .
– Turn the transmission with opening for selector shaft in assembly stand upward.

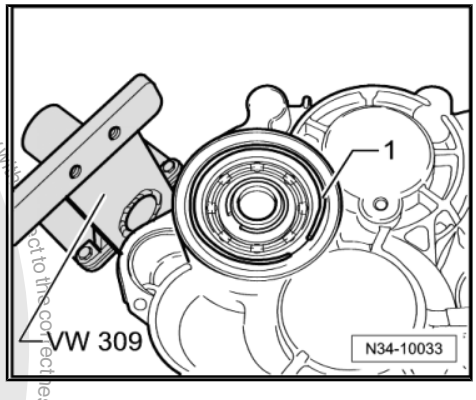

Note

Use the Pry Lever - 80-200- to press against the spring force of the securing bushing direction of -arrow- when installing so that the gearshift shaft -1- does not touch the securing bushing -2- when removing.

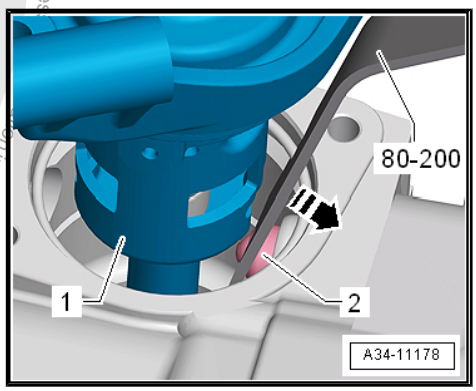

– Install the gearshift shaft -1- into the lower bearing -2- and into the shift forks -3-.

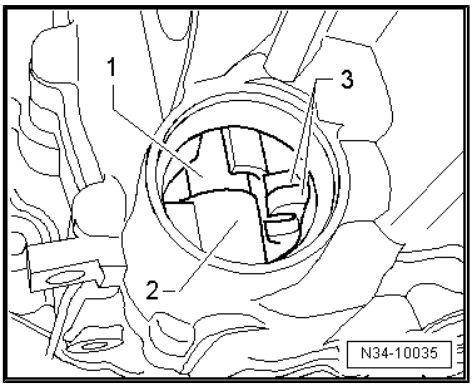

Note

The cover is not shown in the illustration -item 2-
⇒ Item 2 (page 262) .

– Push the gearshift shaft -1- against the retaining sleeve -2- in direction of -arrow- and guide is through the shift fork all the way down using the shift finger -3-.

- The gearshift cover -4- must stand parallel to the bolting surface on the transmission housing.
- It must be possible to move the gearshift shaft easily (forward and backward).

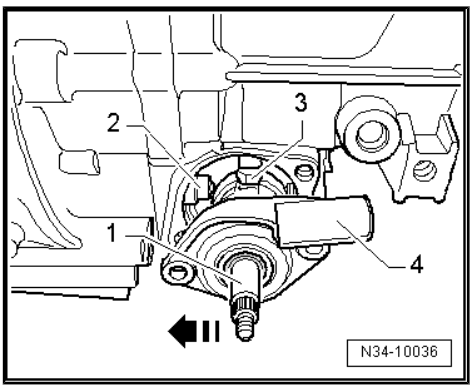

Note

If the gearshift cover is at an angle to the bolting surface, then the gearshift shaft is not installed into the lower bearing.

– Tighten the bolts -3- on the cover/gearshift shaft -4-.
– Install the locking bolt -2-, lock elbow -arrow- must not be installed when doing so.
– Install the Back-Up Lamp Switch - F4- -1-.

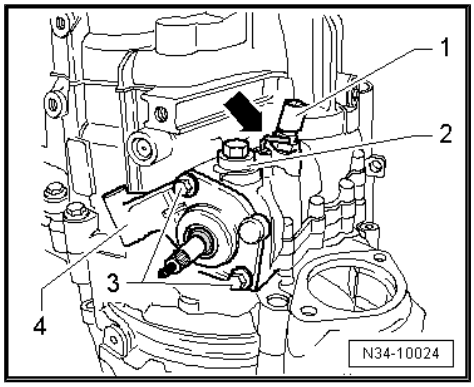

– Install the input shaft seal.

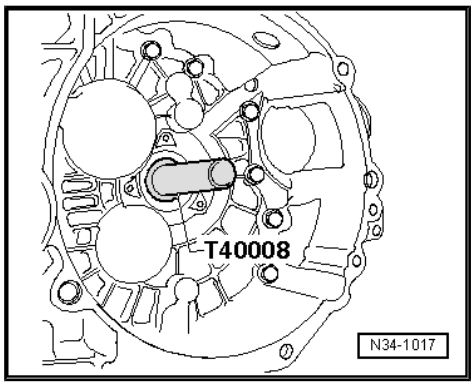

– Install clutch slave cylinder with release bearing and tighten bolts -arrows- to tightening specification -item 4-
⇒ Item 4 (page 50) .
– Move the gearshift lever (selector lever) through all the gears.

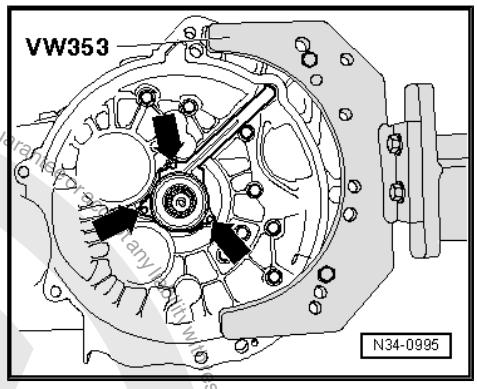

– Drive the cap into transmission housing to all the way in the Seal Installer - Crankshaft - T10042- .

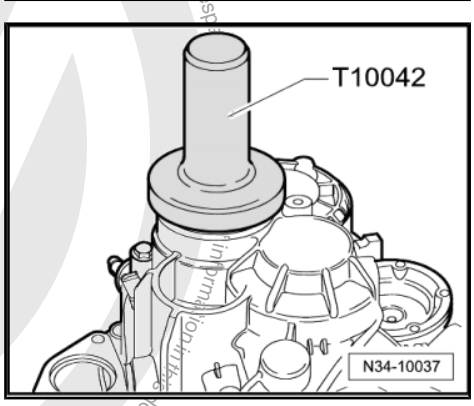

Protected by copyright. Copying for private or commercial purposes, in part or whole, is not permitted unless authorised by Volkswagen AG. Volkswagen AG does not guarantee or accept any liability with respect to the correctness and completeness of this document. Copyright by Volkswagen AG.

– Install the left flange shaft and pressure spring, the thrust washer and the tapered ring.

Transmission for FWD

– Install the right flange shaft and pressure spring, the thrust washer and the tapered ring.

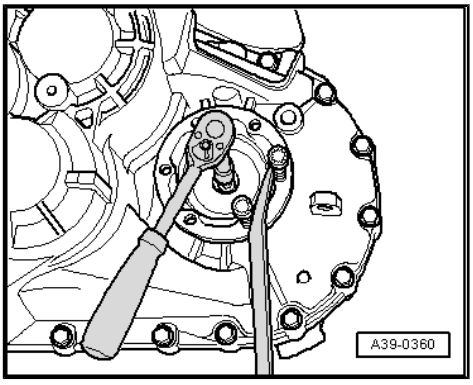

AWD Transmission

Install the bevel box into the manual transmission as follows:

– With a manual transmission, lubricate the differential splines with Grease for Clutch Disc Shaft Splines - G 000 100- .
– Slide on bevel box completely on manual transmission, while doing this, join splines of input shaft/bevel box centrally with differential.
– Bring the right driveshaft splines and the differential bevel gear into alignment. Rotate the flange shaft if necessary.
– With proper tooth position and central guiding, bevel box slips up to stop against manual transmission.

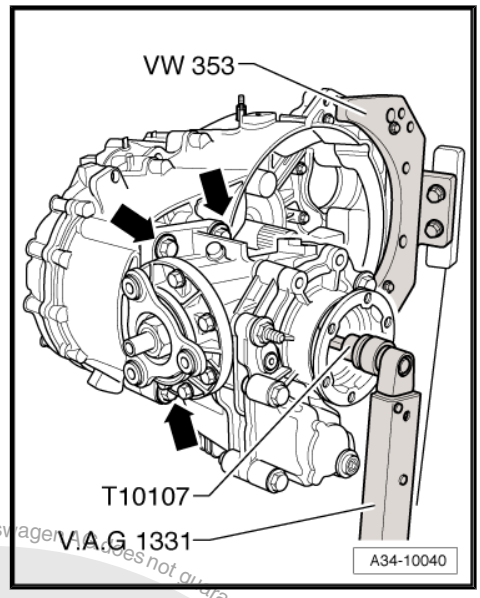

Note

Do not pull bevel box with mounting bolts against the transmission. Otherwise bevel box is canted and mounting eyelets can break off.

– Tighten the 4 bevel box connecting bolts -arrows- (only 3 are shown in illustration) at manual transmission.
– Tighten the bolt for the right flange shaft with the Socket Wrench for example Socket And Extended Bit - T10107A- .

11.9 Assembly Sequence: I = Transmission »with« a Securing Ring -A- for the Metal Cover for the Input Shaft; II = Transmission with Plastic Cover for Input Shaft

The Plastic Cover for the Input Shaft Does Not Require the Securing Ring -A-.

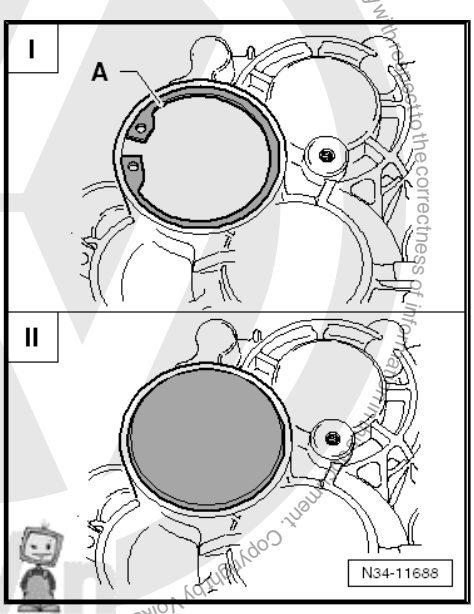

Special tools and workshop equipment required

♦ Holding Plate - VW309A-

Protected by copyright. Copying for private or commercial purposes, in part or in whole, is not permitted unless authorised by Volkswagen AG. Volkswagen AG does not guarantee or accept any liability with respect to the correctness of information. Copyright by Volkswagen AG.

- Holding Fixture - VW313-
- Transmission Support - VW353-
- Press Piece - Multiple Use - VW455- or Press Piece - Front Wishbone - 3160-
- Slide Hammer Set - VW771-
- Puller - Kukko Internal - 12-16mm - 21/1-
- Puller - Kukko Quick Action Separating Tool - 5-60mm - 17/0-
- Puller - Kukko Counterstay - Kukko 22/1-
- Bracket - Multiple Use - 30-211A-
- Seal Installer - Drive Flange - T10143- or Seal Installer - Output Shaft Oil Seal - T10180-
- Locking Sleeve Drift - T10169-
- or Locking Sleeve Drift - T10362-
  ⇒ Fig. ""Lock Sleeve Differentiation"" , page 266
- Seal Installer - Driveshaft - T40008-
- Torque Wrench 1331 5-50Nm - VAG1331-
- Hot Air Blower - VAG1416-
- Shop Crane - Drip Tray - VAS6208-
- Socket And Extended Bit - T10107A-
- Sealing Compound - AMV 188 200 03-

Disassembling

– Attach the transmission to the assembly stand with bolts -arrows-.

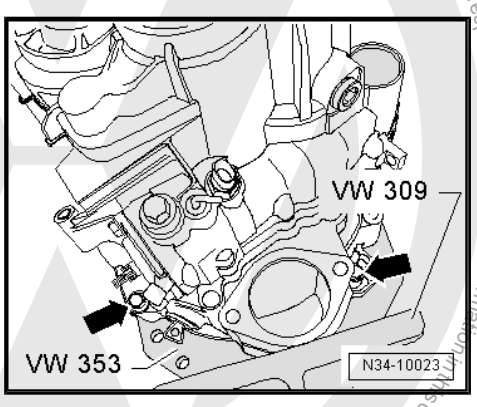

Note

If one of the fastening holes does not touch the Transmission Support place shims between the hole and the Transmission Support .

– Turn the transmission in the assembly stand so that the drain plug is facing down.

– Place the Drip Tray underneath.

– Drain gear oil from manual transmission.

Protected by copyright. Copying for private or commercial purposes, in part or in whole, is not permitted unless authorised by Volkswagen AG. Volkswagen AG does not guarantee or accept any liability with respect to the correctness of information in this document. Copyright by Volkswagen AG.

AWD Transmission

– Remove the bolt for the right flange shaft with the Socket Wrench for example Socket And Extended Bit - T10107A- .

– Remove the four bolts -arrows- (only three bolts are shown in the illustration) that attach the bevel box to the transmission.

– Carefully press bevel box off manual transmission while protecting it against falling through.

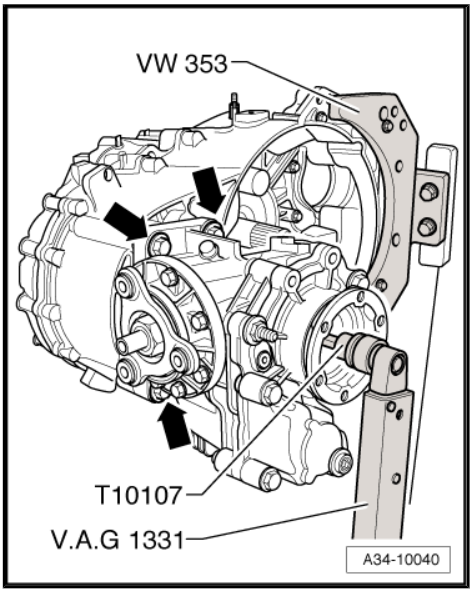

Transmission for FWD

– Remove the right flange shaft (the illustration shows the left flange shaft).

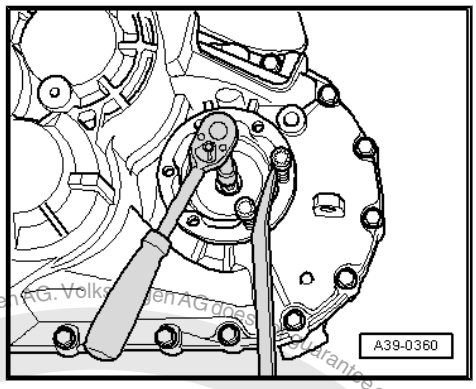

Continuation for All

– Remove the clutch slave cylinder with the release bearing -arrows-.

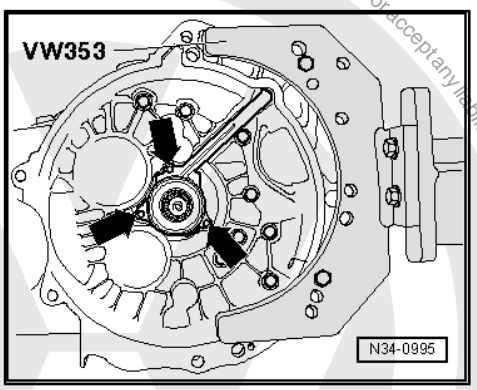

– Transmission on vehicles with Stop/Start system: remove the Transmission Neutral Position Sensor - G701- -arrow-.

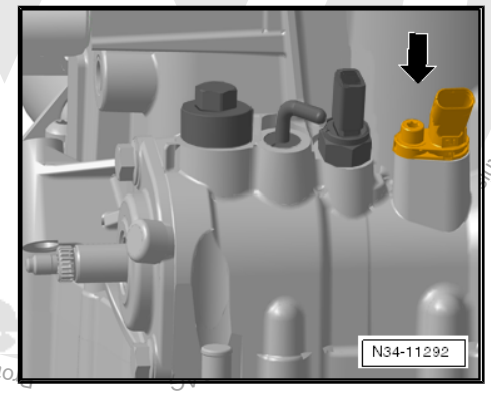

Protected by copyright. Copying for private or commercial purposes, in part or in whole, is not permitted unless authorised by Volkswagen AG. Volkswagen AG does not guarantee or accept any liability with respect to the correctness of information in this

Make Sure the Gearshift Shaft Is Not Blocked By the Lock Elbow -arrow-.

– Move the gearshift shaft into neutral.
– Remove the Back-Up Lamp Switch - F4- -1-.
– Remove the locking bolt -2-.
– Then remove the bolts -3-.
– Remove selector shaft with shift cover -4- from transmission housing.

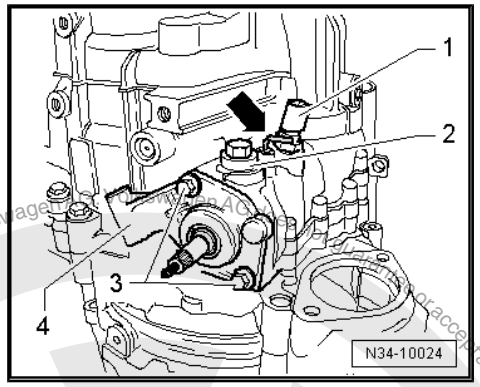

Note

Use the Pry Lever - 80-200- to press against the spring force of the securing bushing in direction of -arrow- so that the gearshift shaft -1- does not touch the securing bushing -2- when removing.

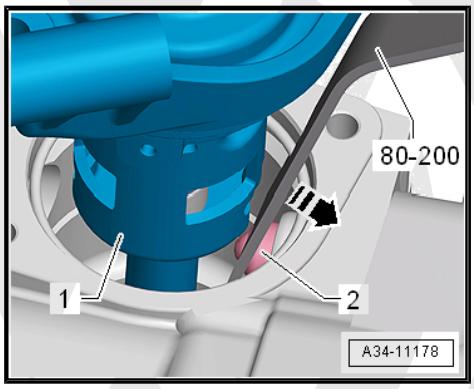

– Remove the left flange shaft bolt. To do this, install two bolts into the flange and counterhold the flange using a pry bar.
– Remove the left flange shaft and the pressure spring.

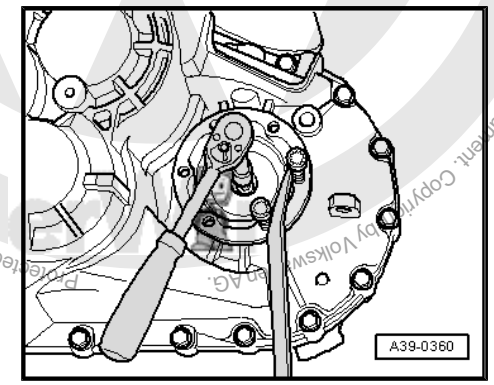

– Remove the bolts -B- that connect the clutch housing to the transmission housing.

Note

One bolt -arrow- is located outside of the bolting flange.

– Secure the input shaft as follows:

The Stub Shaft Splines on the Input Shaft has Different Lengths on the Transmission.

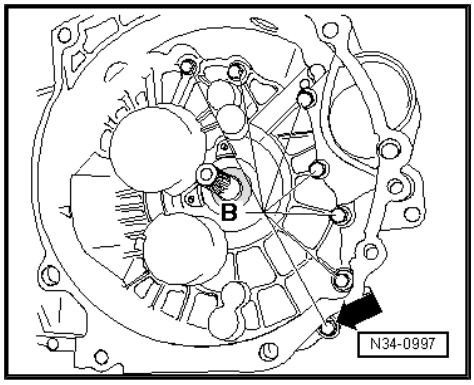

Protected by copyright. Copying for private or commercial purposes, in part or whole, is not permitted unless authorised by Volkswagen AG. Volkswagen AG does not guarantee or accept any liability with respect to the correctness of information in this document. Copyright by Volkswagen AG.

Protected by copyright. Copying for private or commercial purposes, in part or in whole, is not permitted unless authorised by Volkswagen AG. Volkswagen AG does not guarantee or accept any liability with respect to the correctness of information in this document. Copyright by Volkswagen AG.

– Either place the Press Piece - Multiple Use - VW455- over the input shaft on the clutch housing.

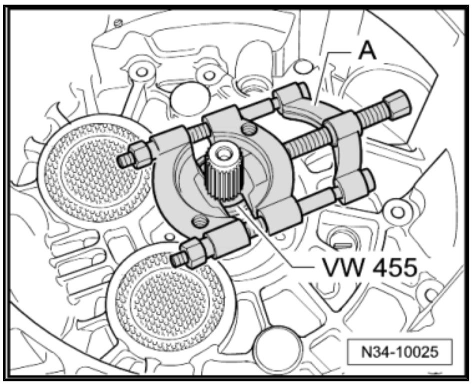

– Or place the Press Piece - Front Wishbone - 3160- over the input shaft on the clutch housing.

– Tension the Separating Tool -A-, for example Puller - Kukko Quick Action Separating Tool - 5-60mm - Kukko 17/0- , tightly behind the splines on the input shaft.

The back of the Separating Tool - 5-60mm must touch the Press Piece - Multiple Use - VW455- or the Press Piece - Front Wishbone - 3160- free-of-play.

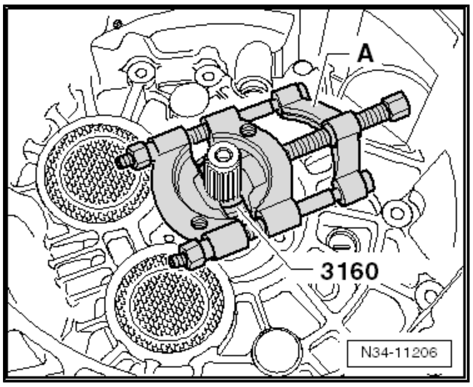

Metal Cover

– Remove the cap/input shaft circlip -A-.

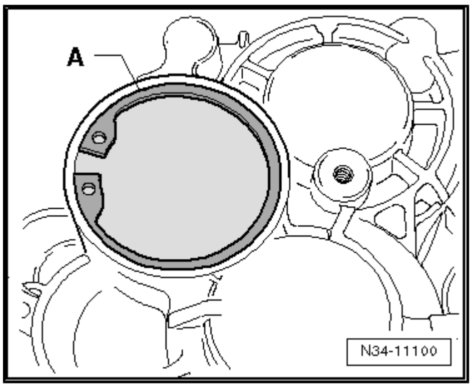

– Pierce the rubber piece in the center of the cover -C- using a Screwdriver .

– Remove the cover from the transmission housing.

A - Counter Support , for example Puller - Kukko Counterstay - 22/1-

B - Internal Puller 8 to 12 mm , for example Puller - Kukko Internal - 12-16mm - 21/1-

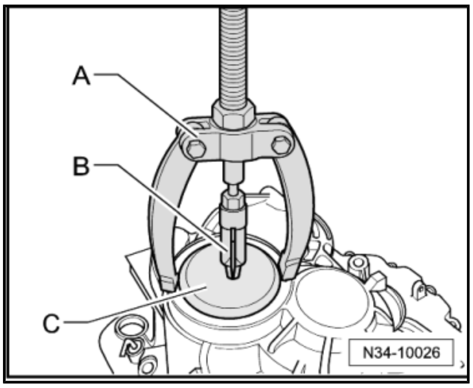

Plastic Cover

Carefully remove all tabs -A-. Do not damage the transmission housing when doing so.

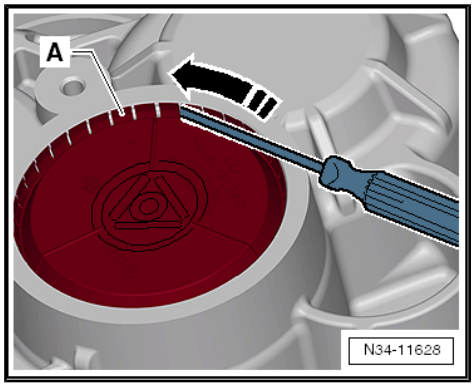

– Pry out the cover.

• Ensure that the individual cover parts are removed as necessary.

Continuation for All

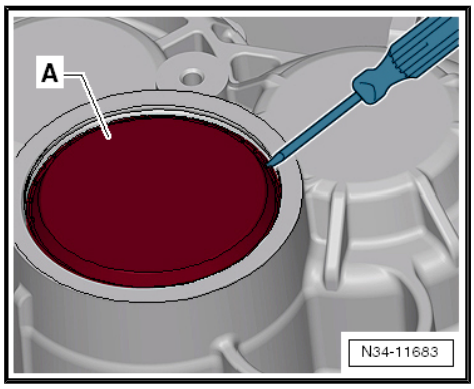

Remove the locking ring -C- from the grooved ball bearing on the input shaft/transmission housing as follows:

– Hold one end of the locking ring secure using the Screwdriver -A-.

– Pry the other end out of the groove in the grooved ball bearing in direction of -arrow- using the screwdriver -B-.

– Pry out the rest of the locking ring using the Screwdriver -B-.

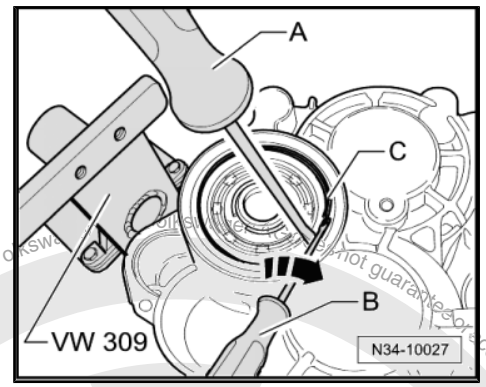

– Remove the bolts -A- that attach the transmission housing to the clutch housing.

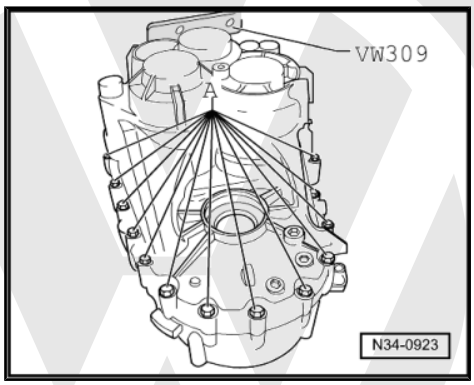

Protected by copyright. Copying for private or commercial purposes, in part or in whole, is not permitted unless authorised by Volkswagen AG. Copyright by Volkswagen AG. We do not guarantee or accept any liability with respect to the correctness of information in this document.

– Install Slide Hammer Set - Adapter 40 - VW771/40- into the threaded hole in the transmission housing.

– Heat the transmission housing in the area near the bearing seat for the grooved ball bearing/input shaft to approximately 100 °C (212 °F) for approximately 10 minutes using a Hot Air Blower , for example, Hot Air Blower - VAG1416- .

– Remove the transmission housing from the clutch housing in direction of -arrow- using Slide Hammer Set - Hammer - VW771/1- .

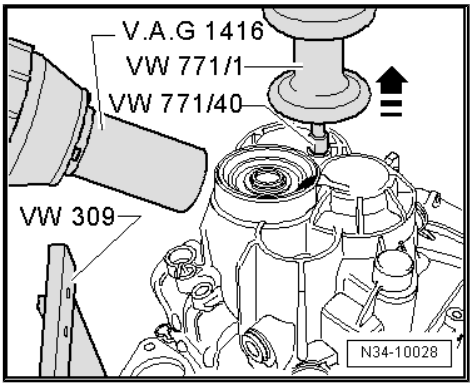

Note

If necessary, carefully pry up all around and alternating between sides on protruding flange. Be careful not to damage the sealing surfaces.

– Remove the Separating Tool -A- and the Press Piece - Multiple Use VW455 or the Press Piece - Front Wishbone - 3160- from the input shaft.

A second technician is needed to help remove the shafts from the clutch housing.

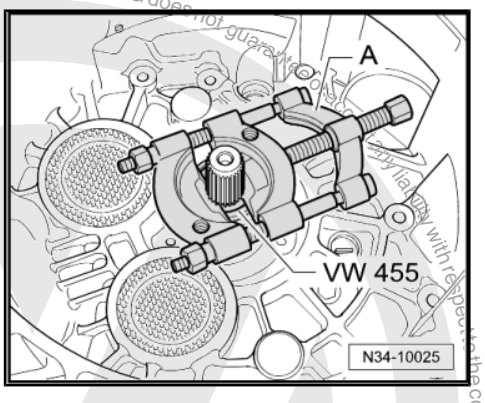

– Lift the differential -1- with the left hand. With the right hand, lift the output shaft for 1st to 4th gear together with the gearshift rods -2- -arrow A-.

– At the same time, the 2nd technician lifts the input, reverse and output shaft for 5th/6th gear and reverse gear -3- together with the selector rods out of the clutch housing -arrow B-

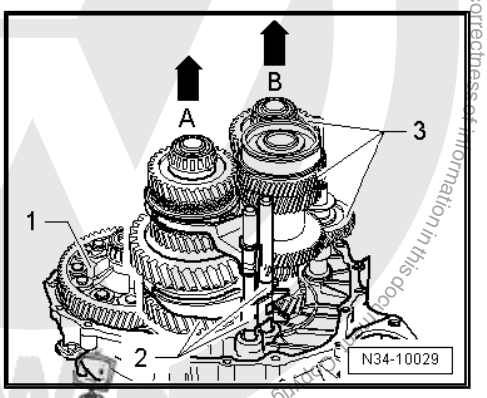

Note

If necessary, differential can be shifted again in clutch housing after lifting shafts.

– Remove the input shaft seal.

Note

Always replace the grooved ball bearing on the input shaft -item 6- ⇒ Item 6 (page 311) .

Assembling

- A new grooved ball bearing is pressed onto the input shaft -item 6- ⇒ Item 6 (page 311) .

Protected by copyright. Copying for private or commercial purposes, in part or in whole, is not permitted unless authorised by Volkswagen AG. Volkswagen AG does not guarantee or accept any liability with respect to the correctness of information in this document. Copyright by Volkswagen AG.

– Install the input shaft -1-, the 5th/6th gear and reverse gear output shaft -2-, the gearshift rod -3-, the reverse gear shift fork -4- and reverse shaft -5-.

Pay Attention to the Different Bearing for the Reverse Gear Shift Fork.

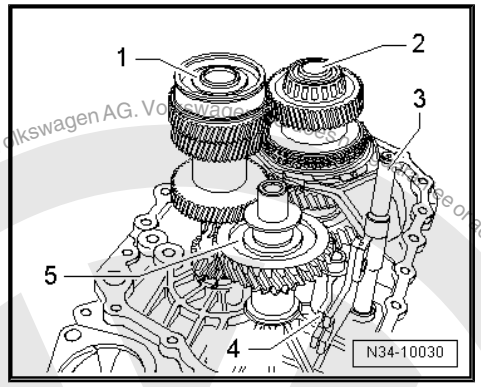

The Reverse Gear Shift Fork -1- is Mounted on the Axle -2- behind the 5th and 6th Gear Shift Rod -3-.

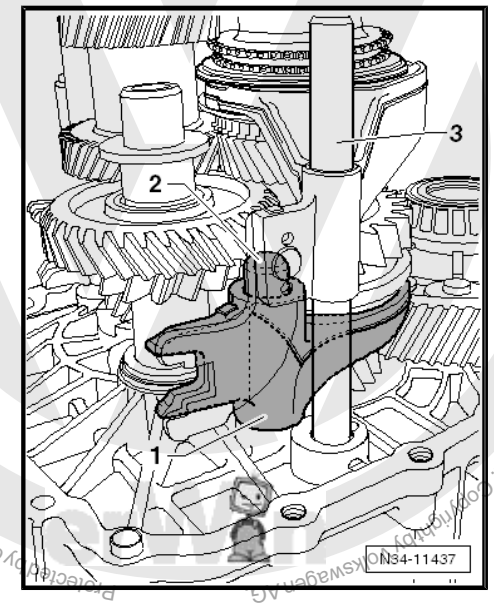

The Reverse Gear Shift Fork -1- is Mounted on the Gearshift Rod with the 5th and 6th Gear Shift Fork -2-.

Continuation for All

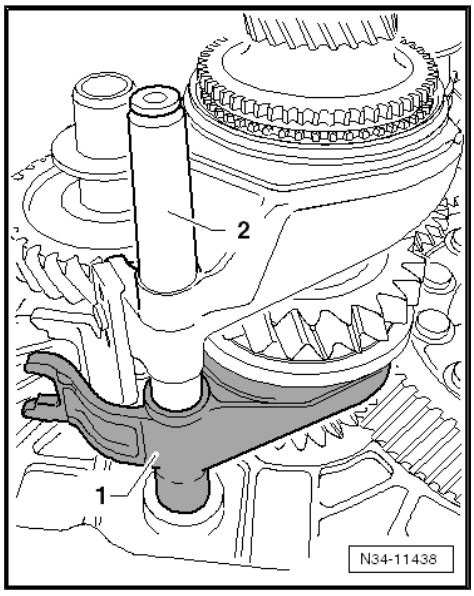

Protected by copyright. Copying for private or commercial purposes, in part or in whole, is not permitted unless authorised by Volkswagen AG. Volkswagen AG does not guarantee or accept any liability with respect to the correctness of information in this document. Copyright by Volkswagen AG.

– Then install the differential -1-.

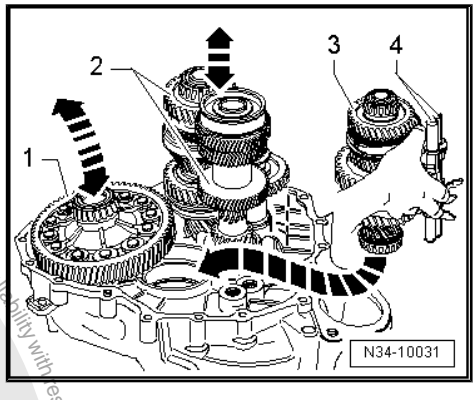

Note

A second technician is needed to help install the shafts into the clutch housing.

– Hold the output shaft for 1st through 4th gear -3- and the gear-shift rods -4- with the right hand.

– Slightly lift the differential with the left hand.

– Have the second technician lift the input shaft, the 5th/6th gear output shaft and reverse gear -2- together with the reverse shaft slightly at the same time.

– Install the 1st to 4th gear output shaft in direction of -arrow-.

– Places of input shaft, output shafts and final drive gear/differential must engage.

– Together with a second technician, now displace shafts and differential in their bearing seats.

– Secure the Bracket - Multiple Use - 30-211A- for the input shaft to the clutch housing.

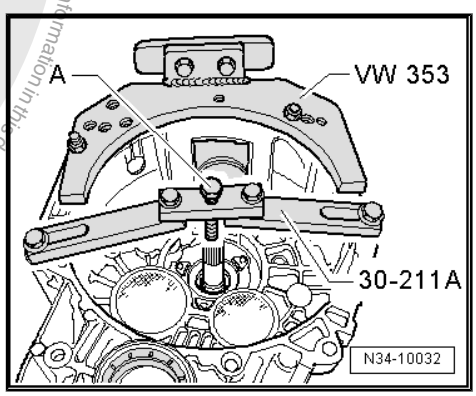

Note

The clutch housing is shown in the illustration rotated 180°.

– Install the bolt -A- just far enough until the input shaft starts to lift.

The Grooved Ball Bearing/Input Shaft Only Fits in One Position in the Transmission Housing.

There is a flattened area on the grooved ball bearing and the bearing mount.

- If the flattened areas -A and B- are present, do not insert any washers above and below the grooved ball bearing. Refer to ⇒ “1.2.1 Grooved Ball Bearing Changes”, page 315 .
- The flattened sides -A- on the grooved ball bearing and on the bearing mount -B- must align in the transmission housing.

– Mark the flattened side with color.

– Transfer the markings to the upper area of the grooved ball bearing and to the upper area of the transmission housing bearing mount (⇒ next figure).

– Heat the transmission housing in the area near the bearing seat for the grooved ball bearing/input shaft to approximately 100 °C (212 °F) for approximately 10 minutes using a Hot Air Blower , for example, Hot Air Blower - VAG1416- .

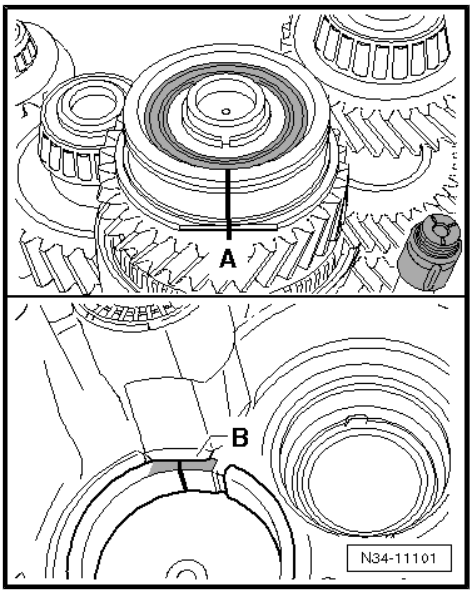

Protected by copyright. Copying for private or commercial purposes, in part or in whole, is not permitted unless authorized by Volkswagen AG. Volkswagen AG does not guarantee or accept any liability with respect to the correctness of information in this document. Copyright by Volkswagen AG.

Note

- *It is necessary to heat the transmission housing so that the grooved ball bearing is not damaged when the housing is being installed.*
- *Apply Sealing Paste - AMV 188 200 03- evenly onto the sealing surface of the clutch housing.*
- *Align the marking on the grooved ball bearing -A- with the marking on the transmission housing -B- and mount the transmission housing.*

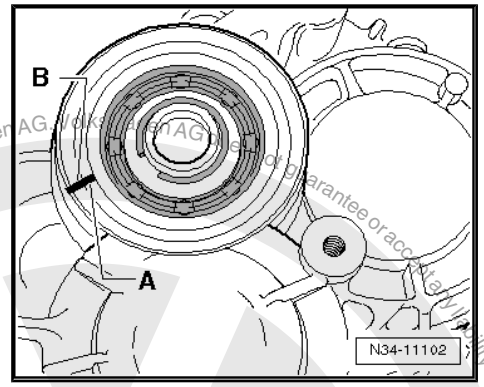

– Install the transmission housing and tighten the new bolts -A, B and C- to the tightening specification.

If the steel bolts (out hex head) are the replacement part, pay attention to the allocation:

A - Bolt with permanent washer

B - Bolt without washer

C - Bolt with permanent washer

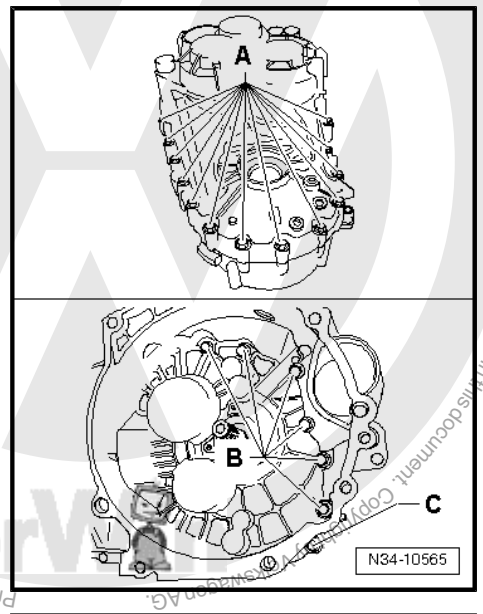

– Install the grooved ball bearing/input shaft locking ring -1-.

– Remove the Bracket - Multiple Use - 30-211A- for the input shaft.

– Install the selector shaft lock sleeve all the way onto the tool. Refer to ⇒ Fig. ""Lock Sleeve Differentiation"" , page 266 .

– Turn the transmission with opening for selector shaft in assembly stand upward.

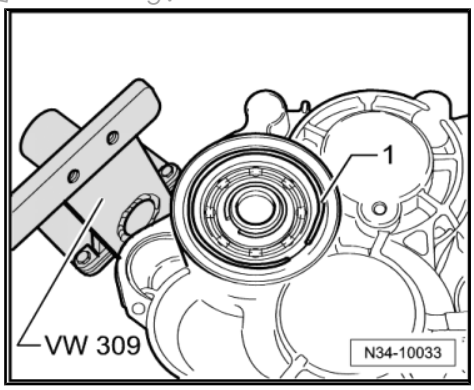

Note

Use the Pry Lever - 80-200- to press against the spring force of the securing bushing direction of -arrow- when installing so that the gearshift shaft -1- does not touch the securing bushing -2- when removing.

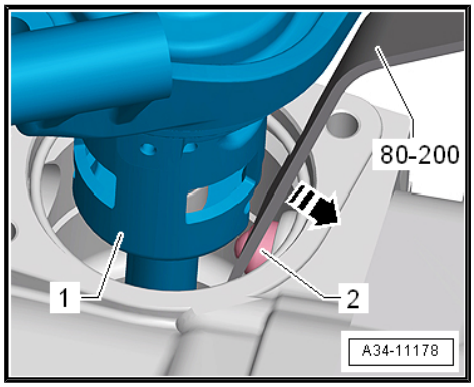

Protected by copyright. Copying for private or commercial purposes, in part or in whole, is not permitted unless authorised by Volkswagen AG. Volkswagen AG does not guarantee or accept any liability with respect to the correctness of information in this document. Copyright by Volkswagen AG.

– Install the gearshift shaft -1- into the lower bearing -2- and into the shift forks -3-.

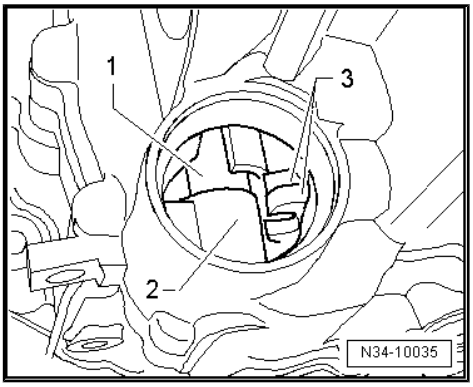

Note

The cover is not shown in the illustration -item 2-
⇒ Item 2 (page 262) .

– Push the gearshift shaft -1- against the retaining sleeve -2- in direction of -arrow- and guide is through the shift fork all the way down using the shift finger -3-.

- The gearshift cover -4- must stand parallel to the bolting surface on the transmission housing.
- It must be possible to move the gearshift shaft easily (forward and backward).

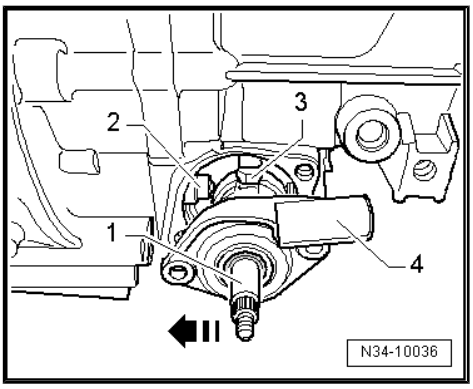

Note

If the gearshift cover is at an angle to the bolting surface, then the gearshift shaft is not installed into the lower bearing.

– Tighten the bolts -3- on the gearshift cover -4-.
– Install the locking bolt -2-, lock elbow -arrow- must not be installed when doing so.
– Install the Back-Up Lamp Switch - F4- -1-.

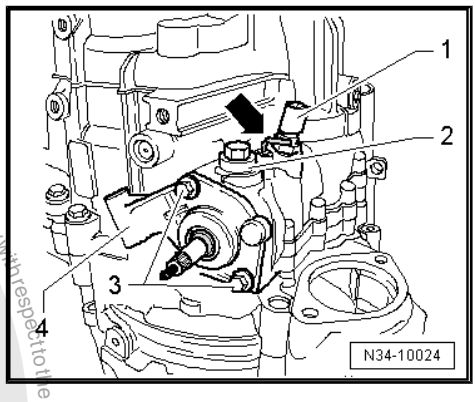

– Transmission on vehicles with Start/Stop System: Install the Transmission Neutral Position Sensor - G701- -arrow- and tighten the bolt to 6 Nm.

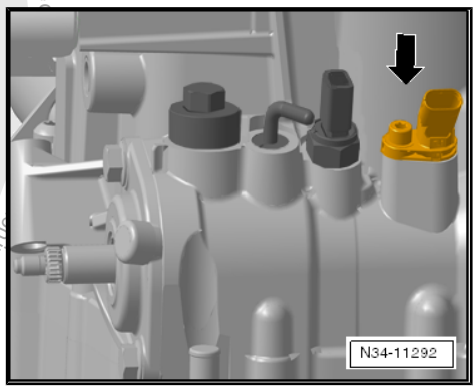

Protected by copyright. Copying for private or commercial purposes, in part or in whole, is not permitted unless authorised by Volkswagen AG. Volkswagen AG does not guarantee or accept any liability with respect to the correctness of information in this document. Copyright by Volkswagen AG.

Protected by copyright. Copying for private or commercial purposes, in part or in whole, is not permitted unless authorised by Volkswagen AG. Volkswagen AG does not guarantee or accept any liability with respect to the correctness of information in this document.

– Install the input shaft seal so that it is flush.
– Install the clutch slave cylinder with release bearing. Refer to ⇒ "2 Clutch Release Mechanism, Servicing", page 50 .
– Move the gearshift lever (selector lever) through all the gears.
– Install the cover as follows:

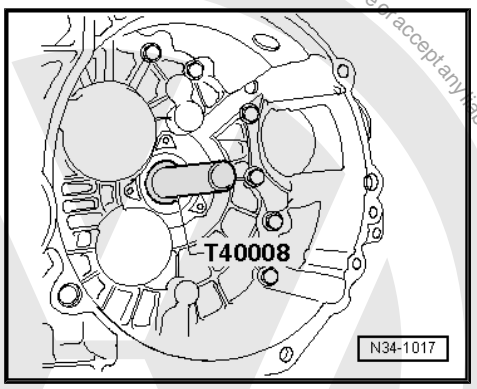

Cover Differentiation

-I- = metal cover; secured with securing ring -A-.

-II- = plastic cover; without securing ring.

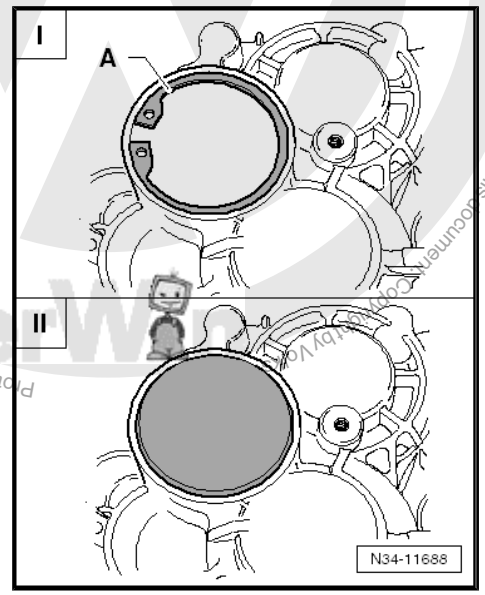

Allocation

Mounting Area for the Cover	Cap	Installation
-Arrow A- = vertical	Made of metal	Refer to ⇒ Fig. ""Metal Cover"", page 259
-Arrow B- = at an angle	Plastic	Refer to ⇒ Fig. ""Plastic Cover"", page 259

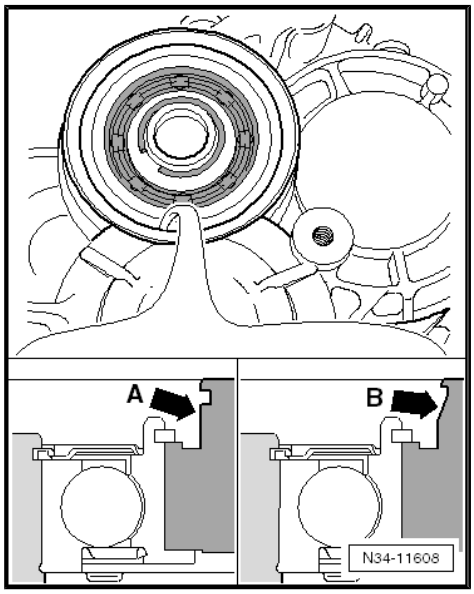

Metal Cover

– Install the cap all the way into the transmission housing.

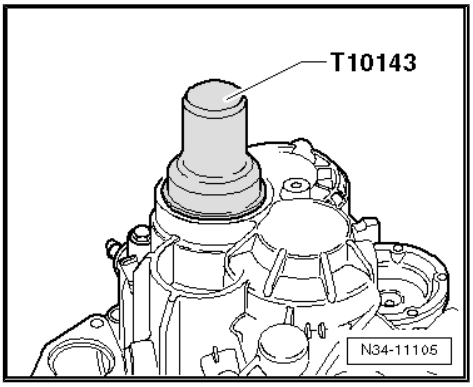

– Secure the cap with the locking ring -A-.

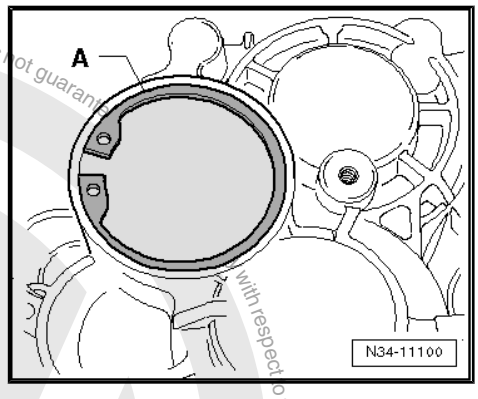

Plastic Cover

– Install the cap all the way into the transmission housing.

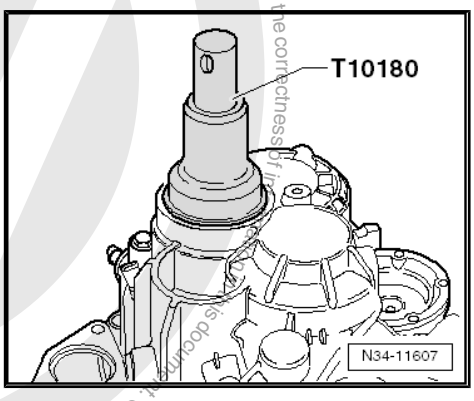

Continuation for All

- Always pay attention to the cover allocation. Refer to ⇒ Fig. ""Allocation"" , page 258 .
- Leaks in the case of incorrect installation.
- Allocate the cap. Refer to the Parts Catalog.

– Install the left flange shaft and pressure spring, the thrust washer and the tapered ring.

Transmission for FWD

– Install the right flange shaft and pressure spring, the thrust washer and the tapered ring.

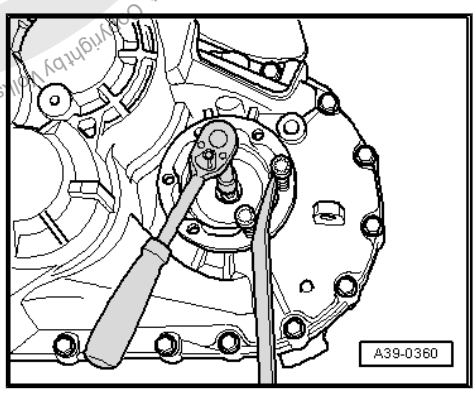

Protected by copyright. Copying for private or commercial purposes, in part or in whole, is not permitted unless authorised by Volkswagen AG. Volkswagen AG does not guarantee or accept any liability with respect to the correctness of information in this document. Copyright by Volkswagen AG.

AWD Transmission

Install the bevel box into the manual transmission as follows:

– With a manual transmission, lubricate the differential splines with Grease for Clutch Disc Shaft Splines - G 000 100- .

– Slide on bevel box completely on manual transmission, while doing this, join splines of input shaft/bevel box centrally with differential.

– Bring the right drive axle splines and the differential bevel gear into alignment. Rotate the flange shaft if necessary.

– With proper tooth position and central guiding, bevel box slips up to stop against manual transmission.

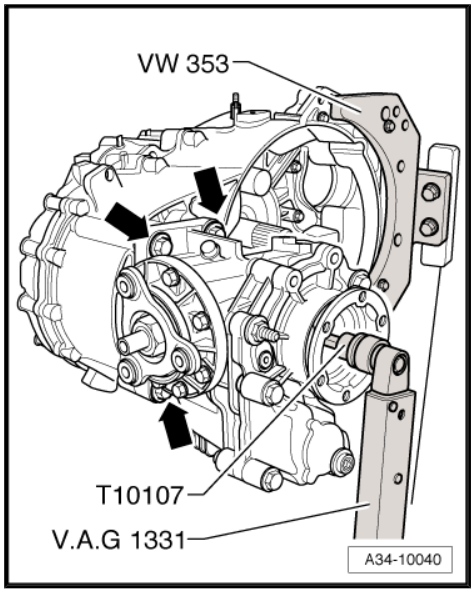

Note

Do not pull bevel box with mounting bolts against the transmission. Otherwise bevel box is canted and mounting eyelets can break off.

– Tighten the 4 bevel box connecting bolts -arrows- (only 3 are shown in illustration) at manual transmission.

– Tighten the bolt for the right flange shaft with the Socket Wrench for example Socket And Extended Bit - T10107A- .

Protected by copyright. Copying for private or commercial purposes, in part or in whole, is not permitted unless authorised by Volkswagen AG. Volkswagen AG does not guarantee or accept any liability with respect to the correctness of information in this document. Copyright by Volkswagen AG.

12 Transmission Housing, Servicing

Special tools and workshop equipment required

- Bearing Driver - Multiple Use - VW244B-
- Transmission Support - VW353-
- Press Plate - VW401-
- Press Plate - VW402-
- Press Piece - Rod - VW407-
- Press Piece - 37mm - VW416B-
- Guide Pin - VW436A-
- Press Piece - Guide Pin - VW439-
- Slide Hammer Set - Hammer - VW771-
- Crankshaft Holding Fixture - VW801-
- Guide Pins - 10-15-
- Press Piece - Pivot Mount Bushing - 3124-
- Bearing Installer - Crankshaft Pilot Bearing - 3264-
- Subframe Support Tool - 3290-
- Torque Wrench 1331 5-50Nm - VAG1331-
- Bushing Driver - Selector Shaft - T10168-
- Locking Sleeve Drift - T10169- or Locking Sleeve Drift - T10362- ⇒ Fig. ""Lock Sleeve Differentiation"" , page 266
- Breather Tube Tool - T10203-
- -1- Puller - Kukko Internal - 14-19mm - 21/2-
- -1- Puller - Kukko Internal - 20-30mm - 21/4-
- -4- Puller - Kukko Counterstay - 22/2-
- Thread adaptor from Puller - Kukko Counterstay - 22/1-

Protected by copyright. Copying for private or commercial purposes, in part or in whole, is not permitted unless authorised by Volkswagen AG. Volkswagen AG does not guarantee or accept any liability with respect to the correctness of information in this document. Copyright by Volkswagen AG.

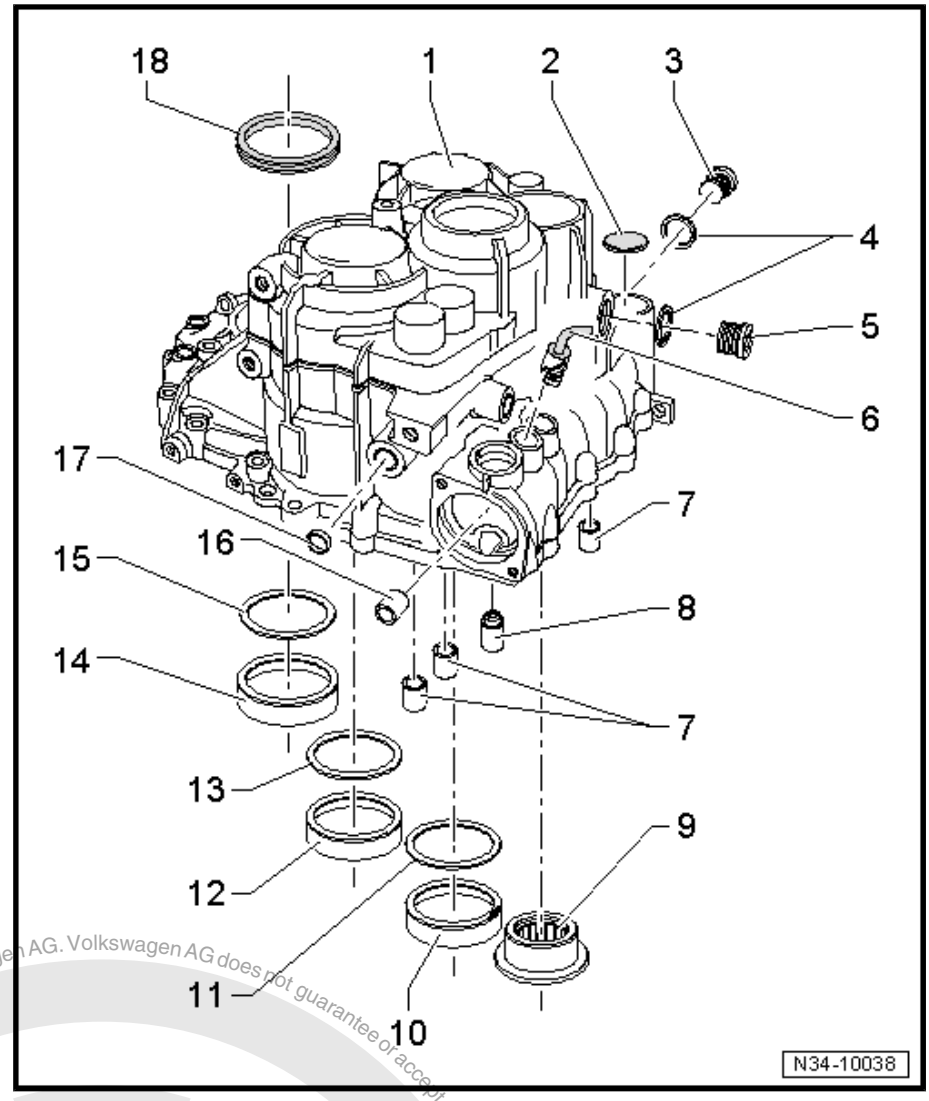

1 - Transmission Housing

- ❑ When replacing: adjust the output shafts and differential. Refer to ⇒ "4 Overview - Adjustment", page 393
- ❑ Changes to the grooved ball bearing/input shaft mount area -item 3- ⇒ Item 3 (page 310)
- ❑ Changes near the mount area for the cover/input shaft -item 4- ⇒ Item 4 (page 229)
- ❑ Refer to the Parts Catalog.

2 - Cap

- ❑ Removing. Refer to ⇒ Fig. ""Removing the Cover -A- "" , page 264 .
- ❑ Installing. Refer to ⇒ Fig. ""Installing the Cover"" , page 264 .

3 - Oil Drain Plug

- ❑ Tightening specification. Refer to ⇒ Fig. ""Different Versions of the Oil Fill and Drain Plugs"" , page 192 .

4 - Seal

- ❑ If present, replace after removing

5 - Oil Filler Plug

- ❑ Tightening specification. Refer to ⇒ Fig. ""Different Versions of the Oil Fill and Drain Plugs"" , page 192 .

6 - Locking Elbow

- ❑ Adjusting the gearshift mechanism. Refer to ⇒ "1.11 Selector Mechanism, Adjusting", page 97 .
- ❑ Can be replaced with transmission not disassembled
- ❑ Removing. Refer to ⇒ Fig. ""Removing the Locking Elbow for the Gearshift Shaft"" , page 264 .
- ❑ Installation position. Refer to ⇒ Fig. ""Installed Position: Locking Elbow"" , page 265 .
- ❑ Installing. Refer to ⇒ Fig. ""Drive Lock Elbow -arrow- for Selector Shaft In Up to Tool Stop."" , page 265 .

7 - Bearing Bushing

- ❑ For the selector rods
- ❑ Removing. Refer to ⇒ Fig. ""Removing the Shift Rod Bearing Bushing"" , page 265 .
- ❑ Installing. Refer to ⇒ Fig. ""Installing the Shift Rod Bearing Bushing All the Way Onto the Tool"" , page 265 .

8 - Retaining Sleeve

- ❑ Removing when the transmission is disassembled. Refer to ⇒ Fig. ""Removing the Retaining Sleeve -A- from the Transmission Housing"" , page 266
- ❑ Removing when the transmission is not disassembled. Refer to ⇒ Fig. ""Removing the Retaining Sleeve on A Transmission Not Disassembled using the Guide Pins -10-15- ."" , page 266
- ❑ Different retaining sleeves. Refer to ⇒ Fig. ""Lock Sleeve Differentiation"" , page 266

Protected by copyright. Copyright by Volkswagen AG. Volkswagen AG does not guarantee or accept any liability with respect to the correctness of information in this document. Copyright by Volkswagen AG.

- ❑ Installing a retaining sleeve with a shoulder. Refer to ⇒ Fig. ""Drive In Lock Sleeve with Shoulder as far as Stop on Tool"" , page 266
- ❑ Installing the retaining sleeve without a shoulder. Refer to ⇒ Fig. ""Drive in Lock Sleeve without Shoulder as far as Stop on Tool"" , page 267

9 - Needle Sleeve

- ❑ For the reverse shaft
- ❑ Always replace if removed
- ❑ Removing. Refer to ⇒ Fig. ""Removing the Reverse Shaft Needle Sleeve from the Transmission Housing"" , page 267 .
- ❑ Installing. Refer to ⇒ Fig. ""Installing the Needle Sleeve -A- into the Transmission Housing"" , page 267 .

10 - Outer Race/Tapered Roller Bearing

- ❑ Output shaft, 5th/6th and reverse gears
- ❑ Removing and installing. Refer to ⇒ "3.1 Overview - Input Shaft, 5th/6th and Reverse Gears", page 344 .
- ❑ When replacing: adjust output shaft for 5th/6th and reverse gear. Refer to ⇒ "3.3 Output Shaft, 5th, 6th and Reverse Gears, Adjusting", page 353 .

11 - Shim

- ❑ Output shaft, 5th/6th and reverse gears
- ❑ Adjustment overview. Refer to ⇒ "4 Overview - Adjustment", page 393 .

12 - Outer Race/Tapered Roller Bearing

- ❑ Output shaft, 1st to 4th gears
- ❑ Removing and installing. Refer to ⇒ "2.2 Output Shaft, 1st to 4th Gears, Disassembling and Assembling", page 321 .
- ❑ Adjust, if output shaft for 1st to 4th gear is replaced. Refer to ⇒ "2.3 Output Shaft 1st through 4th Gear, Adjusting", page 340 .

13 - Shim

- ❑ Output shaft, 1st to 4th gears
- ❑ Adjustment overview. Refer to ⇒ "4 Overview - Adjustment", page 393 .

14 - Outer Race/Tapered Roller Bearing

- ❑ For the differential
- ❑ FWD, removing and installing. Refer to ⇒ "5.1 FWD Differential, Disassembling and Assembling", page 394 .
- ❑ AWD, removing and installing. Refer to ⇒ "5.2 Differential, AWD, Disassembling and Assembling", page 399 .
- ❑ When replacing: adjust the differential. Refer to ⇒ "5.3 Differential, Adjusting", page 405

15 - Shim

- ❑ For the differential
- ❑ Adjustment overview. Refer to ⇒ "4 Overview - Adjustment", page 393 .

16 - Bearing Bushing

- ❑ For the selector shaft
- ❑ Removing. Refer to ⇒ Fig. ""Removing the Selector Shaft Bearing Bushing"" , page 267 .
- ❑ Installing. Refer to ⇒ Fig. ""Installing the Gearshift Shaft Bearing Bushing -A- All the Way onto the Tool"" , page 268 .

17 - Plugs

- ❑ Removing. Refer to ⇒ Fig. ""Removing the Plug -1- "" , page 268 .
- ❑ Installing. Refer to ⇒ Fig. ""Installing the Plug -1- "" , page 268 .

18 - Seal

- ❑ For the left flange shaft
- ❑ FWD, replacing. Refer to ⇒ "1.1 Left Flange Shaft Seal, Replacing", page 369 .

Protected by copyright. Copying for private or commercial purposes, in part or in whole, is not permitted unless authorised by Volkswagen AG. Volkswagen AG does not guarantee or accept any liability with respect to the correctness of information in this document. Copyright by Volkswagen AG.

❑ AWD, replacing. Refer to ⇒ “1.1 Left Flange Shaft Seal, Replacing”, page 369 .

Removing the Cover -A-

– Pierce the rubber in the center of the cover with a screwdriver -B- and pry it out of the cover in direction of -arrow-.

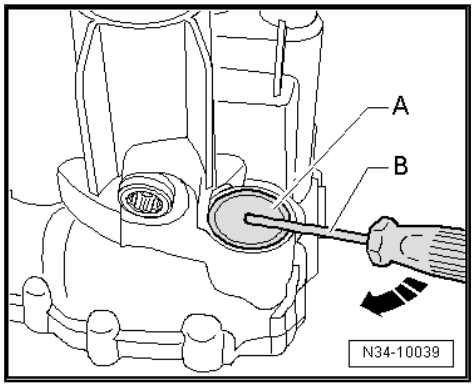

Installing the Cover

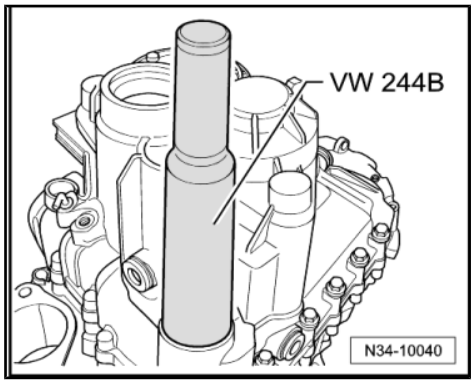

Removing the Locking Elbow for the Gearshift Shaft

– Remove the elbow in its unlocked position.

– Guide a screwdriver -A- into hole of lock elbow -B-.

– Pry out the locking elbow in direction of -arrow-.

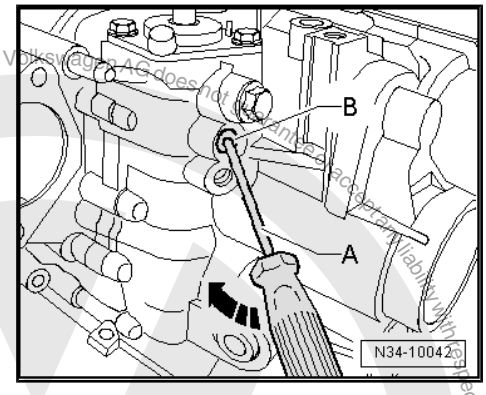

Protected by copyright. Copying for private or commercial purposes, in part or in whole, is not permitted unless authorised by Volkswagen AG. Volkswagen AG does not guarantee or accept any liability with respect to the correctness of information in this document. Copyright by Volkswagen AG.

Installed Position: Locking Elbow

- The mark on the locking elbow -arrow- must point toward the connection on the clutch slave cylinder -1-.
- Dimension -a- must be approximately 45°.

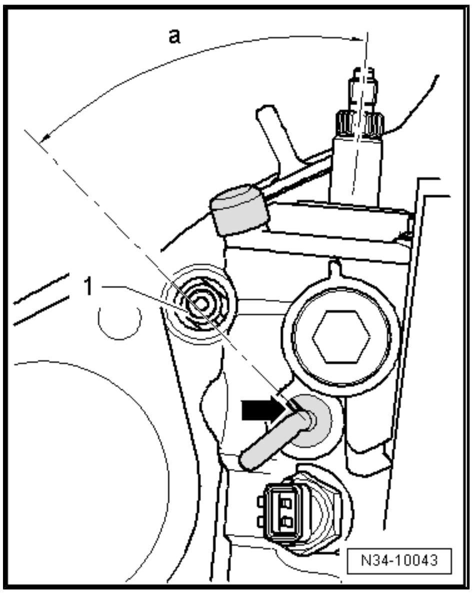

Drive Lock Elbow -arrow- for Selector Shaft In Up to Tool Stop.

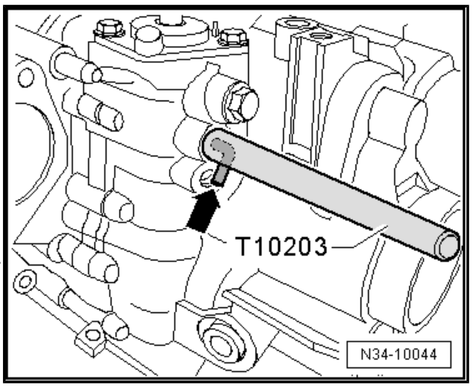

Note

The locking elbow must be unlocked when being installed.

Removing the Shift Rod Bearing Bushing

A - 14.5 to 18.5 mm Internal Puller , for example Puller - Kukko Internal - 14-19mm - 21/2-

B - Counter Support , for example, Puller - Kukko Counterstay - 22/2-

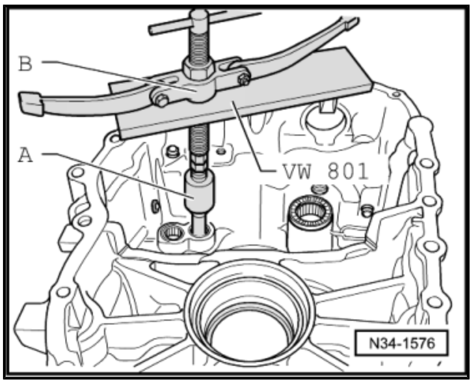

Installing the Shift Rod Bearing Bushing All the Way Onto the Tool

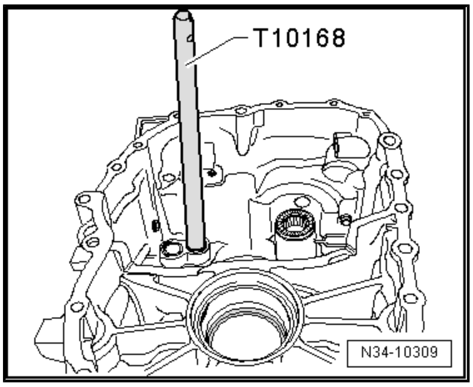

Protected by copyright. Copying for private or commercial purposes, in part or in whole, is not permitted unless authorised by Volkswagen AG. Volkswagen AG does not guarantee or accept any liability with respect to the correctness of information in this document. Copyright by Volkswagen AG.

Removing the Retaining Sleeve -A- from the Transmission Housing

– Place transmission housing on Press Plate - VW401- and Press Plate - VW402- in such a way so that the alignment sleeves inside the transmission housing do not get damaged.

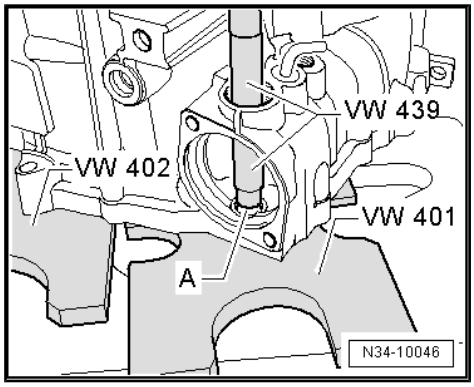

Removing the Retaining Sleeve on A Transmission Not Disassembled using the Guide Pins - 10-15- .

- Locking bolt and selector shaft removed.

– Turn the transmission so that the retaining sleeve cannot fall into the transmission.

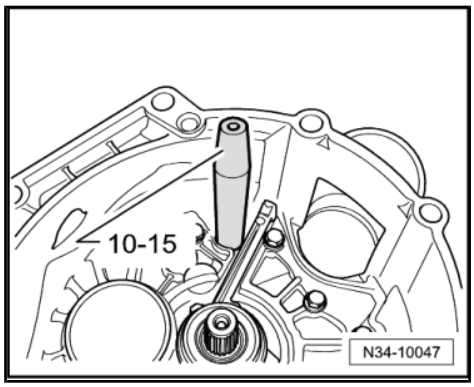

Lock Sleeve Differentiation

The following lock sleeves may be installed:

Lock sleeve with a shoulder -arrow 1-. Refer to
⇒ Fig. ""Drive In Lock Sleeve with Shoulder as far as Stop on Tool"" , page 266 .

Lock sleeve without a shoulder -arrow 2-
⇒ Fig. ""Drive in Lock Sleeve without Shoulder as far as Stop on Tool"" , page 267 .

Allocate the components. Refer to the Parts Catalog.

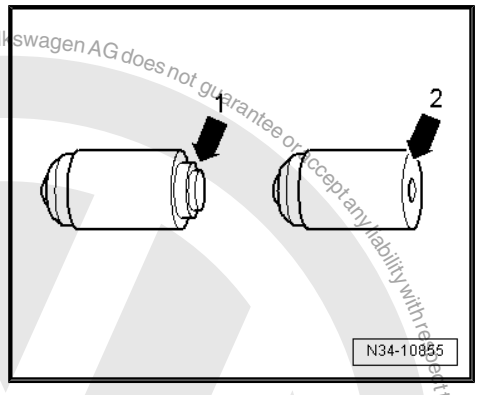

Drive In Lock Sleeve with Shoulder as far as Stop on Tool

- The transmission housing is bolted to the clutch housing.

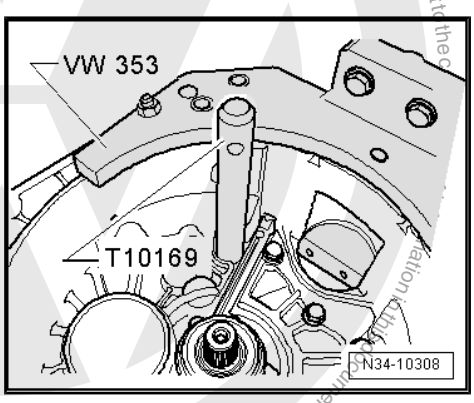

Protected by copyright. Copying for private or commercial purposes, in part or in whole, is not permitted unless authorised by Volkswagen AG. Volkswagen AG does not guarantee or accept any liability with respect to the correlation to the original. Copyright by Volkswagen AG.

Drive in Lock Sleeve without Shoulder as far as Stop on Tool

- The transmission housing is bolted to the clutch housing.

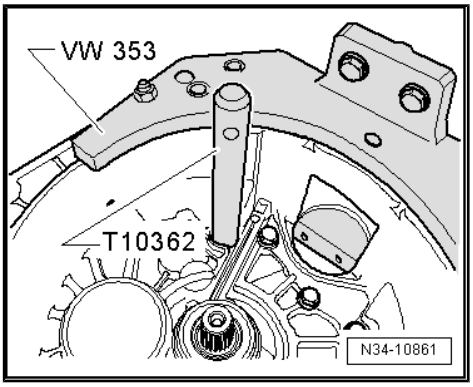

Removing the Reverse Shaft Needle Sleeve from the Transmission Housing

A - Internal Puller - 23.5 - 30 mm , for example Puller - Kukko Internal - 20-30mm - 21/4-

B - Counter Support , for example, Puller - Kukko Counterstay - 22/2-

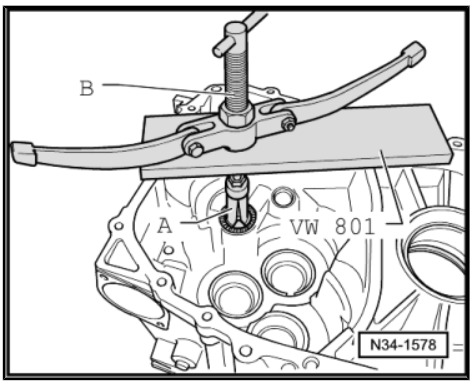

Note

The needle sleeve will get damaged when it is removed and must be replaced.

Installing the Needle Sleeve -A- into the Transmission Housing

– While installing, place thrust washer -B- for the reverse shaft onto the needle sleeve.

– Support the transmission housing with the Press Piece - 37mm - VW416B- directly under the bearing mount.

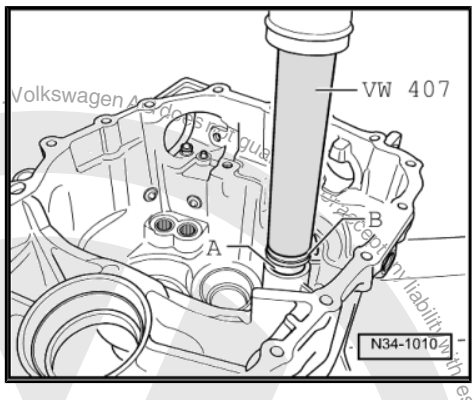

Removing the Selector Shaft Bearing Bushing

– Use the thread adapter from Puller - Kukko Counterstay - 22/1- -arrow-.

– Hold the spindle on the Subframe Support Tool - 3290- and turn the nut -B-.

A - 14.5 to 18.5 mm Internal Puller , for example Puller - Kukko Internal - 14-19mm - 21/2-

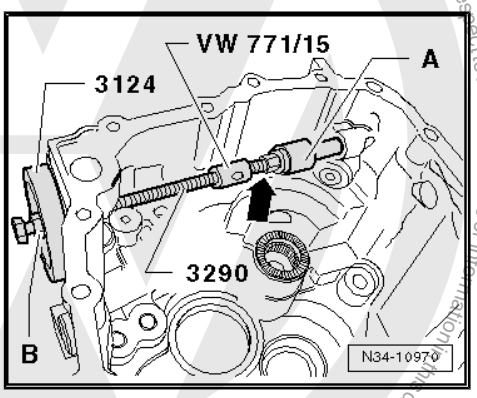

Protected by copyright. Copying for private or commercial purposes, in part or in whole, is not permitted unless authorised by Volkswagen AG. Volkswagen AG does not guarantee or accept any liability with respect to the correctness of information in this document. Copyright by Volkswagen AG.

Installing the Gearshift Shaft Bearing Bushing -A- All the Way onto the Tool

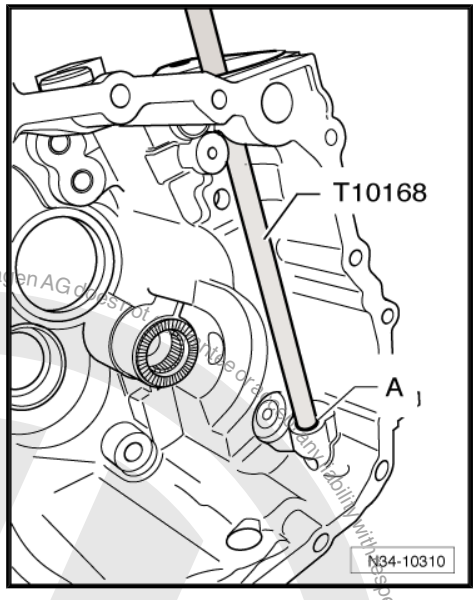

Removing the Plug -1-

– Remove the plug -1- from the inside of the transmission housing to the outside.

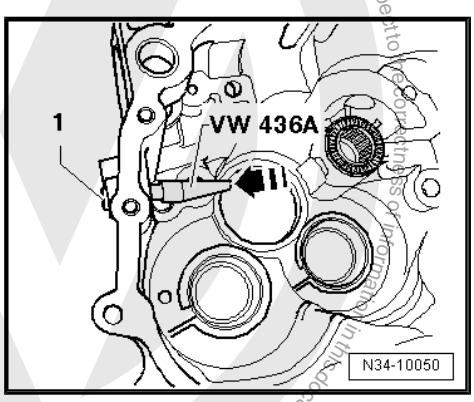

Installing the Plug -1-

– Using the Bearing Installer - Crankshaft Pilot Bearing - 3264- , drive in the sealing plugs to dimension -a- approximately 3 mm below the upper edge of the housing.

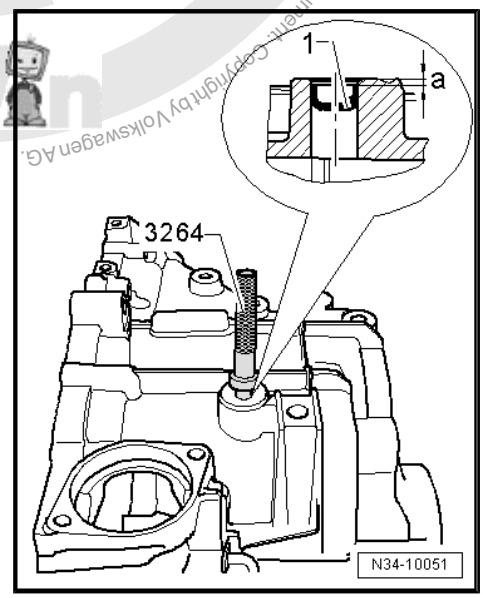

Protected by copyright. Copying for private or commercial purposes, in part or in whole, is not permitted unless authorised by Volkswagen AG. Volkswagen AG does not guarantee or accept any liability with respect to the correctness of information in this document. Copyright by Volkswagen AG.

13 Clutch Housing, Servicing

Special tools and workshop equipment required

- Press Piece - Rod - VW407-
- Bushing Driver - Selector Shaft - T10168-
- Seal Installer - Driveshaft - T40008-
- Puller - Kukko Internal - 14-19mm - 21/2-
- Puller - Kukko Internal - 20-30mm - 21/4-
- Puller - Kukko Counterstay - 22/1-
- Puller - Kukko Counterstay - 22/2-

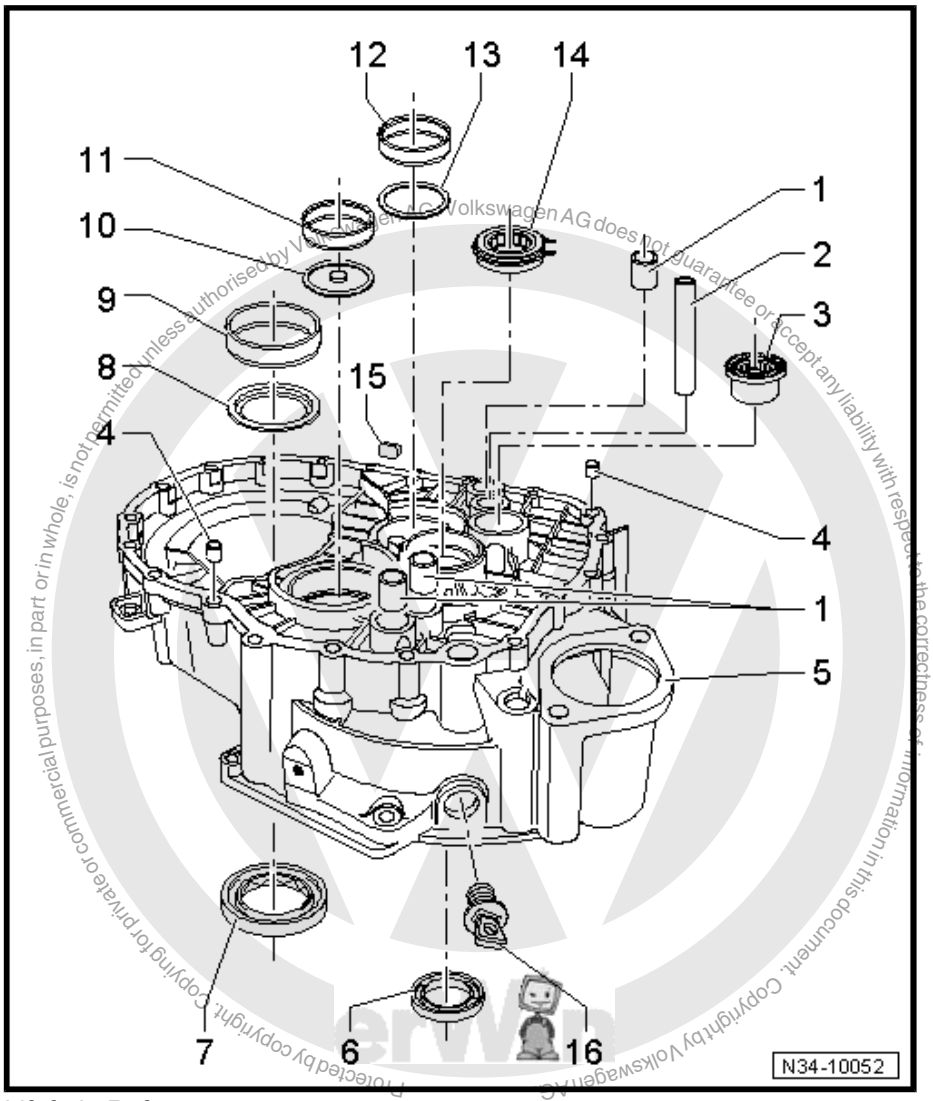

1 - Bearing Bushing

- ❑ For the selector rods
- ❑ Always replace if removed
- ❑ Removing. Refer to ⇒ Fig. ""Removing the Shift Rod Bushing"" , page 271 .
- ❑ Installing. Refer to ⇒ Fig. ""Installing the Shift Rod Bearing Bushing All the Way onto the Tool"" , page 271 .

2 - Axle for the Reverse Gear Shift Fork

- ❑ The axle cannot be removed with workshop tools.
- ❑ A new axle must be installed when using a new clutch housing. Refer to ⇒ Fig. ""Installing the Axle for the Reverse Gear Shift Fork into the Clutch Housing"" , page 272
- ❑ Mount the reverse gear shift fork on the axle. Refer to ⇒ Fig. ""The Reverse Gear Shift Fork -1- is Mounted on the Axle -2- behind the 5th and 6th Gear Shift Rod -3-."" , page 254
- ❑ Bearing on the shift rod for the 5th and 6th gear shift fork. Refer to ⇒ Fig. ""The Reverse Gear Shift Fork -1- is Mounted on the Gearshift Rod with the 5th and 6th Gear Shift Fork -2-."" , page 254
- ❑ Refer to the Parts Catalog.

3 - Needle Sleeve

- ❑ For the reverse shaft
- ❑ Always replace if removed
- ❑ Removing. Refer to ⇒ Fig. ""Removing the Needle Sleeve from the Clutch Housing"" , page 271 .

Protected by copyright. Copyright by Volkswagen AG. Volkswagen AG does not guarantee or accept any liability with respect to the correctness of information in this document. Copyright by Volkswagen AG. Protected by copyright. Copying for private or commercial purposes, in part or in whole, is not permitted unless authorised by Volkswagen AG.

- ❑ Installing. Refer to ⇒ Fig. ""Installing the Needle Sleeve -A- into the Clutch Housing"" , page 271 .

4 - Alignment Sleeve

- ❑ Quantity: 2

5 - Clutch Housing

- ❑ When replacing: adjust the output shafts and differential. Refer to ⇒ "4 Overview - Adjustment", page 393

6 - Input Shaft Seal

- ❑ Removing. Refer to ⇒ Fig. ""Remove the Seal for the Input Shaft"" , page 272 .
- ❑ Installing. Refer to ⇒ Fig. ""Installing the Seal for the Input Shaft"" , page 272 .

7 - Seal

- ❑ FWD - for the right flange shaft

♦ Replace the right flange shaft for FWD. Refer to ⇒ "1.2 Right Flange Shaft Seal, Replacing", page 370

- ❑ For the bevel box for AWD vehicles; between the manual transmission and the bevel box

♦ Replace if the manual transmission is installed and for AWD vehicles. Refer to ⇒ "2.3 Bevel Box Seal, Replacing, with Manual Transmission Installed", page 375

♦ Remove using the Puller - Crankshaft/Power Steering Seal - 2 - T20143/2-

♦ Can be driven in to the stop with a Seal Installer - Crankshaft - T40007- in a disassembled transmission.

8 - Washer

- ❑ For the differential
- ❑ Installed position: shoulder on inner diameter faces toward seal -item 7- ⇒ Item 7 (page 270)

9 - Outer Race/Tapered Roller Bearing

- ❑ For the differential
- ❑ FWD, removing and installing. Refer to ⇒ "5.1 FWD Differential, Disassembling and Assembling", page 394 .
- ❑ AWD, removing and installing. Refer to ⇒ "5.2 Differential, AWD, Disassembling and Assembling", page 399 .
- ❑ When replacing: adjust the differential. Refer to ⇒ "5.3 Differential, Adjusting", page 405

10 - Oil Deflector Ring

- ❑ Installed position: shoulder at hole points toward output shaft

11 - Outer Race/Tapered Roller Bearing

- ❑ Output shaft, 1st to 4th gears
- ❑ Removing and installing. Refer to ⇒ "2.2 Output Shaft, 1st to 4th Gears, Disassembling and Assembling", page 321 .
- ❑ Adjust, if output shaft for 1st to 4th gear is replaced. Refer to ⇒ "2.3 Output Shaft 1st through 4th Gear, Adjusting", page 340 .

12 - Outer Race/Tapered Roller Bearing

- ❑ Output shaft, 5th/6th and reverse gears
- ❑ Removing and installing. Refer to ⇒ "3.1 Overview - Input Shaft, 5th/6th and Reverse Gears", page 344 .
- ❑ When replacing: adjust output shaft for 5th/6th and reverse gear. Refer to ⇒ "3.3 Output Shaft, 5th, 6th and Reverse Gears, Adjusting", page 353 .

13 - Washer

- ❑ Output shaft, 5th/6th and reverse gears
- ❑ Always 0.65 mm thick

14 - Cylindrical Roller Bearing

- ❑ For the input shaft
- ❑ Removing and installing. Refer to ⇒ "1.1 Overview - Input Shaft", page 310 .

15 - Magnet

- ❑ Held in place by housing joint surface

Protected by copyright. Copyright by Volkswagen AG. Volkswagen AG does not guarantee or accept any liability with respect to the correctness of information in this document. Copyright by Volkswagen AG.

16 - Cap

❑ Not on all clutch housings

Removing the Shift Rod Bearing Bushing

A - Counter Support , for example Puller - Kukko Counterstay - 22/1-

B - 14.5 to 18.5 mm Internal Puller , for example Puller - Kukko Internal - 14-19mm - 21/2-

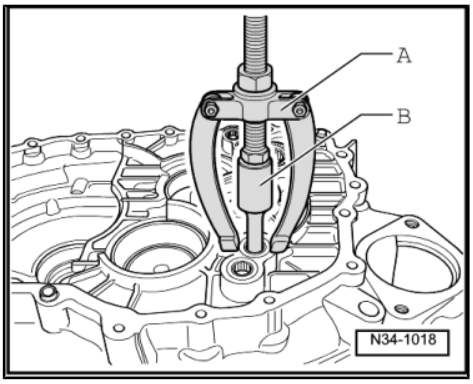

Installing the Shift Rod Bearing Bushing All the Way onto the Tool

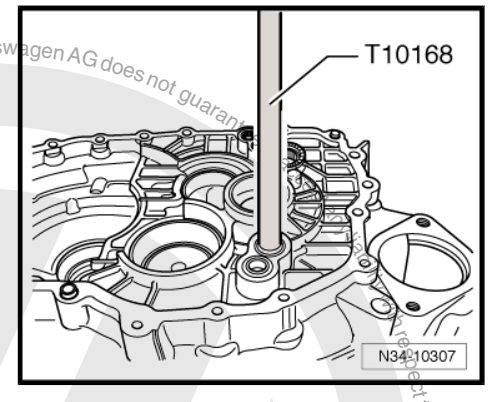

Removing the Needle Sleeve from the Clutch Housing

A - Counter Support , for example, Puller - Kukko Counterstay - 22/2-

B - Internal Puller - 23.5 - 30 mm , for example Puller - Kukko Internal - 20-30mm - 21/4-

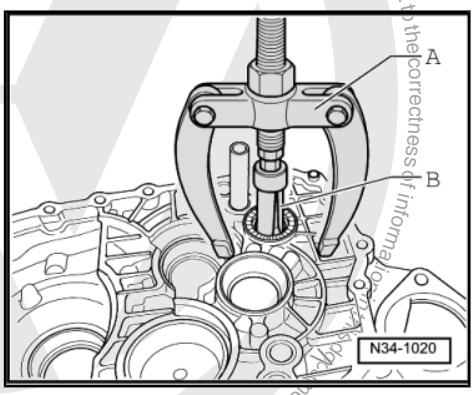

Note

The needle sleeve will get damaged when it is removed and must be replaced.

Installing the Needle Sleeve -A- into the Clutch Housing

– While installing, place thrust washer -B- for the reverse shaft onto the needle sleeve.

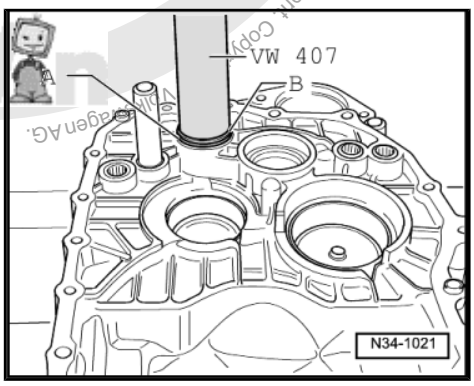

Protected by copyright. Copying for private or commercial purposes, in part or in whole, is not permitted unless authorised by Volkswagen AG. Volkswagen AG does not guarantee or accept any liability with respect to the correctness of information in this document. Copyright by Volkswagen AG.

Remove the Seal for the Input Shaft

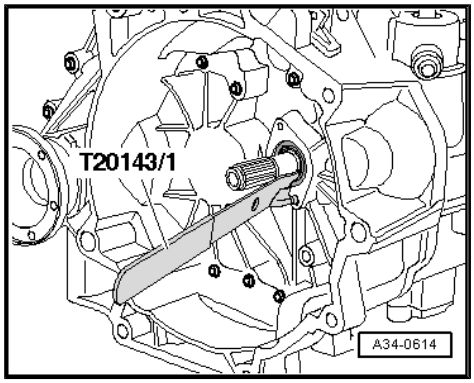

Note

Use the drift to remove the seal with the clutch housing removed.

Installing the Seal for the Input Shaft

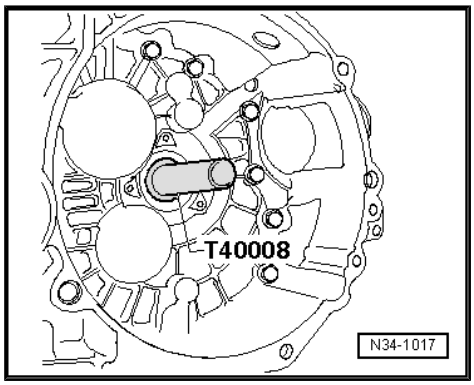

Installing the Axle for the Reverse Gear Shift Fork into the Clutch Housing

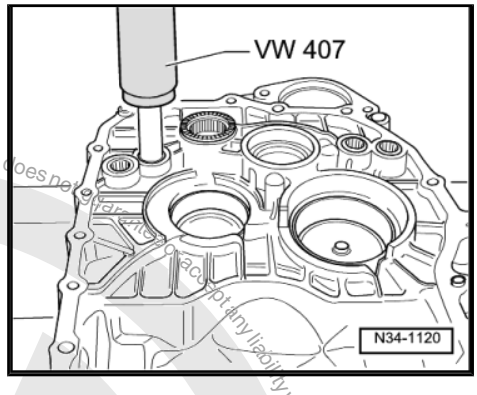

Protected by copyright. Copying for private or commercial purposes, in part or in whole, is not permitted unless authorised by Volkswagen AG. Volkswagen AG does not give any warranty nor accept any liability with respect to the correctness of information in this document. Copyright by Volkswagen AG.

14 Shift Unit, Servicing

⇒ "14.1 Selector Shaft Seal, Replacing", page 274

Note

- *Lubricate the bearing areas and sliding surfaces.*
- *Refer to the Parts Catalog for the grease allocation.*

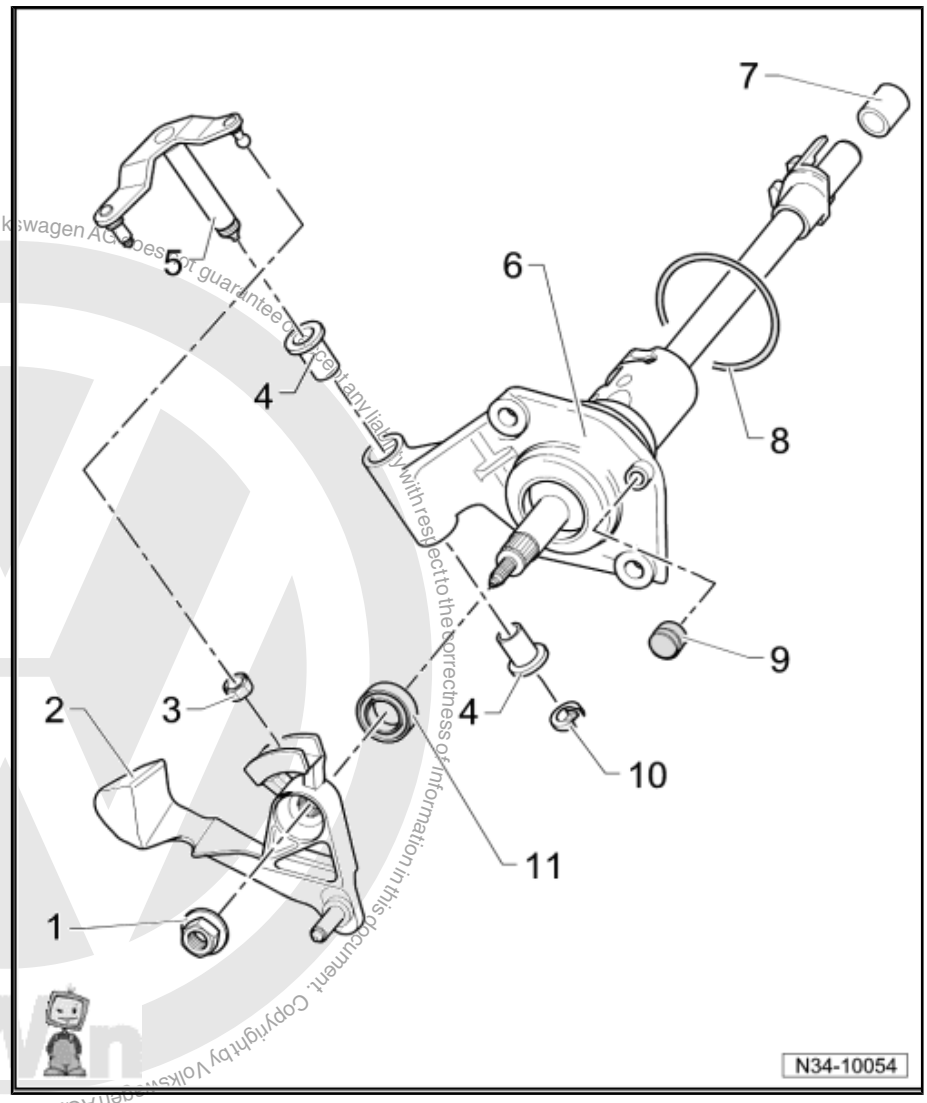

1 - Hex Nut

- ❑ 23 Nm
- ❑ Self-locking
- ❑ Replace after removing

2 - Selector Lever

- ❑ Insert so that master spline aligns with shift rod
- ❑ Can be replaced with the shift mechanism still installed
- ❑ Installation position. Refer to ⇒ Fig. ""Selector Lever/ Relay Lever Installed Position"" , page 88 .
- ❑ Installing. Refer to ⇒ Fig. ""Installing the Transmission Shift Lever"" , page 88 .
- ❑ Adjust the gearshift mechanism after installing. Refer to ⇒ "1.11 Selector Mechanism, Adjusting", page 97 .

3 - Sliding Shoe

- ❑ Attached into the relay lever -item 5- ⇒ Item 5 (page 273)

4 - Bearing Bushing

- ❑ Not needed for the plastic relay lever

5 - Relay Lever

- ❑ Installation position. Refer to ⇒ Fig. ""Selector Lever/Relay Lever Installed Position"" , page 88 .
- ❑ Adjust the gearshift mechanism after installing. Refer to ⇒ "1.11 Selector Mechanism, Adjusting", page 97 .
- ❑ Plastic relay lever from 05/2007. Refer to ⇒ "1.8 Plastic Relay Lever", page 89 .

6 - Gearshift Unit

- ❑ Consisting of the gearshift shaft and the gearshift cover
- ❑ The components cannot be separated from each other
- ❑ Can be removed and installed with the transmission installed
- ❑ Gearshift shaft adapted together with the revised reverse gear shift fork bearing -item 5- ⇒ Item 5 (page 277)
- ❑ Allocation, gearshift shafts. Refer to ⇒ Fig. ""Allocation, Gearshift Shafts"" , page 274

Protected by copyright. Copyright for private or commercial purposes, in part or in whole, is not permitted unless authorised by Volkswagen AG. Volkswagen AG does not guarantee or accept any liability with respect to the correctness of information in this document. Copyright by Volkswagen AG.

7 - Bearing Bushing

- ❑ For the selector shaft
- ❑ Removing and installing -item 16- ⇒ Item 16 (page 263) .

8 - O-Ring

- ❑ Insert in the groove in the shift cover
- ❑ Install with transmission fluid
- ❑ Replace after removing

9 - Cap

- ❑ For the transmission ventilation

10 - Lock Washer

- ❑ For the relay lever
- ❑ Not on the plastic relay lever
- ❑ Replace after removing

11 - Gearshift Shaft Seal

- ❑ Replacing. Refer to ⇒ “14.1 Selector Shaft Seal, Replacing”, page 274 .

Allocation, Gearshift Shafts

Number of Selector Fingers on the Selector Shaft	Bearing, Reverse Gear Shift Fork
Fig.-A-= 2 shift fingers -arrow 1- and -arrow 2-	On the axle for the reverse gear shift fork. Refer to ⇒ Fig. ““The Reverse Gear Shift Fork -1- is Mounted on the Axle -2- behind the 5th and 6th Gear Shift Rod -3-.”“ , page 254
Fig. -B- = 1 shift finger -arrow 3-	Gearshift rod with shift fork for 5th and 6th gear. Refer to ⇒ Fig. ““The Reverse Gear Shift Fork -1- is Mounted on the Gear-shift Rod with the 5th and 6th Gear Shift Fork -2-.”“ , page 254

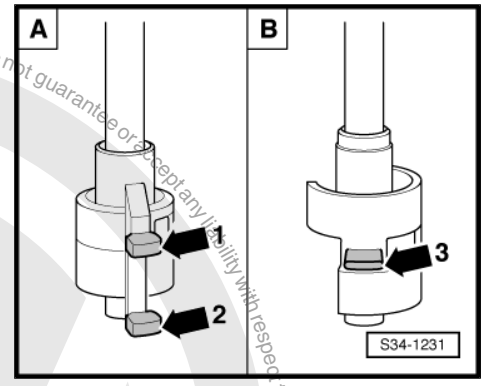

14.1 Selector Shaft Seal, Replacing

Special tools and workshop equipment required

- ♦ Press Piece - Shift Rod/Alternator - VW423-
- ♦ Puller - Crankshaft/Power Steering Seal - 1 - T20143/1-
- ♦ Sealing Grease - G 052 128 A1-

– Remove entire air filter housing if it is located above the selector shaft. Refer to ⇒ Rep. Gr. 23 ; Diesel Direct Injection System; Air Filter Housing, Removing and Installing or ⇒ Rep. Gr. 24 ; Air Filter; Air Filter Housing, Removing and Installing .

Protected by copyright. Copying for private or commercial purposes, in part or in whole is not permitted unless authorised by Volkswagen AG. Volkswagen AG does not guarantee or accept any liability with respect to the correctness of information in this document. Copyright by Volkswagen AG.

Metal Relay Lever

– Remove the clip -2- and the relay lever -3-.

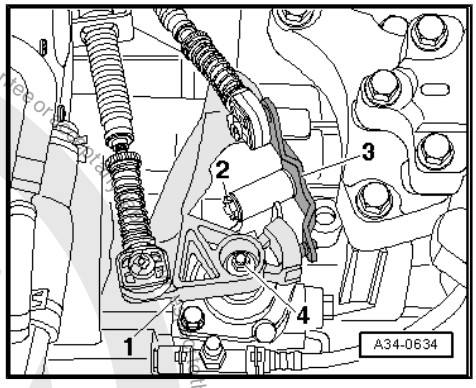

Note

If the relay lever cannot be removed due to the transmission bracket, remove selector cable from relay lever. Remove the slide shoe from the transmission shift lever.

Plastic Relay Lever

– Remove the relay lever with the cable retainer. Refer to ⇒ “1.8 Plastic Relay Lever”, page 89 .

Continuation for All Shift Mechanisms

– Remove the nut -4- and the transmission gearshift lever -1-.

– Pry out the seal using the Puller - Crankshaft/Power Steering Seal - 1 - T20143/1- .

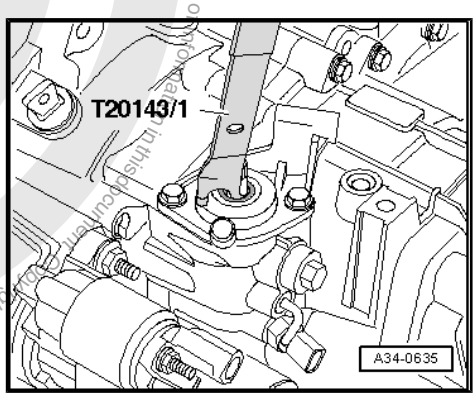

– Lightly oil the new gasket on the outer edge.

– Fill the space between the sealing/dust lip -arrow- halfway with Sealing Grease - G 052 128 A1- .

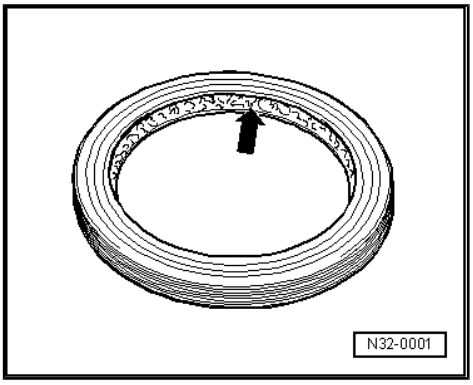

Protected by copyright. Copying for private or commercial purposes, in part or in whole, is not permitted unless authorised by Volkswagen AG. Volkswagen AG does not guarantee or accept any liability with respect to the correctness of information in this document. Copyright by Volkswagen AG.

– Install the seal using Press Piece - Shift Rod/Alternator - VW423- .

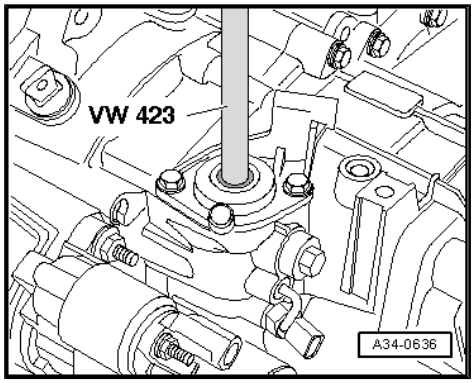

Install in reverse order of removal.

– Attach the transmission gearshift lever to the gearshift shaft -item 1- ⇒ Item 1 (page 273) and tighten the nut to the tightening specification.

Note

The gearshift lever can be installed in only one position.

– Adjust the gearshift mechanism. Refer to ⇒ “1.11 Selector Mechanism, Adjusting”, page 97 .

– If it was removed earlier install the complete air filter housing. Refer to ⇒ Rep. Gr. 23 ; Diesel Direct Injection System; Air Filter Housing, Removing and Installing or ⇒ Rep. Gr. 24 ; Air Filter; Air Filter Housing, Removing and Installing .

Protected by copyright. Copying for private or commercial purposes, in part or in whole, is not permitted unless authorised by Volkswagen AG. Volkswagen AG does not guarantee or accept any liability with respect to the correctness of information in this document. Copyright by Volkswagen AG.

15 Shift Forks, Servicing

Special tools and workshop equipment required

- Press Plate - VW402-
- Press Piece - Rod - VW411-
- Press Piece - Multiple Use - VW426-
- Press Piece - Multiple Use - VW431-
- Puller - Kukko Internal - 18.5-23.5mm - 21/3-
- Puller - Kukko Counterstay - 22/1-

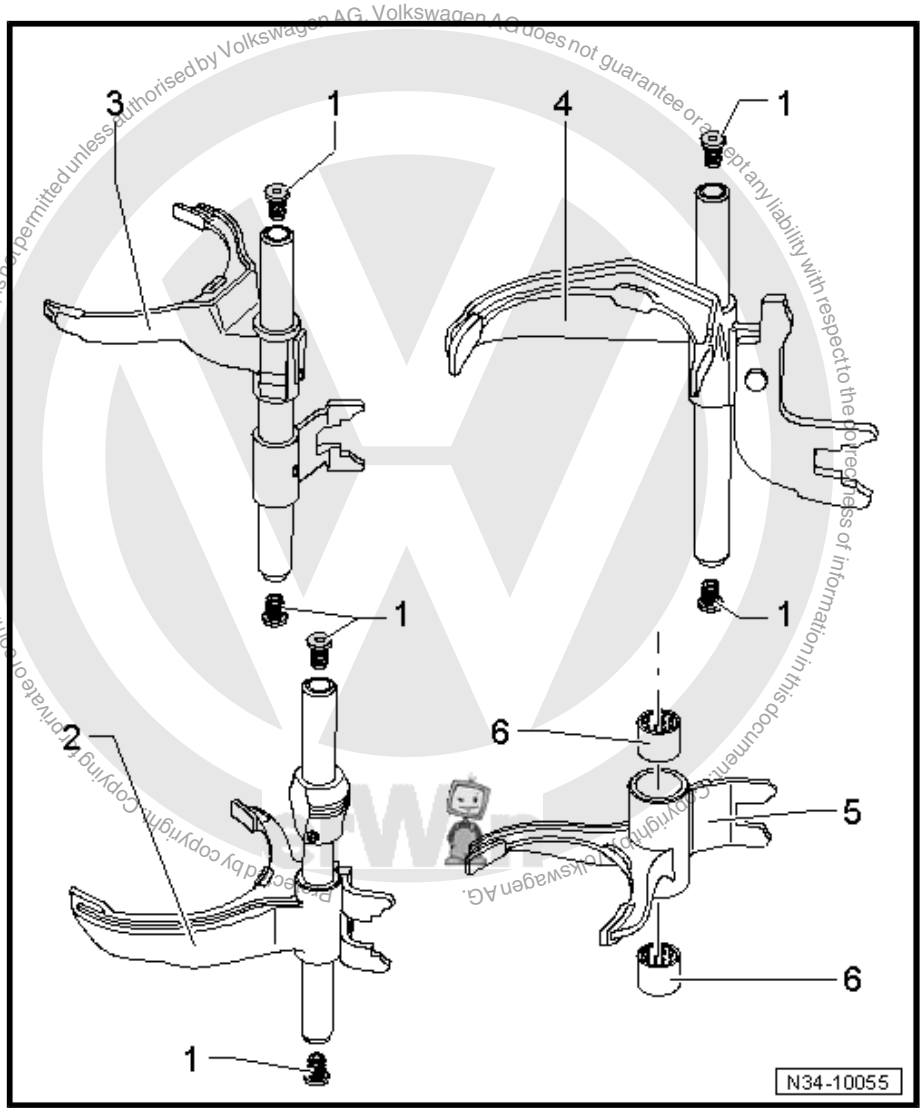

1 - Rubber Damper

- ❑ Can be removed and installed by hand

2 - Gearshift Rod with 1st Gear and 2nd Gear Shift Fork

3 - Gearshift Rod with 3rd Gear and 4th Gear Shift Fork

4 - Gearshift Rod with 5th Gear and 6th Gear Shift Fork

- ❑ On some transmission, is also for the reverse gear shift fork bearing

5 - Reverse Gear Shift Fork

- ❑ On the axle for the reverse gear shift fork. Refer to ⇒ Fig. ""The Reverse Gear Shift Fork -1- is Mounted on the Axle -2- behind the 5th and 6th Gear Shift Rod -3-."" , page 254
- ❑ From transmission manufacture date 3/6/06, ball sleeve -item 6- ⇒ Item 6 (page 277) has been omitted
- ❑ Sliding omission
- ❑ Reverse gear shift fork is adapted
- ❑ If the axle for the reverse gear shift fork is deleted, bearing on the shift rod for the 5th and 6th gear shift fork. Refer to ⇒ Fig. ""The Reverse Gear Shift Fork -1- is Mounted on the Gearshift Rod with the 5th and 6th Gear Shift Fork -2-."" , page 254
- ❑ Reverse gear shift fork differentiation. Refer to ⇒ Fig. ""Reverse Gear Shift Fork Differentiation"" , page 278
- ❑ Refer to the Parts Catalog.

6 - Ball Sleeve

- ❑ Removing. Refer to ⇒ Fig. ""Through Transmission Manufacture Date 3/5/06 - Remove Reverse Gear Shift Fork Ball Sleeve"" , page 278 .

Volkswagen AG. Volkswagen AG does not guarantee or accept any liability with respect to the correctness of information in this document. Copyright by Volkswagen AG. Reproduced by copyright. Copying for private or commercial purposes, in part or in whole, is not permitted unless authorised by Volkswagen AG.

- Installing. Refer to
  ⇒ Fig. ""Through Transmission Manufacture Date 3/5/06 - Press In Reverse Gear Shift Fork Ball Sleeve"" , page 278 .
- From transmission manufacture date 3/6/06, ball sleeve has been omitted
- Sliding omission

Reverse Gear Shift Fork Differentiation

Dimension "a" mm	Reverse Gear Shift Fork	Mounting
24	with ball sleeve	On the axle for the reverse gear shift fork. Refer to ⇒ Fig. ""The Reverse Gear Shift Fork -1- is Mounted on the Axle -2- behind the 5th and 6th Gear Shift Rod -3-."" , page 254
18	without ball sleeve	
15	without ball sleeve	Gearshift rod with shift fork for 5th and 6th gear. Refer to ⇒ Fig. ""The Reverse Gear Shift Fork -1- is Mounted on the Gearshift Rod with the 5th and 6th Gear Shift Fork -2-."" , page 254

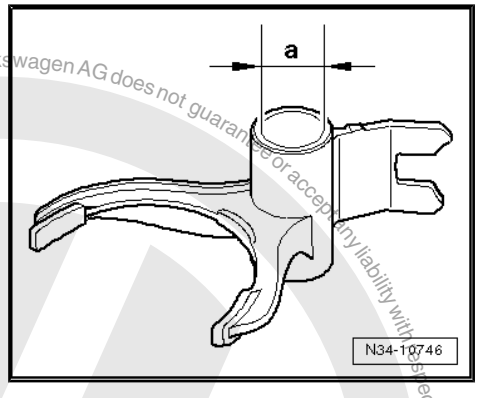

Through Transmission Manufacture Date 3/5/06 - Remove Reverse Gear Shift Fork Ball Sleeve

A - Internal Puller 18 to 23 mm , for example Puller - Kukko Internal - 18.5-23.5mm - 21/3-

B - Counter Support , for example Puller - Kukko Counterstay - 22/1-

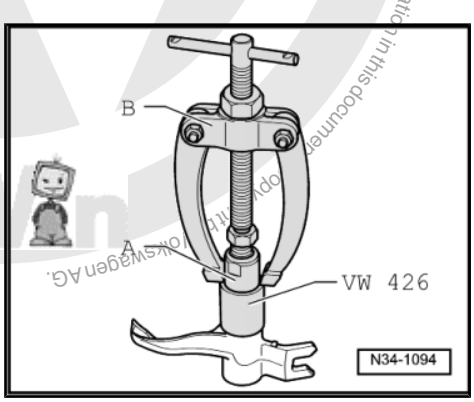

Through Transmission Manufacture Date 3/5/06 - Press In Reverse Gear Shift Fork Ball Sleeve

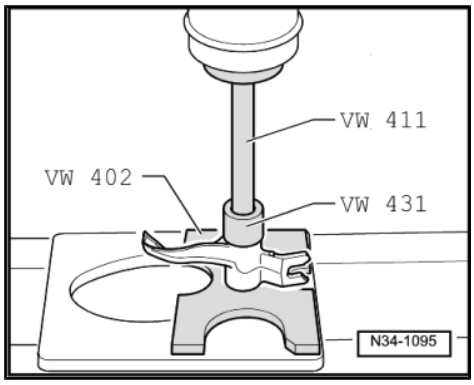

Protected by copyright. Copying for private or commercial purposes, in part or in whole, is not permitted unless authorised by Volkswagen AG. Volkswagen AG does not guarantee or accept any liability with respect to the correctness of information in this document. Copyright by Volkswagen AG.

16 Special Tools

Special tools and workshop equipment required

- Bearing Driver - Multiple Use - VW244B-
- Transmission Support - VW353-
- Press Plate - VW401-
- Press Plate - VW402-
- Press Piece - Rod - VW407-
- Press Piece - 37mm - VW416B-

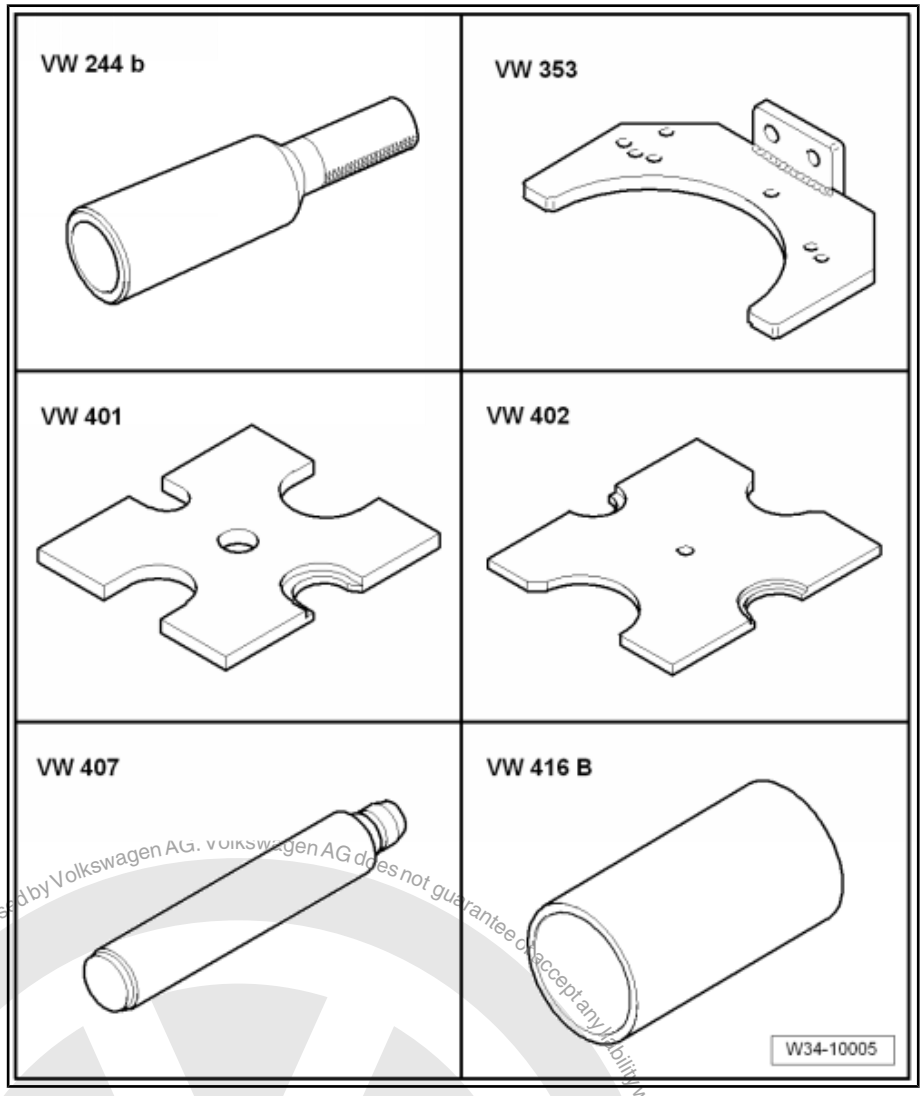

Protected by copyright. Copying for private or commercial purposes, in part or in whole, is not permitted unless authorised by Volkswagen AG. Volkswagen AG does not guarantee or accept any liability with respect to the correctness of information in this document. Copyright by Volkswagen AG.

- Guide Pin - VW436A-
- Press Piece - Guide Pin - VW439-
- Slide Hammer Set - Hammer - VW771-
- Crankshaft Holding Fixture - VW801-
- Guide Pins - 10-15-
- Press Piece - Pivot Mount Bushing - 3124-

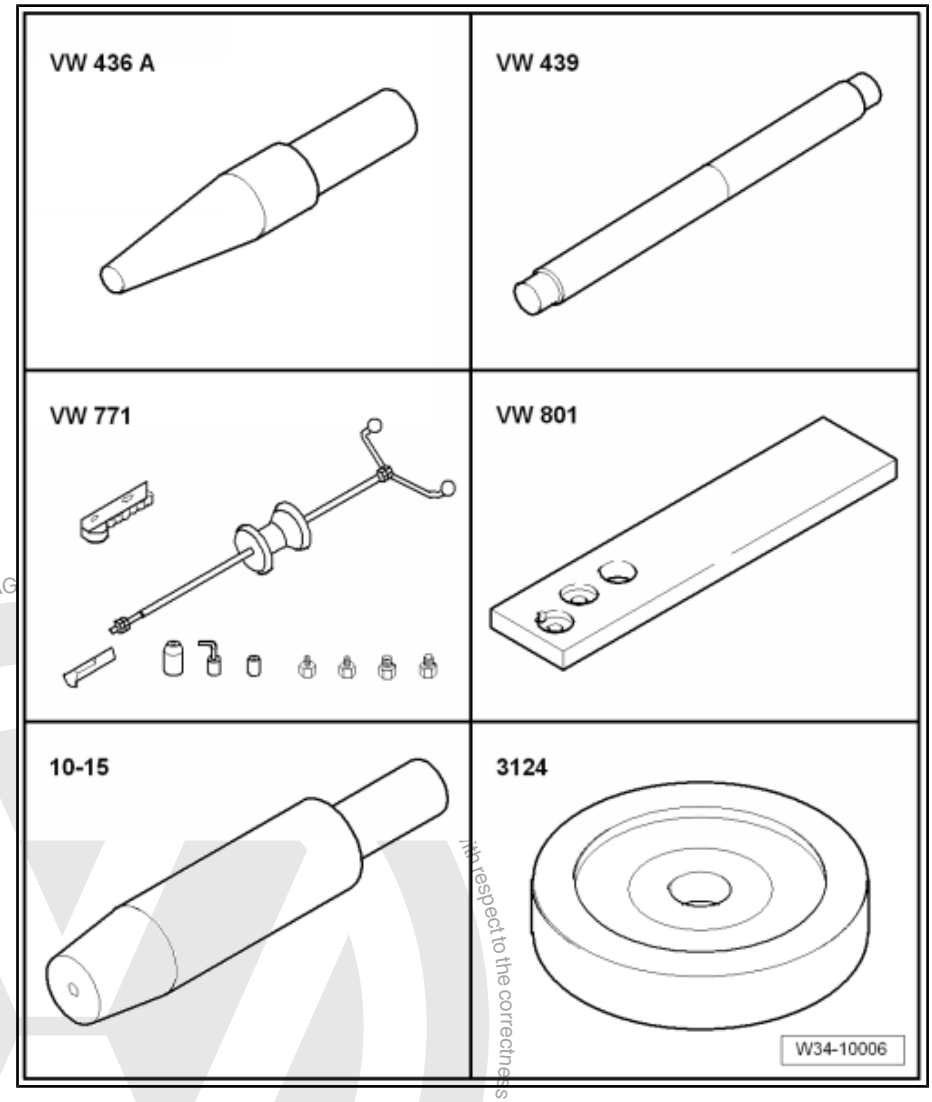

Protected by copyright. Copying for private or commercial purposes, in part or in whole, is not permitted unless authorised by Volkswagen AG. Copyright by Volkswagen AG. No liability with respect to the correctness of information in this document.

- Bracket - Multiple Use - 30-211A-
- Seal Installer - Crankshaft - T10042-
- Locking Sleeve Drift - T10169-
- or Locking Sleeve Drift - T10362-
  ⇒ Fig. ""Lock Sleeve Differentiation"" , page 266
- Seal Installer - Driveshaft - T40008-
- Torque Wrench 1331 5-50Nm - VAG1331-
- Hot Air Blower - VAG1416-

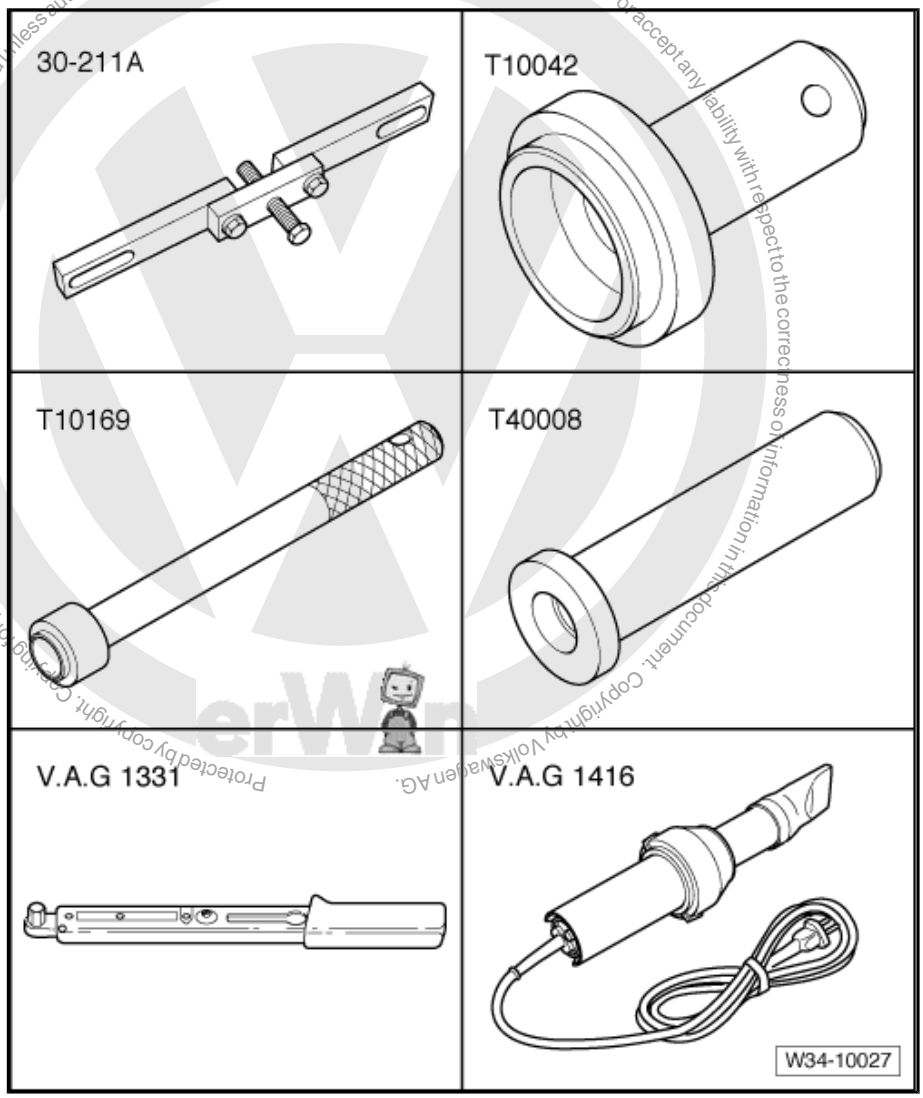

Protected by copyright. Copying for private or commercial purposes, in part or in whole, is not permitted unless authorised by Volkswagen AG. Volkswagen AG does not guarantee or accept any liability with respect to the correctness of information in this document. Copyright by Volkswagen AG.

- Bearing Installer - Crankshaft Pilot Bearing - 3264-
- Subframe Support Tool - 3290-
- Torque Wrench 1331 5-50Nm - VAG1331-
- Bushing Driver - Selector Shaft - T10168-
- Locking Sleeve Drift - T10169- or Locking Sleeve Drift - T10362-
  ⇒ Fig. ""Lock Sleeve Differentiation"" , page 266
- Breather Tube Tool - T10203-

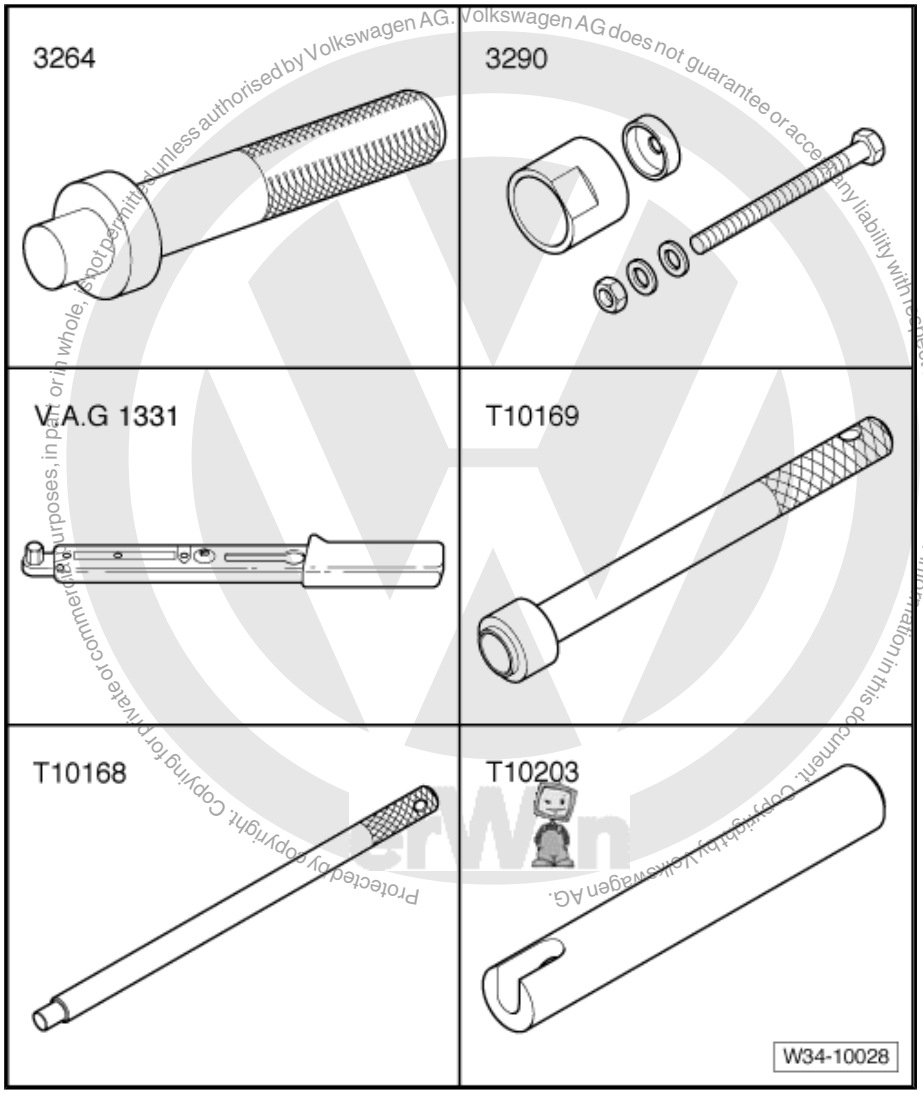

Protected by copyright. Copying for private or commercial purposes, in part or in whole, is not permitted unless authorised by Volkswagen AG. Volkswagen AG does not guarantee or accept any liability with respect to the correctness of information in this document. Copyright by Volkswagen AG.

- Holding Plate - VW309A-
- Holding Fixture - VW313-
- Transmission Support - VW353-
- Press Piece - Multiple Use - VW455- or Press Piece - Front Wishbone - 3160-
- Slide Hammer Set - VW771-
- -1- Puller - Kukko Internal - 12-16mm - 21/1-
- -3- Puller - Kukko Quick Action Separating Tool - 5-60mm - 17/0-
- -4- Puller - Kukko Counterstay - 22/1-

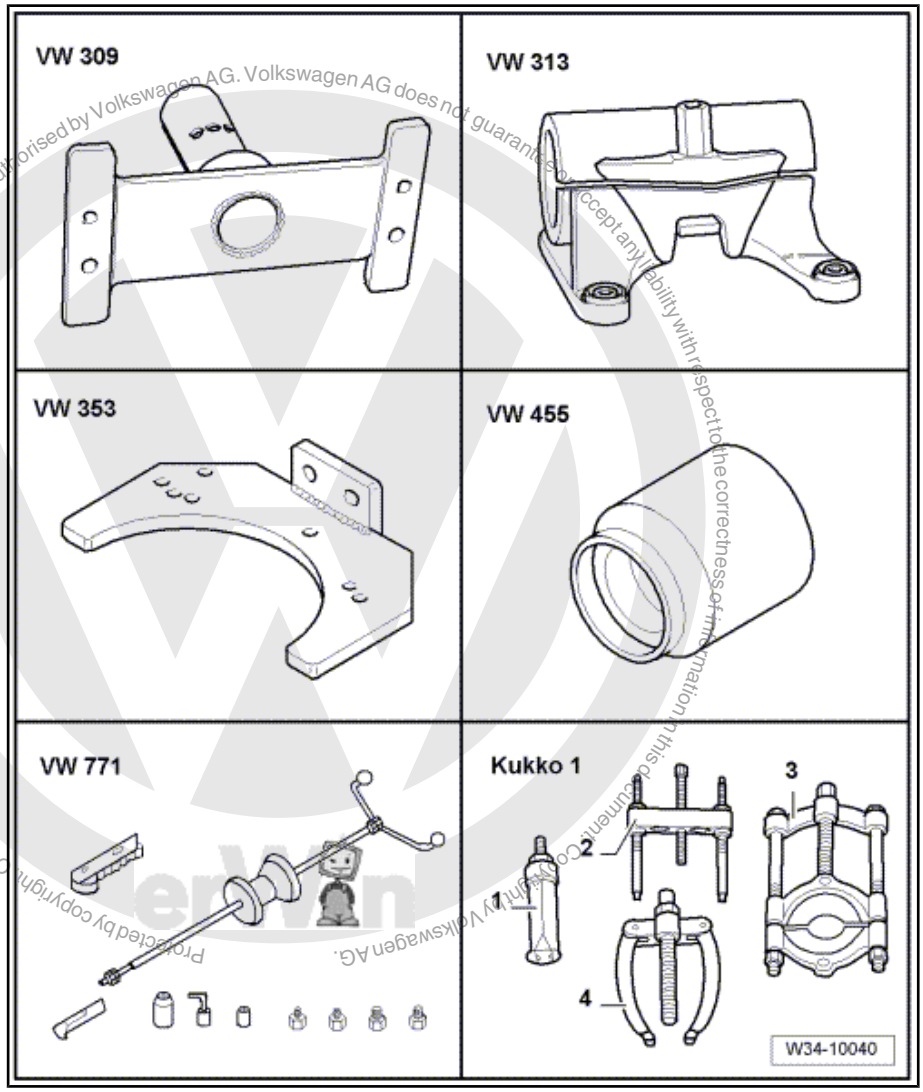

Protected by copyright. Copying for private or commercial purposes, in whole or in part, is not permitted unless authorised by Volkswagen AG. Volkswagen AG does not guarantee or accept any liability with respect to the correctness of information in this document. Copyright by Volkswagen AG.

- Press Piece - Rod - VW407-
- Bushing Driver - Selector Shaft - T10168-
- Seal Installer - Driveshaft - T40008-
- -1- Puller - Kukko Internal - 14-19mm - 21/2-
- -1- Puller - Kukko Internal - 20-30mm - 21/4-
- -4- Puller - Kukko Counter-stay - 22/1-
- -4- Puller - Kukko Counter-stay - 22/2-

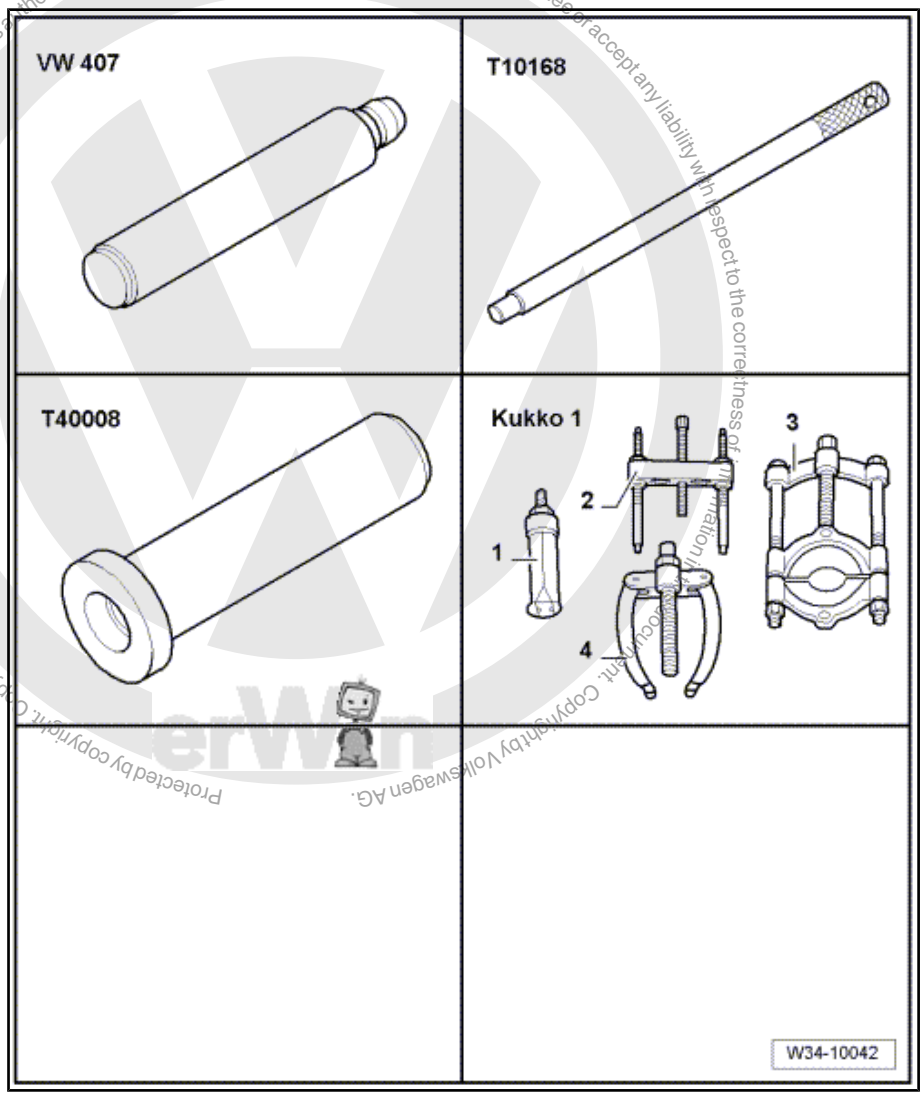

Protected by copyright. Copying for private or commercial purposes, in part or in whole, is not permitted unless authorised by Volkswagen AG. Volkswagen AG does not guarantee or accept any liability with respect to the correctness of information in this document. Copyright by Volkswagen AG.

- Support Elements for transmission (determine when mounting the Mounting Plate on the Transmission Support)
- Transmission Support - Mounting Plate 33 - 3282/33-
- Transmission Support Jig - 3336- to transport the transmission.
- Torque Wrench 1331 5-50Nm - VAG1331-
- Torque Wrench 1332 40-200Nm - VAG1332-
- Engine and Gearbox Jack - VAS6931-

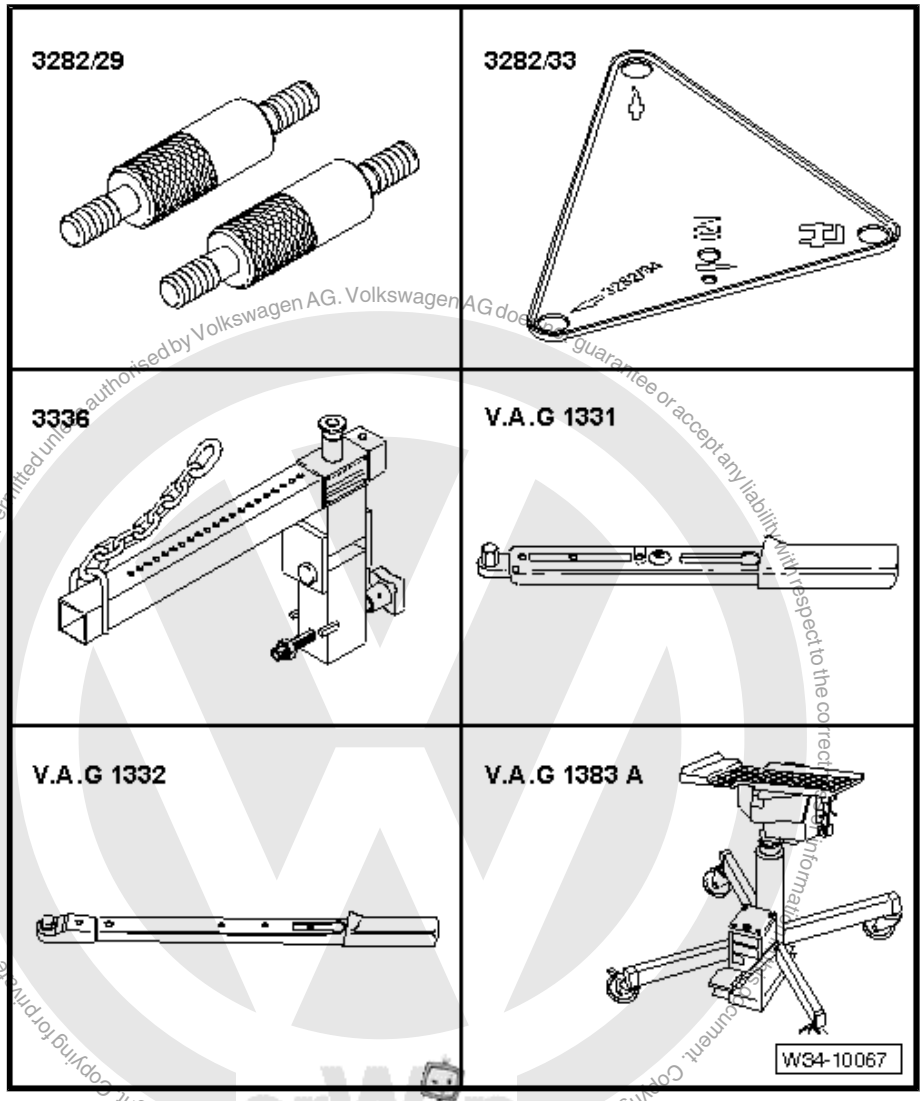

Protected by copyright. Copying for private or commercial purposes, in part or in whole, is not permitted unless authorised by Volkswagen AG. Volkswagen AG does not guarantee or accept any liability with respect to the correctness of information in this document. Copyright by Volkswagen AG.

- Press Plate - VW402-
- Press Piece - Rod - VW411-
- Press Piece - Multiple Use - VW426-
- Press Piece - Multiple Use - VW431-
- -1- Puller - Kukko Internal - 18.5-23.5mm - 21/3-
- -4- Puller - Kukko Counter-stay - 22/1-

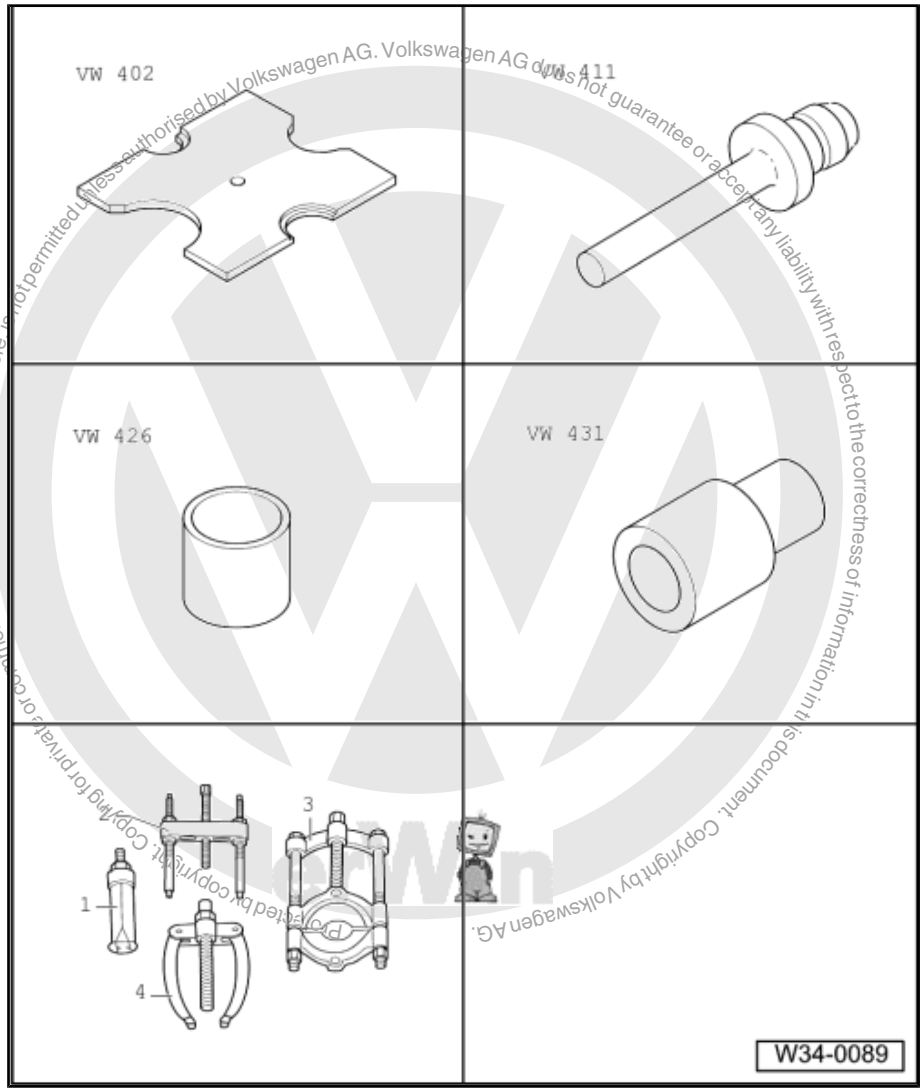

Protected by copyright. Copying for private or commercial purposes, in part or in whole, is not permitted unless authorised by Volkswagen AG. Volkswagen AG does not guarantee or accept any liability with respect to the correctness of information in this document. Copyright by Volkswagen AG.

- Bracket - Multiple Use - 30-211A-
- Seal Installer - Drive Flange - T10143- or Seal Installer - Output Shaft Oil Seal - T10180-
- Locking Sleeve Drift - T10169-
- or Locking Sleeve Drift - T10362-
  ⇒ Fig. ""Lock Sleeve Differentiation"" , page 266
- Seal Installer - Driveshaft - T40008-
- Torque Wrench 1331 5-50Nm - VAG1331-
- Hot Air Blower - VAG1416-

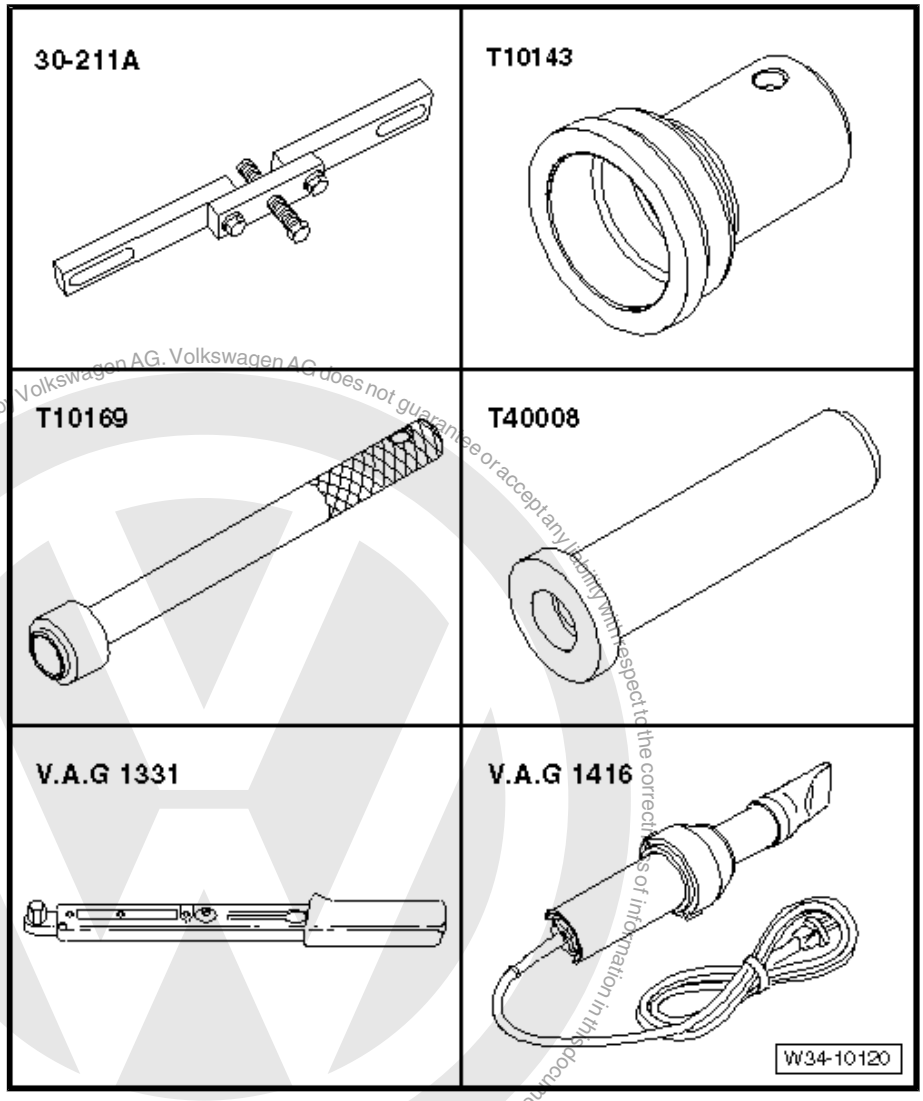

Protected by copyright. Copying for private or commercial purposes, in part or in whole, is not permitted unless authorised by Volkswagen AG. Volkswagen AG does not guarantee or accept any liability with respect to the correctness of information in this document. Copyright by Volkswagen AG.

- Engine Support Bridge - Gearbox Bracket - T10346- quantity: 2
- Engine Support Device - 3300A-
- Slide Hammer Set - Adapter 40 - VW771/40-
- Hose Clamps - Up To 25mm - 3094-
- Grease for Clutch Disc Shaft Splines - G 000 100-

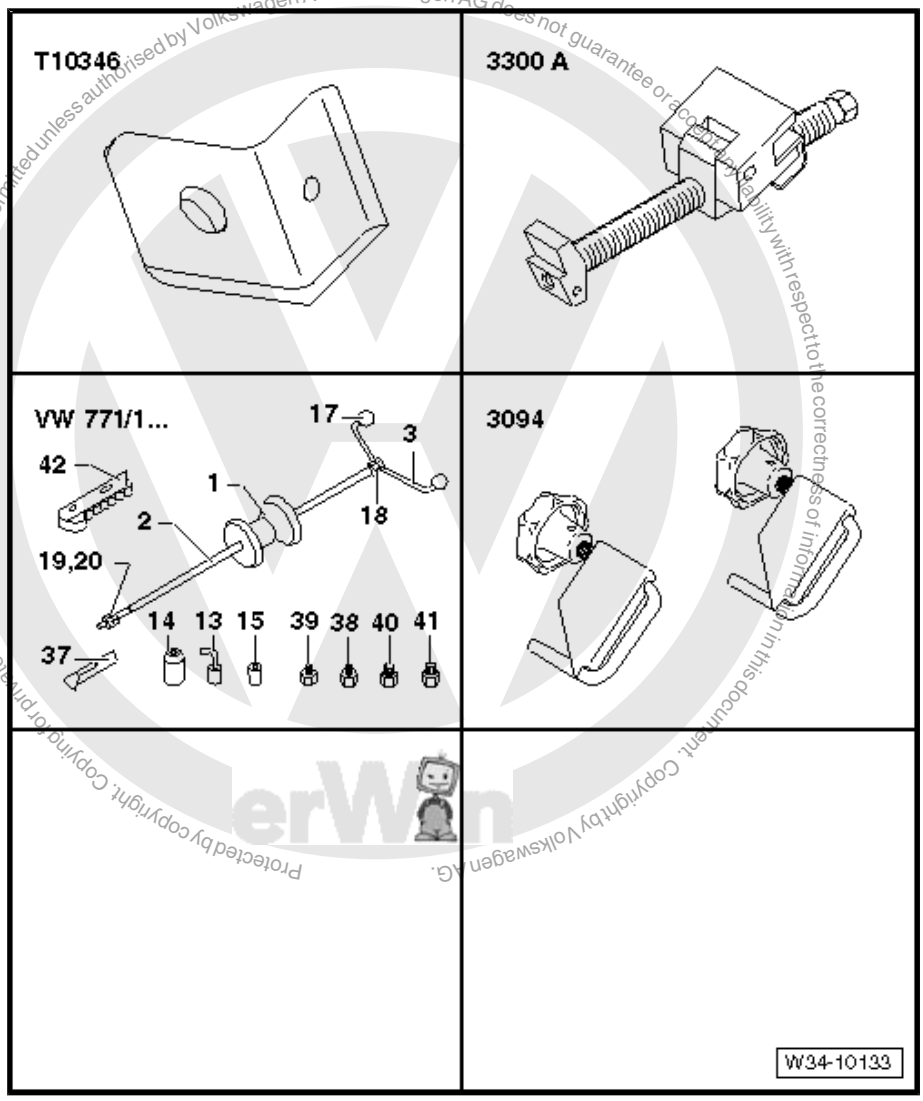

Protected by copyright. Copying for private or commercial purposes, in part or in whole, is not permitted unless authorised by Volkswagen AG. Volkswagen AG does not guarantee or accept any liability with respect to the correctness of information in this document. Copyright by Volkswagen AG.

- Engine Support Bridge - 10-222A-
- Engine Support Bridge - Engine Support Feet - 10-222A/8-
- Engine Support Bridge - Engine Support 3 - 10-222A /3-
- Engine Support Bridge - Engine Support 18 - 10-222A /18-
- Transmission Support - 3282-

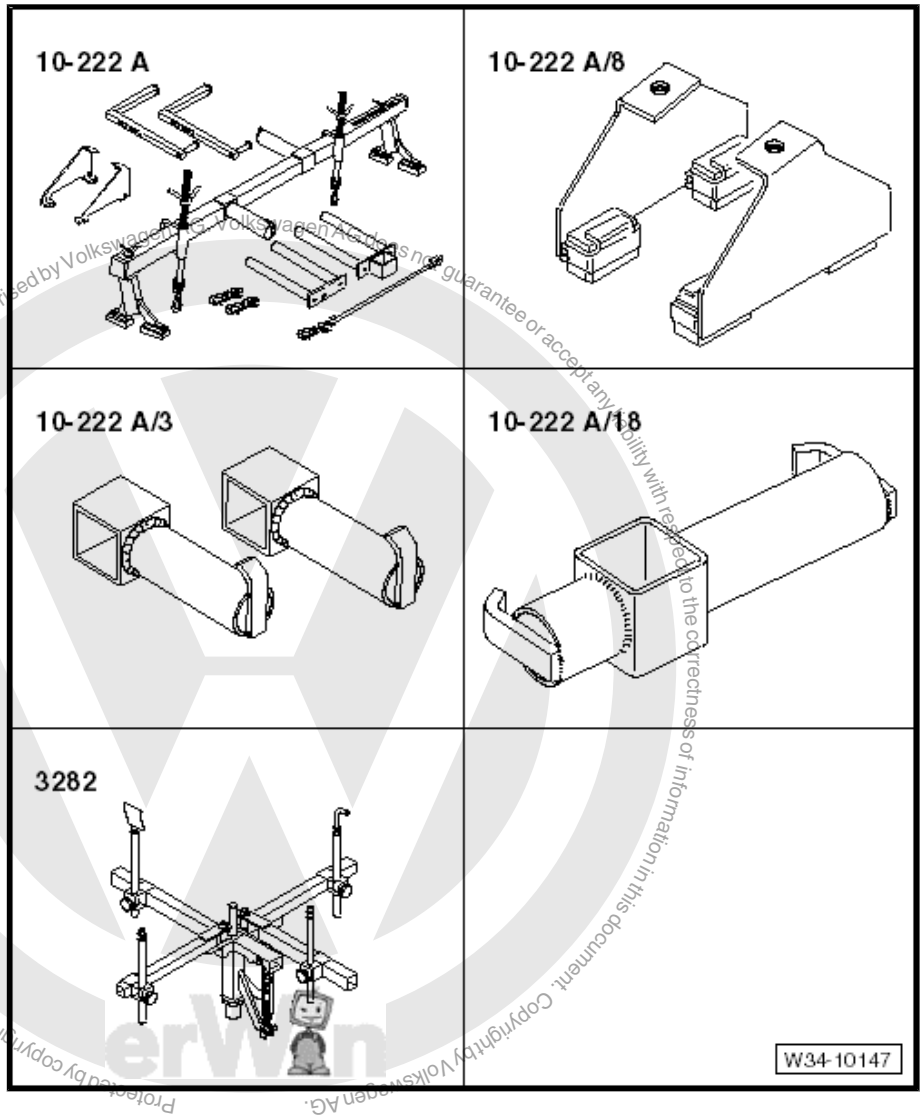

Protected by copyright. Copying for private or commercial purposes, in part or in whole, is not permitted unless authorised by Volkswagen AG. Volkswagen AG does not guarantee or accept any liability with respect to the correctness of information in this document. Copyright by Volkswagen AG.

Protected by copyright. Copying for private or commercial purposes, in part or in whole, is not permitted unless authorised by Volkswagen AG. Volkswagen AG does not guarantee or accept any liability with respect to the correctness of information in this document. Copyright by Volkswagen AG.

- Release Tool - T10236-
- Thrust Disc - VW412-
- Assembly Tool - T10178- or flat iron, 200 x 25 x 5
- Adapter - 10-222A/25- or flat iron, 350 x 30 x 5
- -4- Counter-Support , for example -Kukko 22/4-
- Wedge - T10357-
- Thrust Block - T10083-

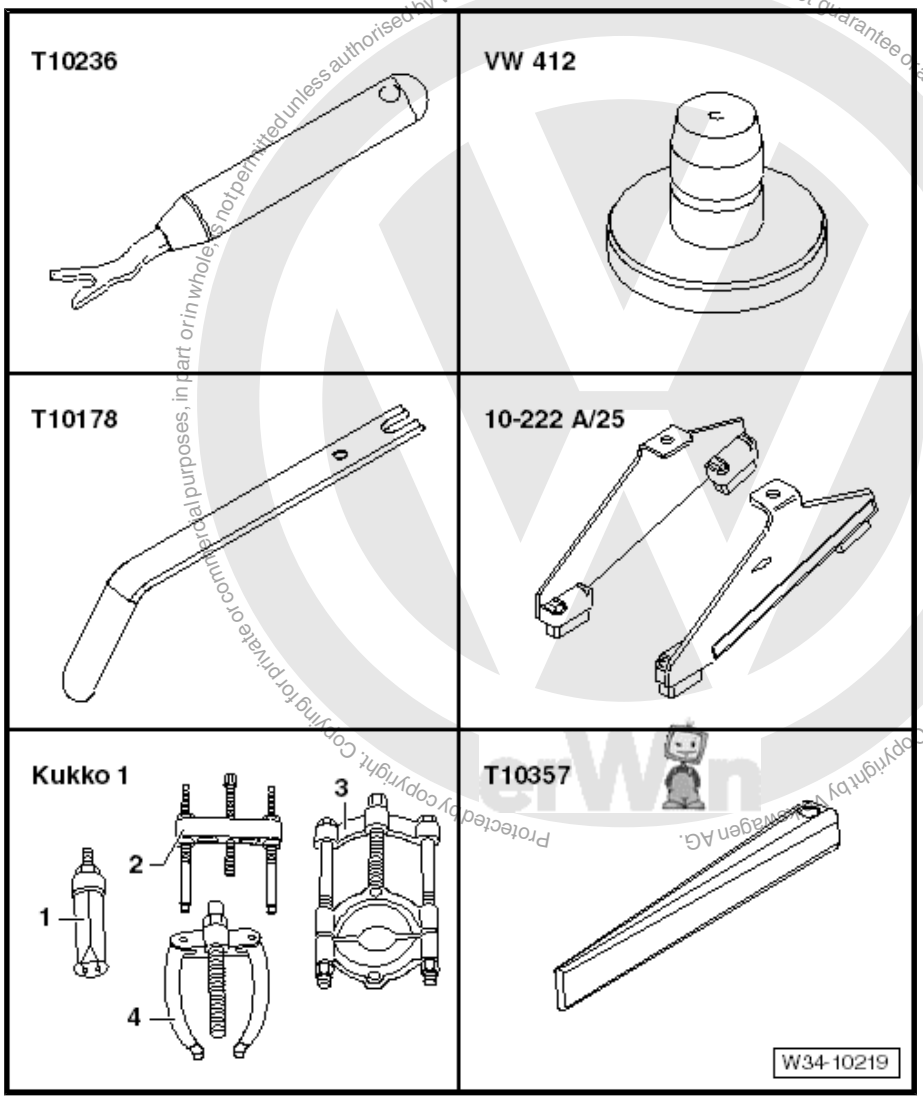

- Used Oil Collection and Extraction Unit - SMN372500-

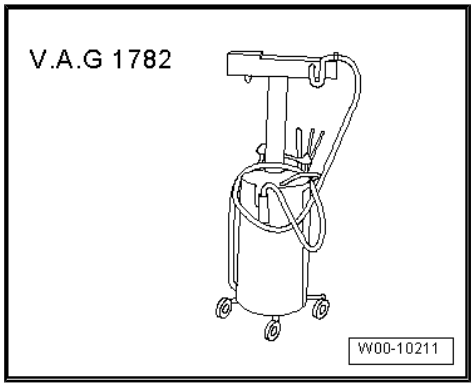

- Connecting Pin - T10027A-

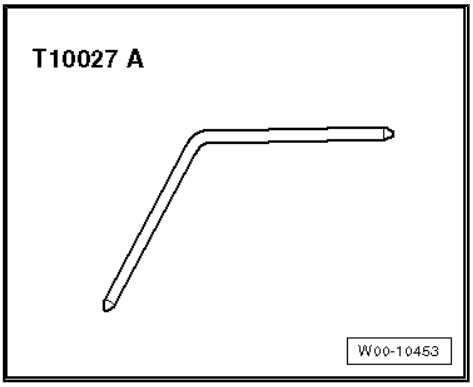

- Puller - Flanged Shaft - T10037-

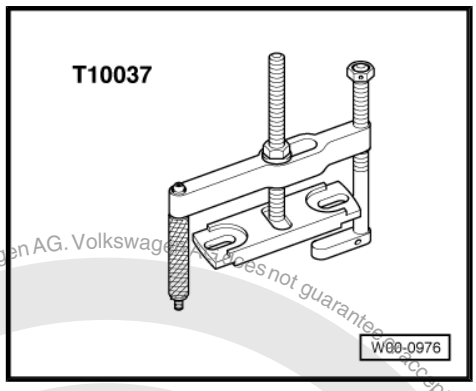

- Thrust Block - T10083-

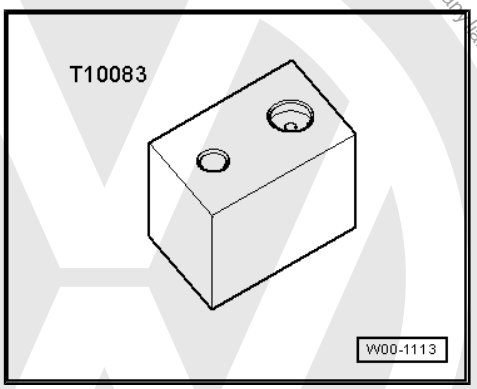

- Socket And Extended Bit - T10107A-

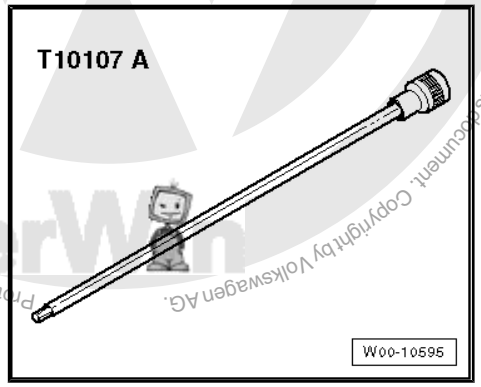

Protected by copyright. Copying for private or commercial purposes, in part or in whole, is not permitted unless authorised by Volkswagen AG. Volkswagen AG does not guarantee or accept any liability with respect to the correctness of information in this document. Copyright by Volkswagen AG.

Protected by copyright. Copyright by Volkswagen AG. Volkswagen AG does not guarantee or accept any liability with respect to the correctness of information in this document. Copyright by Volkswagen AG. Protected by copyright. Copying for private or commercial purposes, in part or in whole, is not permitted unless authorised by Volkswagen AG.

- Engine Support Bridge - Gearbox Bracket - T10346-

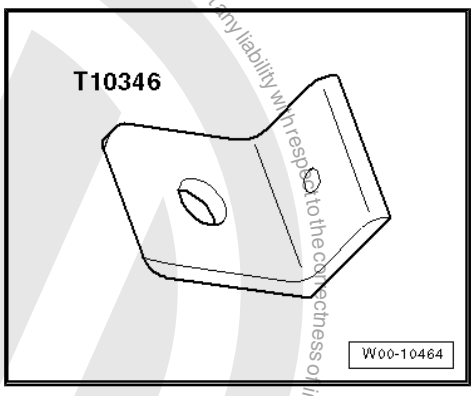

- Cover Cap - T10460-

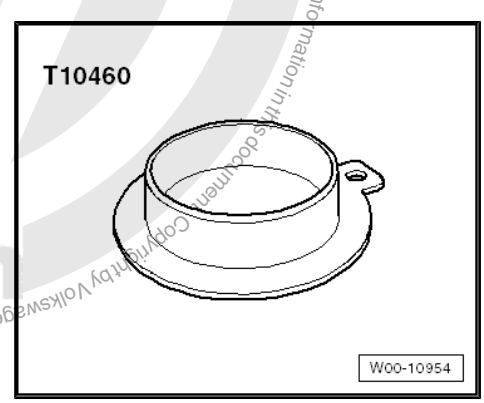

- Pulling Hook - T20143/1-

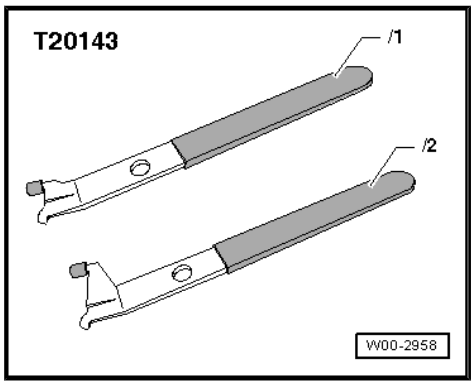

- Hose Clip Pliers - VAG1275A-

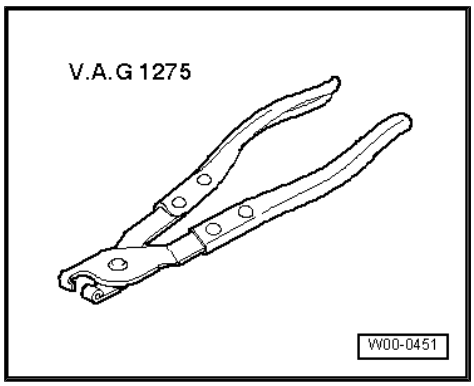

- Engine and Transmission Holder - VAS6095-

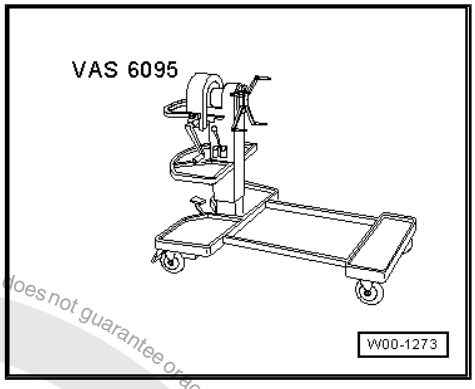

- Shop Crane - VAS6100-

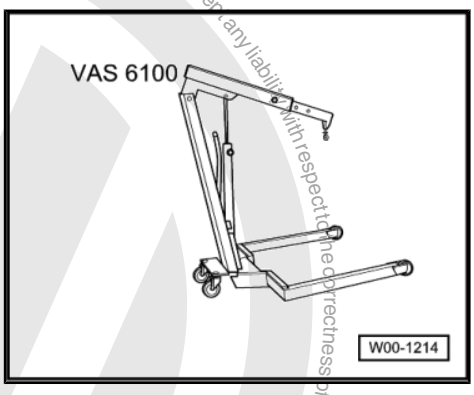

- Drip Tray for VAS6100 - VAS6208-

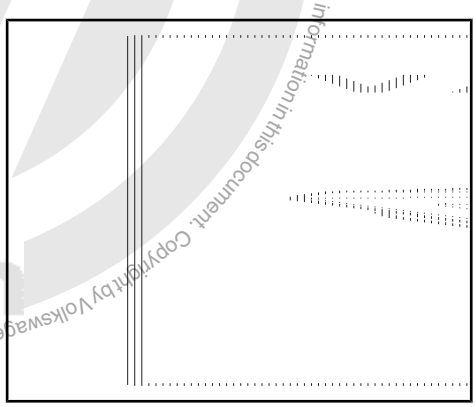

- Charging Device For Haldex Coupling 2 - VAS6291A-

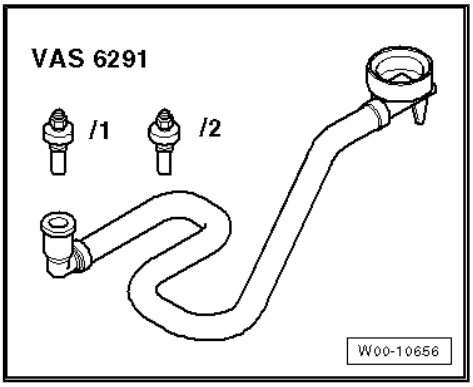

- Charging Device For Haldex Coupling 2 - Adapter 3 - VAS6291/3-

Protected by copyright. Copying for private or commercial purposes, in part or in whole, is not permitted unless authorised by Volkswagen AG. Volkswagen AG does not guarantee or accept any liability with respect to the correctness of information in this document. Copyright by Volkswagen AG.

- It is necessary to use the Oil Filler - Adapter 6 - VAS6262/6- on some oil containers.

- Sleeve - VW423-

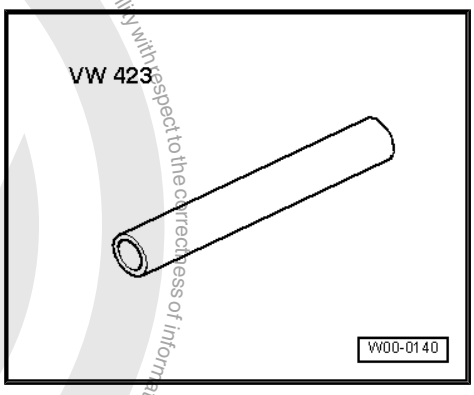

- -1- Puller - Kukko Internal - 14-19mm - 21/2-

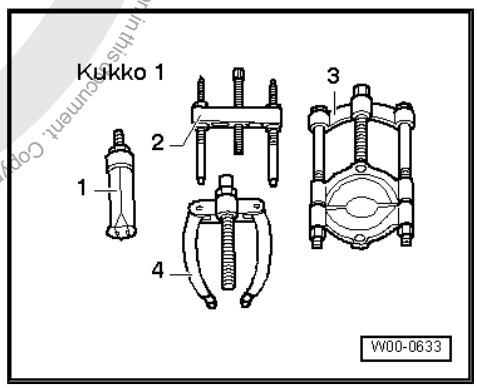

- -1- Puller - Kukko Internal - 20-30mm - 21/4-
- -4- Puller - Kukko Counterstay - 22/2-
- Thread adaptor from Puller - Kukko Counterstay - 22/1-

Protected by copyright. Copying for private or commercial purposes, in part or in whole, is not permitted unless authorised by Volkswagen AG. Volkswagen AG does not guarantee or accept any liability with respect to the correctness of information in this document. Copyright by Volkswagen AG.

Protected by copyright. Copying for private or commercial purposes, in part or in whole, is not permitted unless authorised by Volkswagen AG. Volkswagen AG does not guarantee or accept any liability with respect to the correctness of information in this document. Copyright by Volkswagen AG.

- Transmission Support Jig - 3336-

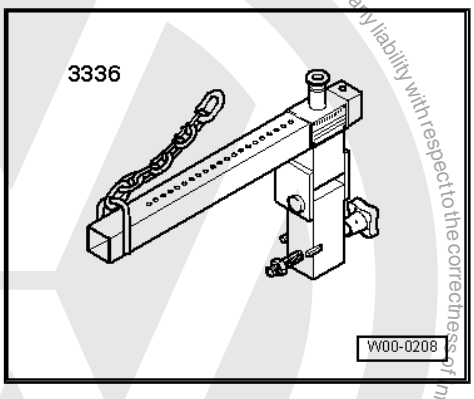

- Triple Square Socket Driver - 3357-

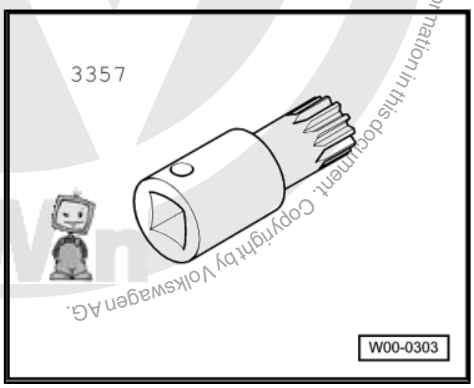

nercial purposes or part of in whole, is not permitted unless authorised by Volkswagen AG. Volkswagen AG does not guarantee or accept any liability with respect to the correctness of information in this do

17 Special Tools

Special tools and workshop equipment required

- Bearing Driver - Multiple Use - VW244B-
- Transmission Support - VW353-
- Press Plate - VW401-
- Press Plate - VW402-
- Press Piece - Rod - VW407-
- Press Piece - 37mm - VW416B-

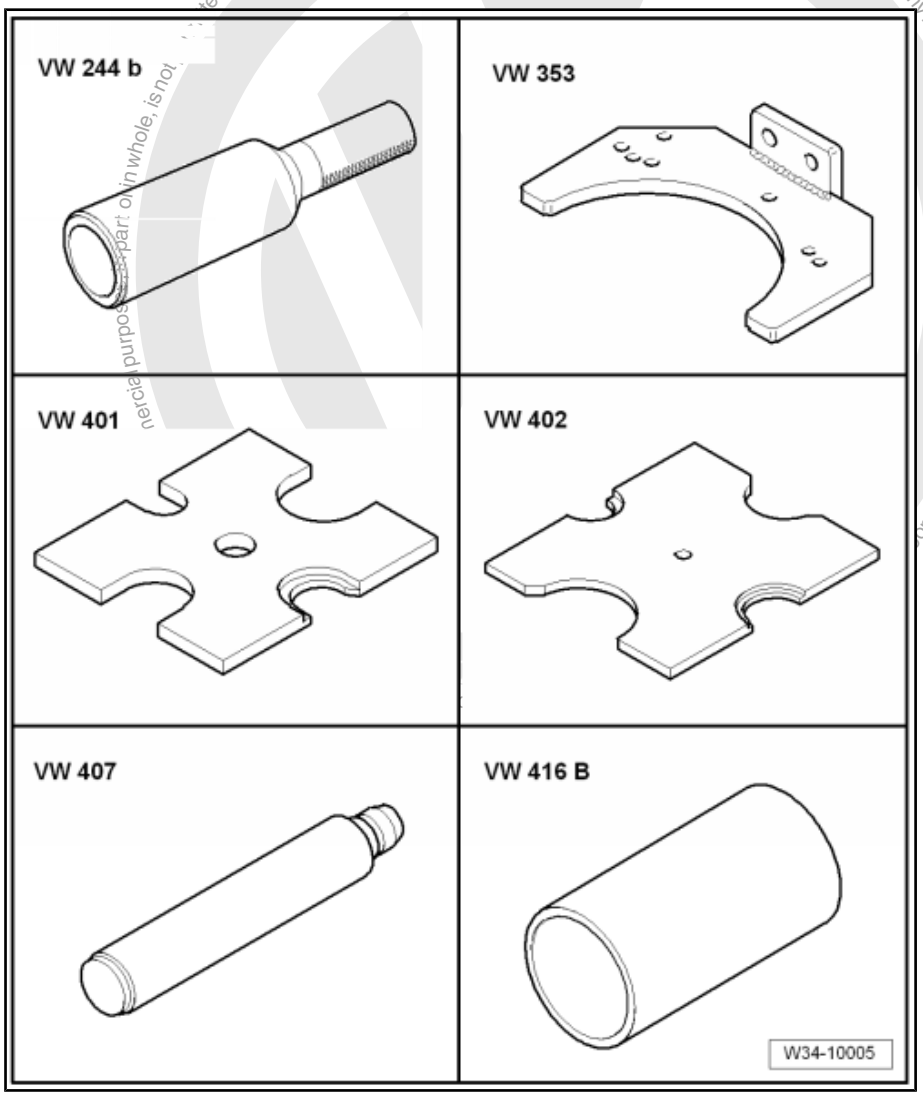

- Guide Pin - VW436A-
- Press Piece - Guide Pin - VW439-
- Slide Hammer Set - Hammer - VW771-
- Crankshaft Holding Fixture - VW801-
- Guide Pins - 10-15-
- Press Piece - Pivot Mount Bushing - 3124-

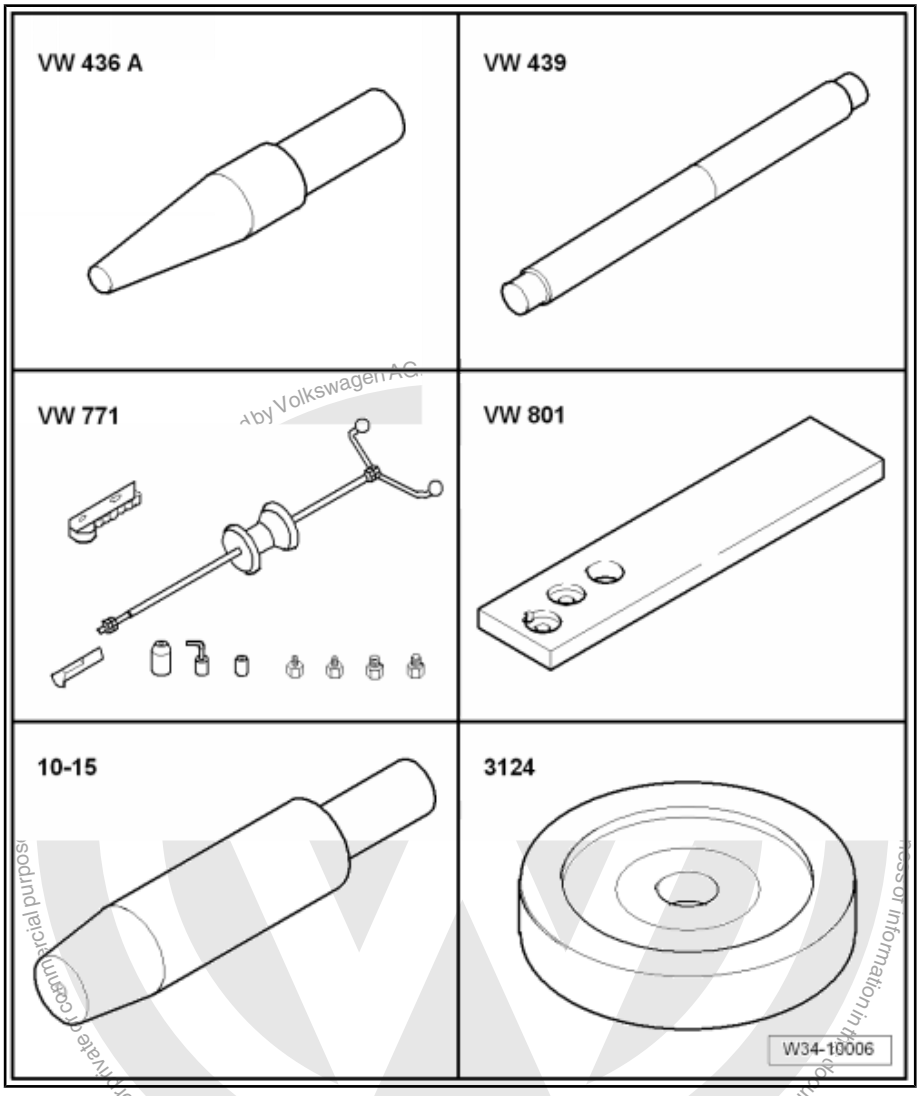

Protected by copyright. Copying for private or commercial purposes, in part, is not permitted unless authorized by Volkswagen AG. Copyright by Volkswagen AG.

Protected by copyright. Copying for private or commercial purposes, in part or in whole, is not permitted unless authorised by Volkswagen AG. Volkswagen AG does not guarantee or accept any liability with respect to the correctness of information in this document. Copyright by Volkswagen AG.

- Bracket - Multiple Use - 30-211A-
- Seal Installer - Crankshaft - T10042-
- Locking Sleeve Drift - T10169-
- or Locking Sleeve Drift - T10362-
  ⇒ Fig. ""Lock Sleeve Differentiation"" , page 266
- Seal Installer - Driveshaft - T40008-
- Torque Wrench 1331 5-50Nm - VAG1331-
- Hot Air Blower - VAG1416-

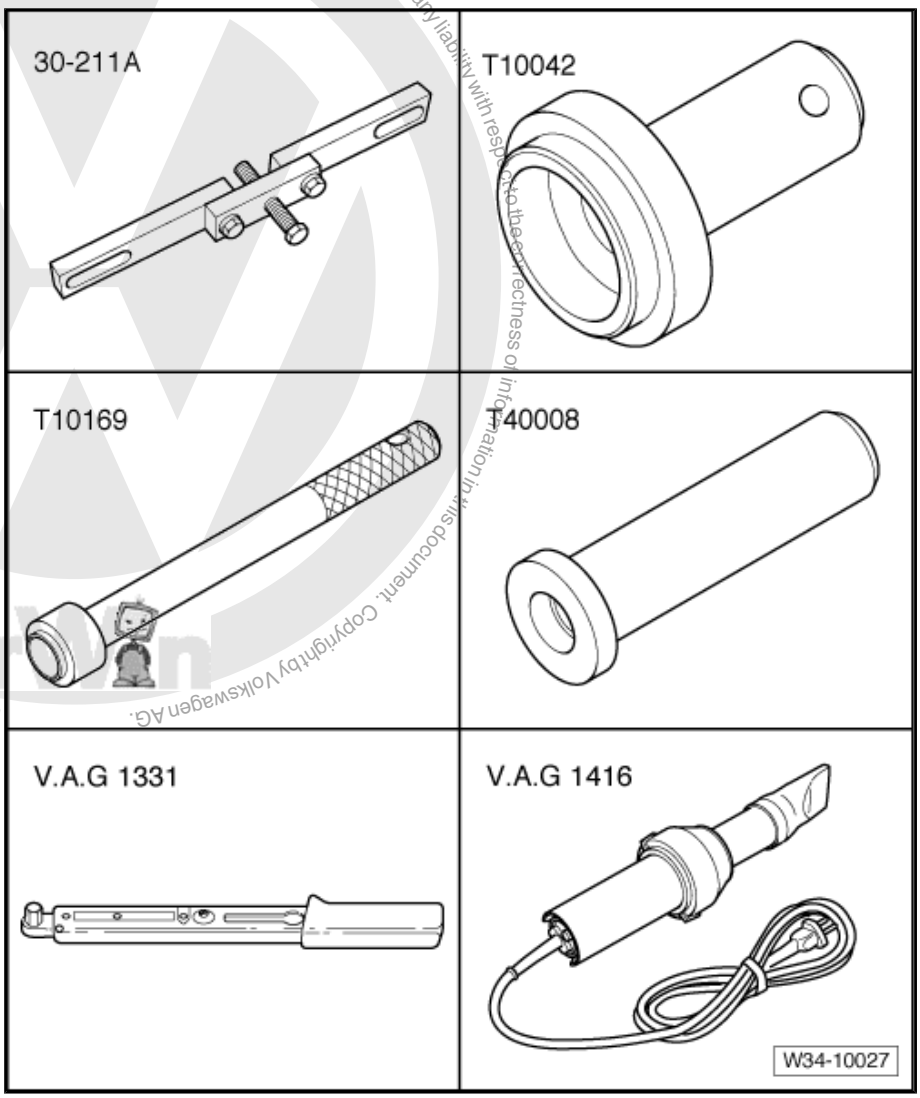

- Bearing Installer - Crankshaft Pilot Bearing - 3264-
- Subframe Support Tool - 3290-
- Torque Wrench 1331 5-50Nm - VAG1331-
- Bushing Driver - Selector Shaft - T10168-
- Locking Sleeve Drift - T10169- or Locking Sleeve Drift - T10362-
  ⇒ Fig. ""Lock Sleeve Differentiation"" , page 266
- Breather Tube Tool - T10203-

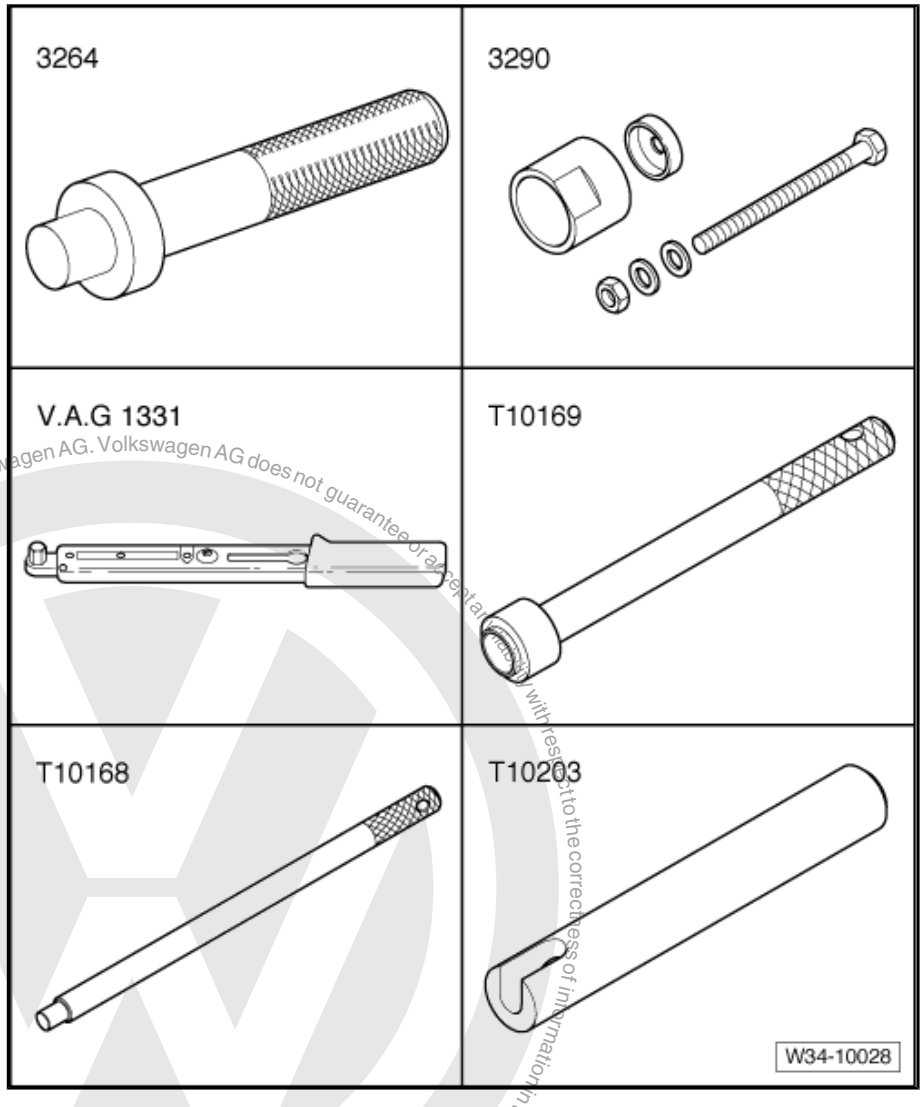

Protected by copyright. Copying for private or commercial purposes, in part or in whole, is not permitted unless authorised by Volkswagen AG. Volkswagen AG does not guarantee or assume any liability with respect to the correctness of information in this document. Copyright by Volkswagen AG.

- Holding Plate - VW309A-
- Holding Fixture - VW313-
- Transmission Support - VW353-
- Press Piece - Multiple Use - VW455- or Press Piece - Front Wishbone - 3160-
- Slide Hammer Set - VW771-
- -1- Puller - Kukko Internal - 12-16mm - 21/1-
- -3- Puller - Kukko Quick Action Separating Tool - 5-60mm - 17/0-
- -4- Puller - Kukko Counter-stay - 22/1-

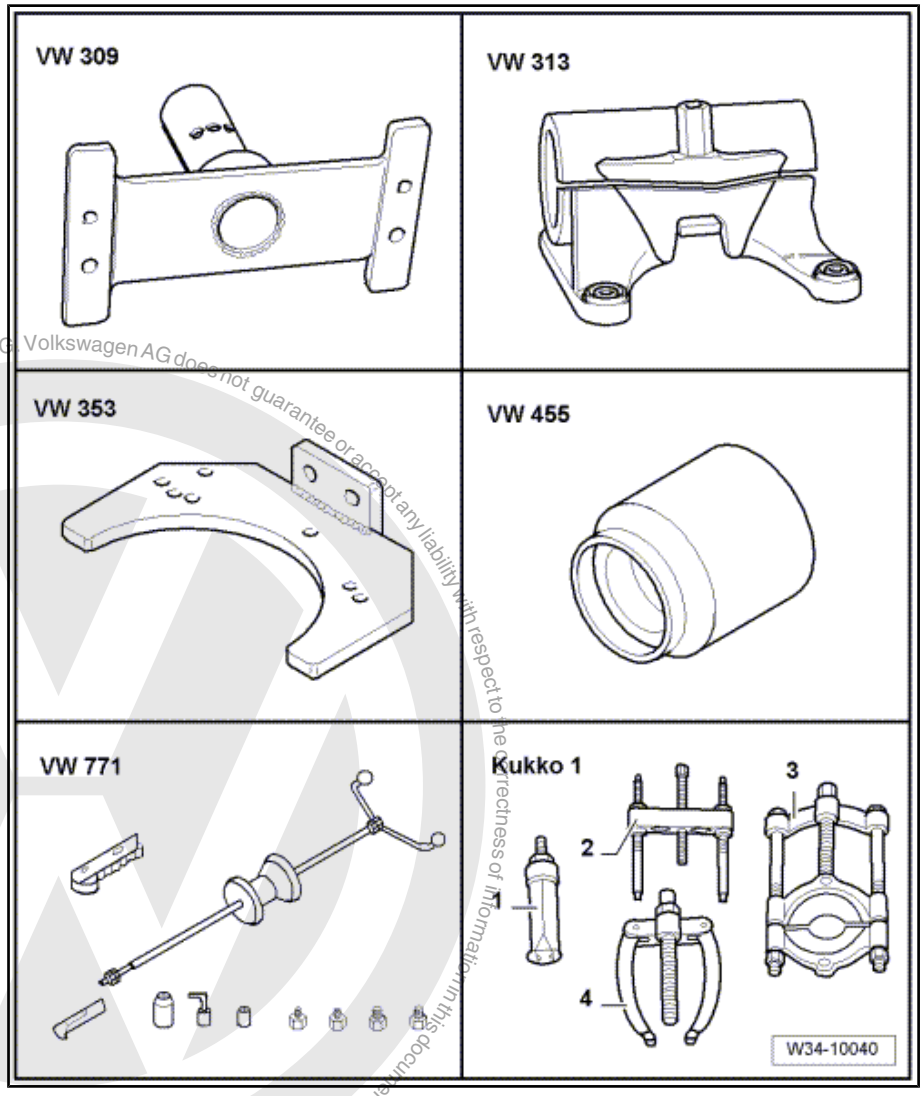

Protected by copyright. Copying for private or commercial purposes, in part or in whole, is not permitted unless authorised by Volkswagen AG. Volkswagen AG does not guarantee or accept any liability with respect to the correctness of information in this document. Copyright by Volkswagen AG.

- Press Piece - Rod - VW407-
- Bushing Driver - Selector Shaft - T10168-
- Seal Installer - Driveshaft - T40008-
- -1- Puller - Kukko Internal - 14-19mm - 21/2-
- -1- Puller - Kukko Internal - 20-30mm - 21/4-
- -4- Puller - Kukko Counter-stay - 22/1-
- -4- Puller - Kukko Counter-stay - 22/2-

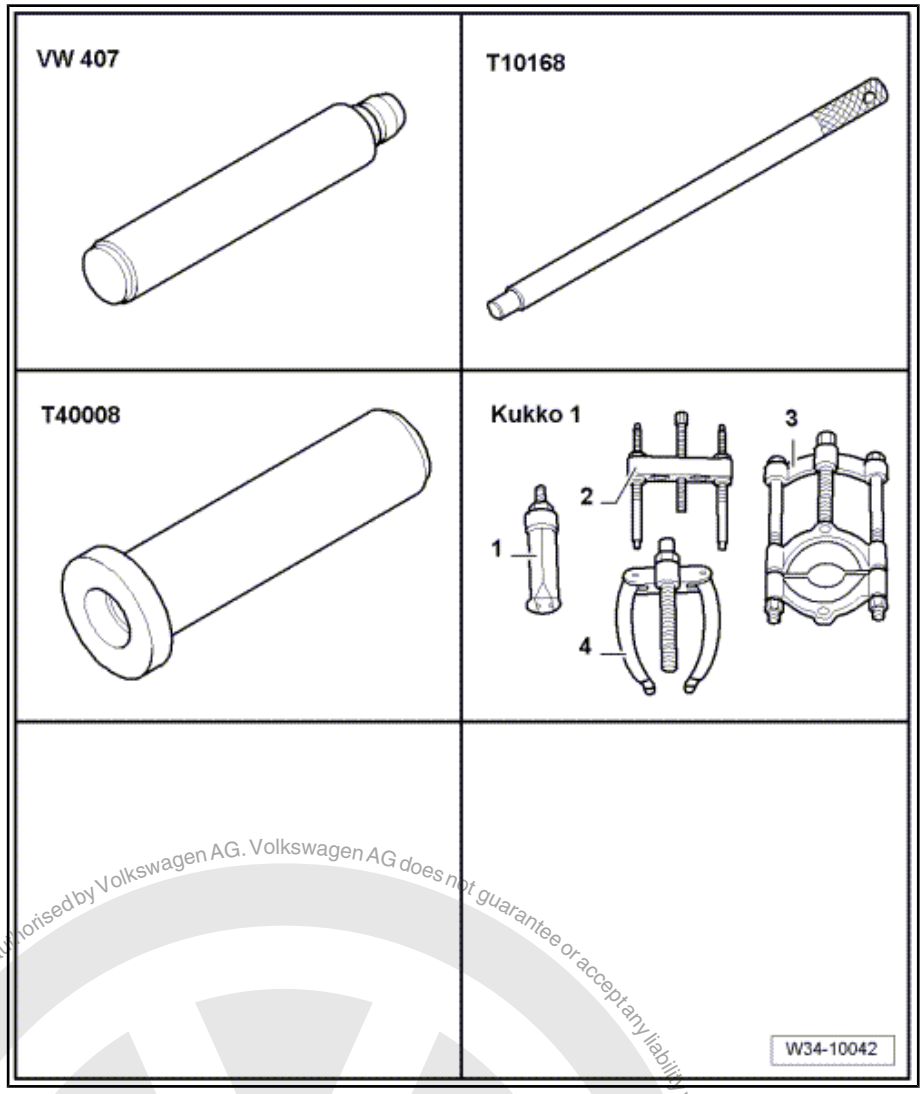

Protected by copyright. Copying for private or commercial purposes, in part or in whole, is not permitted unless authorised by Volkswagen AG. Volkswagen AG does not guarantee or accept any liability with respect to the correctness of information in this document. Copyright by Volkswagen AG.

- Engine Support Bridge - 10-222A-
- Transmission Support - 3282-
- Engine and Gearbox Jack - VAS6931-
- Tensioning Strap - T10038-
- Engine Support - Basic Set - T40091-
- Engine Support - Supplement Kit - T40093A-

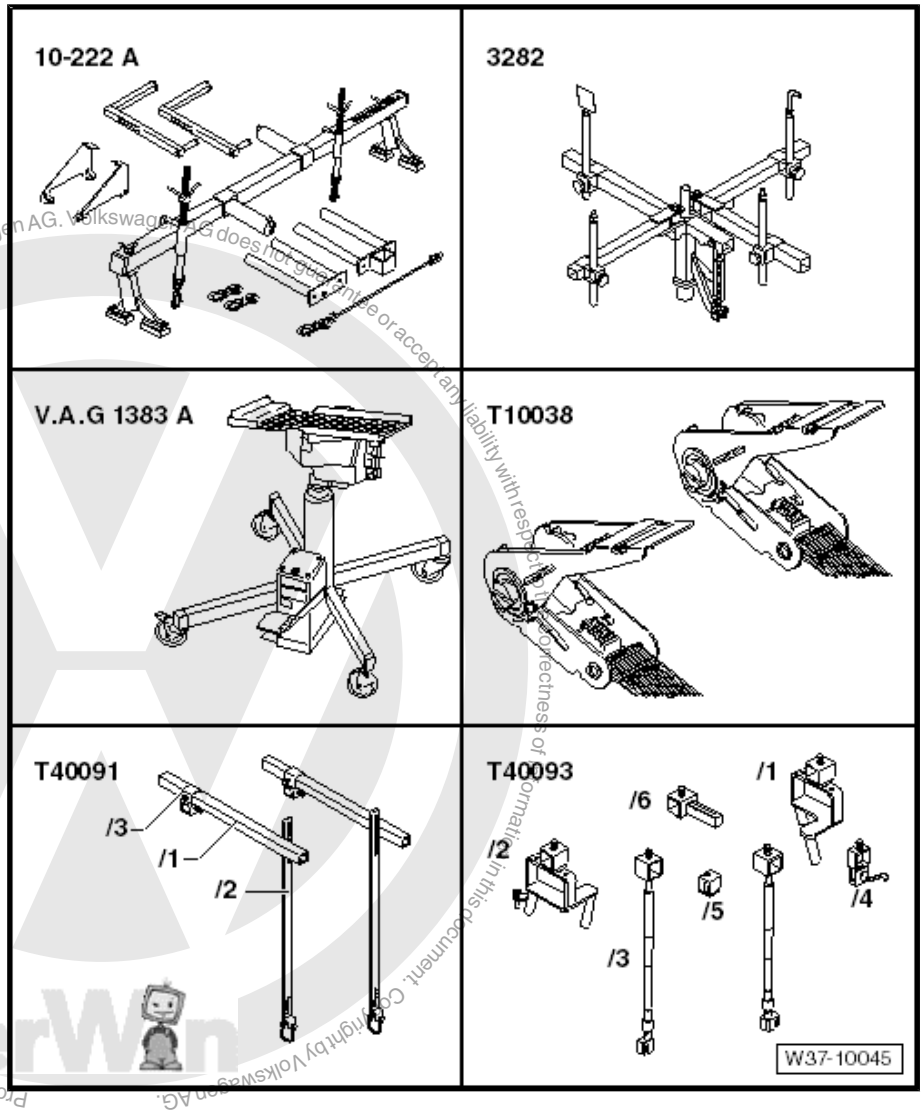

Protected by copyright. Copying for private or commercial purposes, in part or in whole, is not permitted unless authorised by Volkswagen AG. Volkswagen AG does not guarantee or accept any liability with respect to the correctness of information in this document. Copyright by Volkswagen AG.

- Press Plate - VW402-
- Press Piece - Rod - VW411-
- Press Piece - Multiple Use - VW426-
- Press Piece - Multiple Use - VW431-
- -1- Puller - Kukko Internal - 18.5-23.5mm - 21/3-
- -4- Puller - Kukko Counter-stay - 22/1-

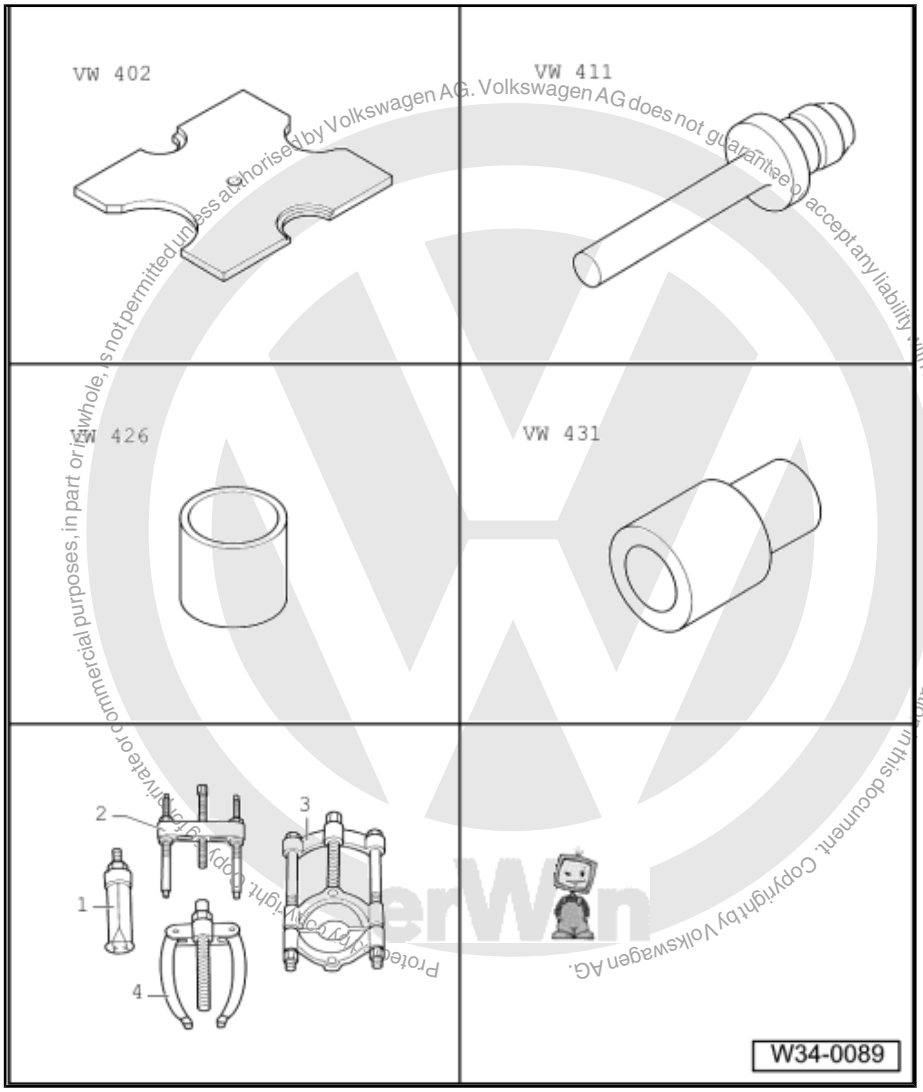

Protected by copyright. Copy for private or commercial purposes, in part or in whole, is not permitted unless authorised by Volkswagen AG. Volkswagen AG does not guarantee or accept any liability with respect to the correctness of information in this document. Copyright by Volkswagen AG.

- Bracket - Multiple Use - 30-211A-
- Seal Installer - Drive Flange - T10143- or Seal Installer - Output Shaft Oil Seal - T10180-
- Locking Sleeve Drift - T10169-
- or Locking Sleeve Drift - T10362-
  ⇒ Fig. ""Lock Sleeve Differentiation"" , page 266
- Seal Installer - Driveshaft - T40008-
- Torque Wrench 1331 5-50Nm - VAG1331-
- Hot Air Blower - VAG1416-

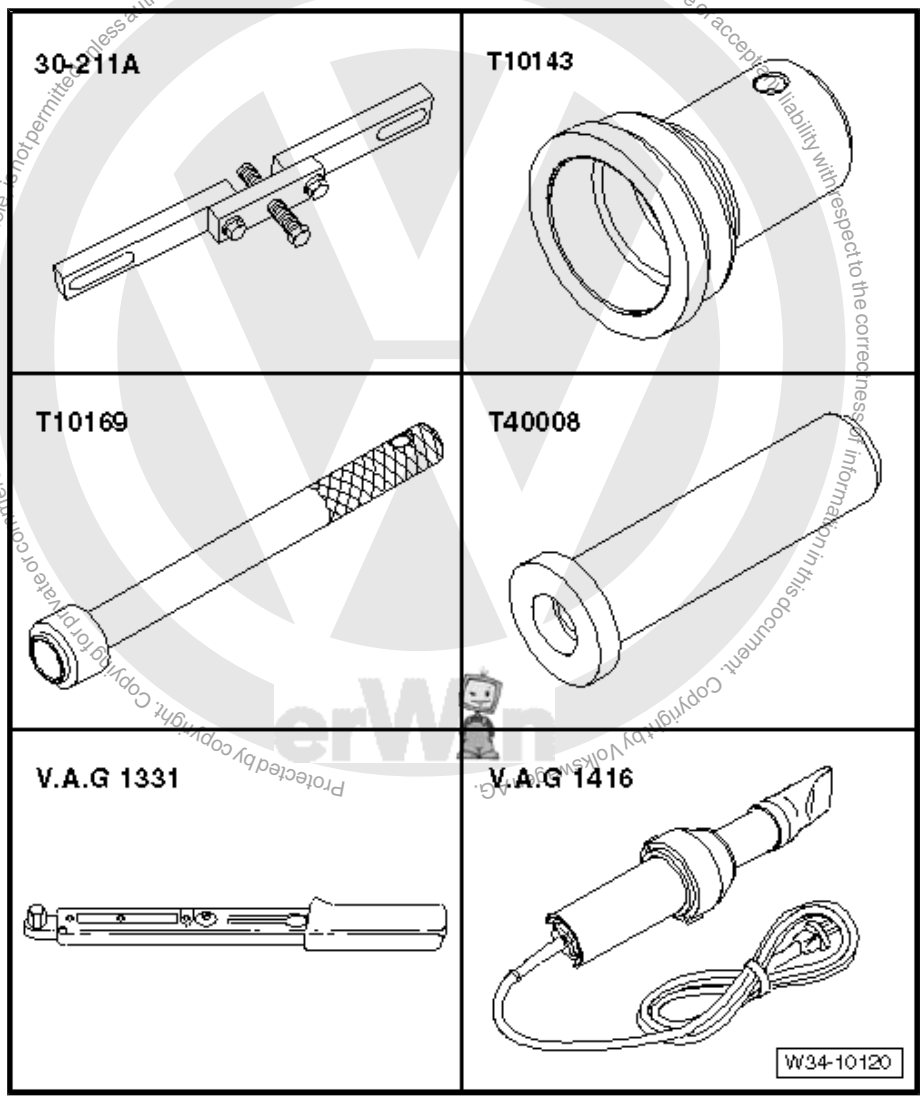

Protected by copyright. Copying for private or commercial purposes, in part or in whole, is not permitted unless authorised by Volkswagen AG. Volkswagen AG does not guarantee or accept any liability with respect to the correctness of information in this document. Copyright by Volkswagen AG.

- Window Release Tool - T10236-
- Press Piece - Multiple Use - VW412-
- Over-Center Spring Assembly Tool - T10178- or flat iron, 200 x 25 x 5 mm
- Engine Support Bridge - Engine Support 25 - 10-222A/25- or flat iron, 350 X 30 X 5 mm
- - 4- = Puller - Counterstay , for example -22/4-
- Wedge - T10357-

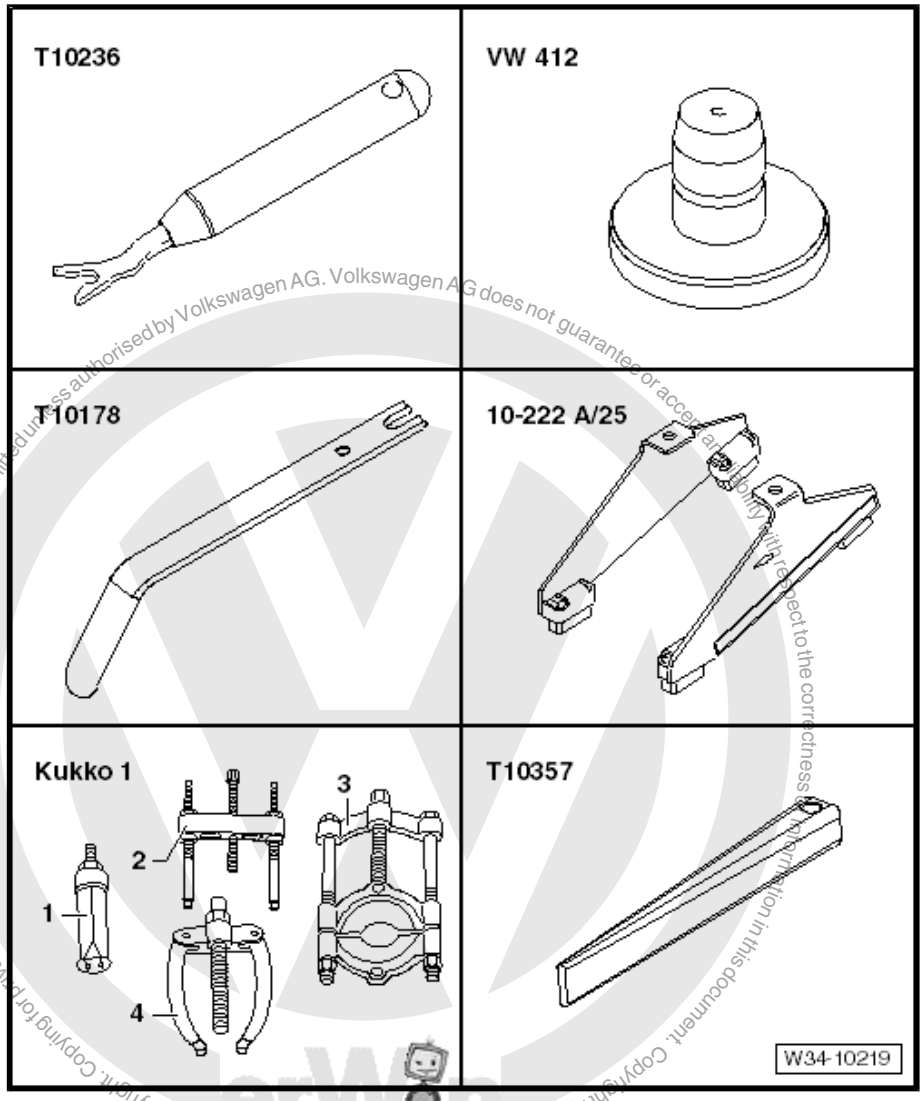

- Used Oil Collection and Extraction Unit - SMN372500-

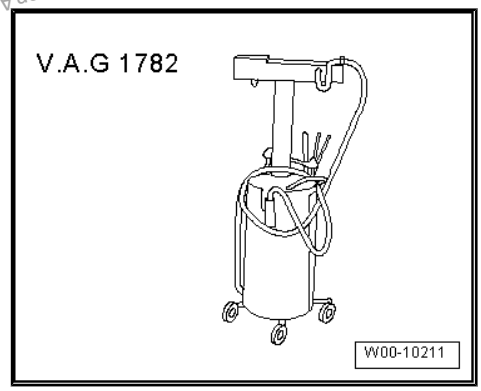

Protected by copyright. Copying for private or commercial purposes, in part or in whole, is not permitted unless authorised by Volkswagen AG. Volkswagen AG does not guarantee or accept any liability with respect to the correctness of information in this document. Copyright by Volkswagen AG.

- Connecting Pin - T10027A-

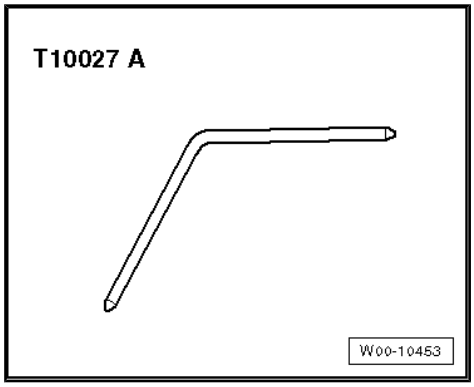

- Thrust Block - T10083-

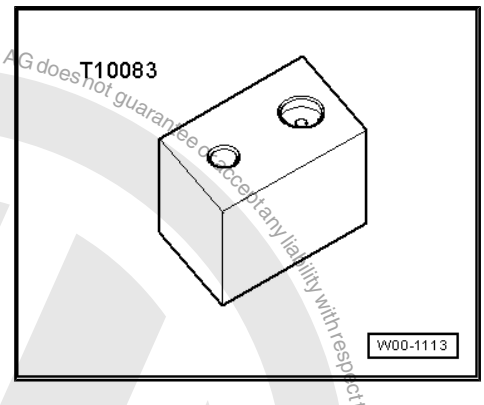

- Pulling Hook - T20143/1-

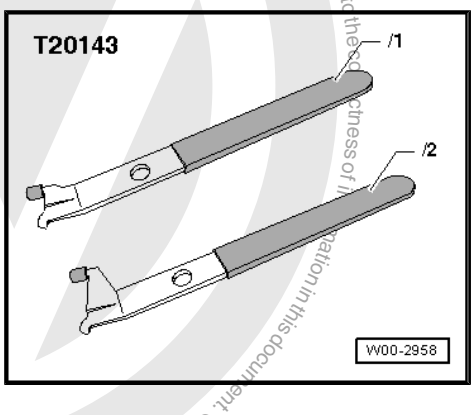

- Hose Clip Pliers - VAG1275A-

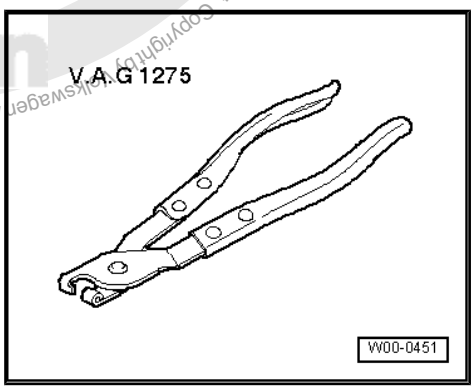

Protected by copyright. Copying for private or commercial purposes, in part or in whole, is not permitted unless authorised by Volkswagen AG. Volkswagen AG does not guarantee or accept any liability with respect to the correctness of information in this document. Copyright by Volkswagen AG.

Protected by copyright. Copying for private or commercial purposes, in part or in whole, is not permitted unless authorised by Volkswagen AG. Volkswagen AG does not guarantee or accept any liability with respect to the correctness of information in this document. Copyright by Volkswagen AG.

- Engine and Transmission Holder - VAS6095-

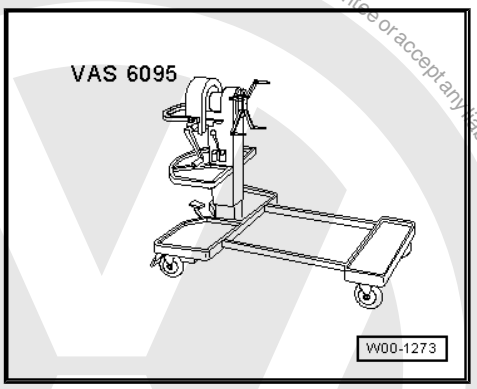

- Shop Crane - VAS6100-

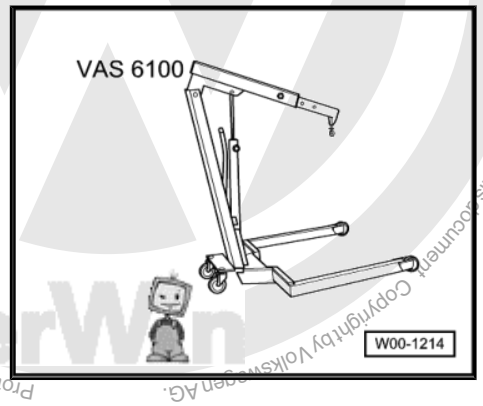

- Drip Tray for VAS6100 - VAS6208-

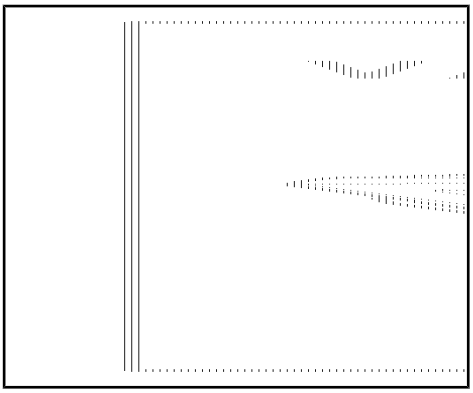

- Press Piece - Shift Rod/Alternator - VW423-

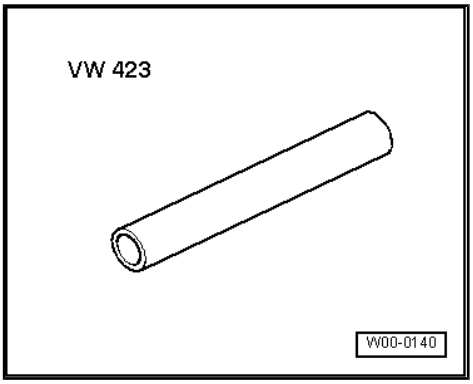

Protected by copyright. Copying for private or commercial purposes, in part or in whole, is not permitted unless authorised by Volkswagen AG. Volkswagen AG does not guarantee or accept any liability with respect to the correctness of information in this document. Copyright by Volkswagen AG.

- -1- Puller - Kukko Internal - 14-19mm - 21/2-

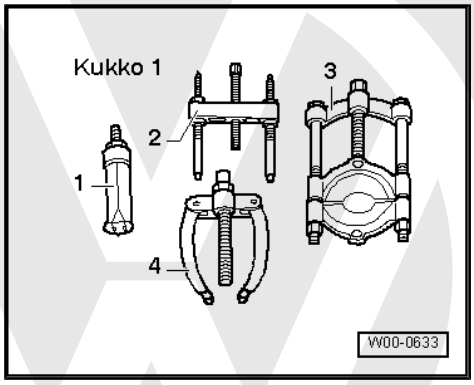

- -1- Puller - Kukko Internal - 20-30mm - 21/4-
- -4- Puller - Kukko Counterstay - 22/2-
- Thread adaptor from Puller - Kukko Counterstay - 22/1-
- Hose Clamps - Up To 25mm - 3094-

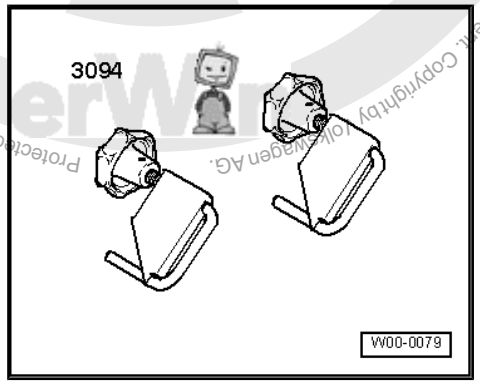

- Transmission Support - Pins 29 - 3282/29-

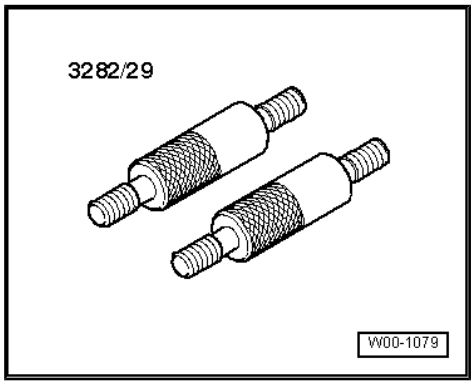

- Transmission Support - Mounting Plate 33 - 3282/33-

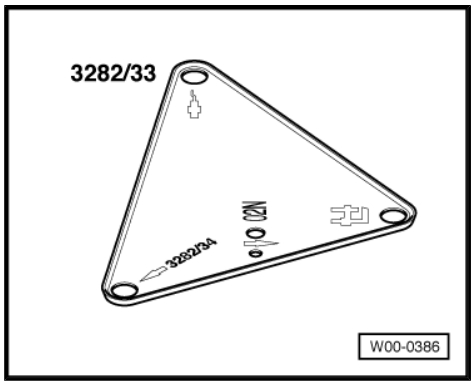

- Transmission Support Jig - 3336-

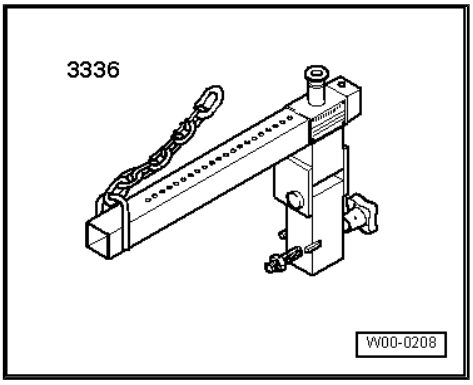

- Triple Square Socket Driver - 3357-

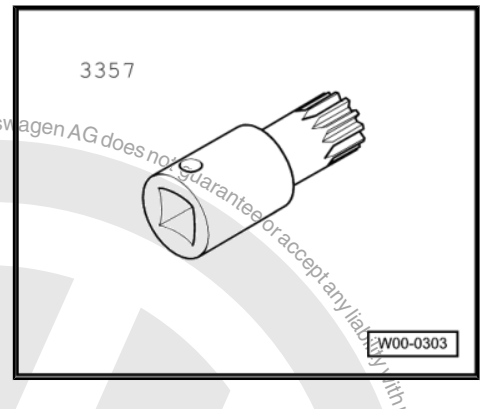

Protected by copyright. Copying for private or commercial purposes, in part or in whole, is not permitted unless authorised by Volkswagen AG. Volkswagen AG does not guarantee or accept any liability with respect to the correctness of information in this document. Copyright by Volkswagen AG.

35 – Gears, Shafts

1 Input Shaft

⇒ "1.1 Overview - Input Shaft", page 310

⇒ "1.2 Input Shaft, Disassembling and Assembling", page 311

1.1 Overview - Input Shaft

Note

- *Secure the transmission on the assembly stand. Refer to ⇒ "7 Transmission, Securing in Engine/Transmission Holder", page 191 .*
- *Warm the toothed gear to approximately 100 °C (212 °F) using Inductive Heater - VAS6414- . Wear protective gloves.*
- *Install all input shaft bearings with transmission fluid.*
- *Replace grooved ball bearing -item 6- ⇒ Item 6 (page 311) after removing.*

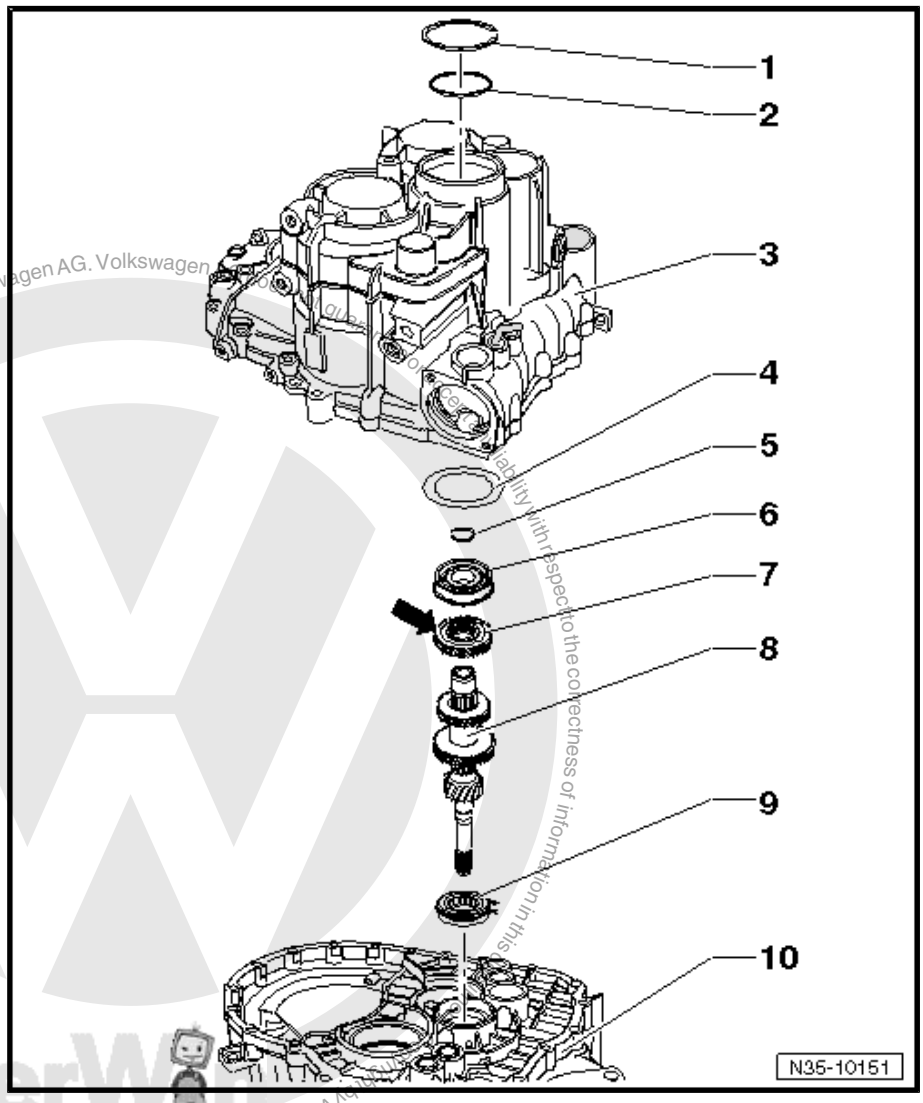

1 - Circlip

- ❑ For the grooved ball bearing/input shaft -item 6- ⇒ Item 6 (page 311) .
- ❑ Removing and installing. Refer to ⇒ "11.8 Assembly Sequence, Transmission without a Securing Ring A for the Metal Cover for the Input Shaft", page 235 .

2 - Washer

- ❑ Outer circumference = 78.6 mm
- ❑ Only insert with the changed transmission housing (from transmission production date 04/10/2006 through approximately 01/20/2008). Refer to ⇒ "1.2.1 Grooved Ball Bearing Changes", page 315 .
- ❑ Refer to the Parts Catalog.

3 - Transmission Housing

- ❑ Adapted in the grooved ball bearing seat area -item 6- ⇒ Item 6 (page 311) and washers -item 2- ⇒ Item 2 (page 310) and -item 4- ⇒ Item 4 (page 311) from transmission build

Protected by Copyright. Copying for private or commercial purposes, in part or in whole, is not permitted unless authorised by Volkswagen AG. Volkswagen AG does not guarantee or accept any liability with respect to the correctness of information in this document.

date 4/10/06 through approximately 1/20/08. Refer to
⇒ “1.2.1 Grooved Ball Bearing Changes”, page 315 .

- ❑ Flattened areas on grooved ball bearing and bearing seat approximately from transmission build date 1/21/2008. Refer to ⇒ “1.2.1 Grooved Ball Bearing Changes”, page 315 .
- ❑ Refer to the Parts Catalog.

4 - Washer

- ❑ Outer diameter = 85 mm
- ❑ Only insert with the changed transmission housing (from transmission production date 04/10/2006 through approximately 01/20/2008). Refer to ⇒ “1.2.1 Grooved Ball Bearing Changes”, page 315 .
- ❑ Refer to the Parts Catalog.

5 - Circlip

- ❑ Select when replacing the grooved ball bearing -item 6- ⇒ Item 6 (page 311) and the input shaft -item 8- ⇒ Item 8 (page 311) . Refer to
⇒ Fig. ““Determining the Grooved Ball Bearing Locking Ring on the Input Shaft”“ , page 314

6 - Grooved Ball Bearing

- ❑ Replace after removing
- ❑ Removing. Refer to ⇒ Fig. ““Removing the Grooved Ball Bearing”“ , page 312 .
- ❑ Installation position. Refer to
⇒ Fig. ““Grooved Ball Bearing Installation Location and Installing the Grooved Ball Bearing”“ , page 313 .
- ❑ Installing. Refer to
⇒ Fig. ““Grooved Ball Bearing Installation Location and Installing the Grooved Ball Bearing”“ , page 313 .
- ❑ Flattened areas on grooved ball bearing and bearing seat approximately from transmission build date 1/21/2008. Refer to
⇒ Fig. ““Flattened Areas on the Grooved Ball Bearing -A- and Bearing Seat -B- in the Transmission Housing Approximately from Transmission Build Date 2/21/08.”“ , page 316 .

7 - 5th Gear Wheel

- ❑ Available as a replacement part together with the input shaft
- ❑ Removing. Refer to ⇒ Fig. ““Removing the 5th Gear Wheel”“ , page 312 .
- ❑ Installed position: the surrounding groove -arrow- points toward grooved ball bearing -item 6- ⇒ Item 6 (page 311)
- ❑ Installing. Refer to ⇒ Fig. ““Warming the 5th Gear Wheel and Installing”“ , page 313 .

8 - Input Shaft

- ❑ With 3rd/4th and 6th gear wheel

9 - Cylindrical Roller Bearing

- ❑ With circlip
- ❑ Removing. Refer to
⇒ Fig. ““Removing the Cylindrical Roller Bearing from the Clutch Housing”“ , page 314 .
- ❑ Installing. Refer to ⇒ Fig. ““Pressing Cylindrical Roller Bearing Into Clutch Housing.”“ , page 314 .
- ❑ Installed position: the circlip in bearing points to input shaft

10 - Clutch Housing

1.2 Input Shaft, Disassembling and Assembling

Special tools and workshop equipment required

- ♦ Press Plate - VW401-
- ♦ Press Plate - VW402-
- ♦ Press Piece - Rod - VW407-
- ♦ Press Piece - Rod - VW408A-

Protected by copyright. Copyright by Volkswagen AG.
Vorsprung durch Technik
Volkswagen AG does not guarantee or accept any liability with respect to the correctness of information in this document. Copyright by Volkswagen AG.

Protected by Volkswagen AG. Volkswagen AG does not guarantee or accept any liability with respect to the correctness of information.

- Press Piece - Rod - VW412-
- Press Piece - Multiple Use - VW454-
- Press Piece - Bushing - 50mm Diameter - VW432-
- Locking Pin Driver - 30-505-
- Bearing Installer - Multiple Use - 32-111-
- Inductive Heater - VAS6414-
- Puller - Kukko Internal - 28-37mm - 21/5-
- Puller - Kukko Quick Action Separating Tool - 22-115mm - 17/2-
- Puller - Kukko Counterstay - 22/2-
- Feeler Gauge

Input Shaft, Disassembling

– Remove the grooved ball bearing locking ring.

Removing the Grooved Ball Bearing

– Mount the Separating Tool -A- into the groove in the ball bearing for the locking ring.

A - 22 to 115 mm Separating Tool , for example Puller - Kukko Quick Action Separating Tool - 22-115mm - 17/2-

– The grooved ball bearing and 5th gear wheel can also be removed together. To do this, place the Separating Tool -A- as shown in the following illustration under the 5th gear wheel.

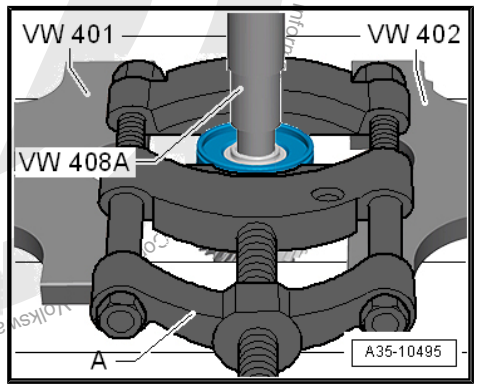

Removing the 5th Gear Wheel

A - 22 to 115 mm Separating Tool , for example Puller - Kukko Quick Action Separating Tool - 22-115mm - 17/2-

Input Shaft, Assembling

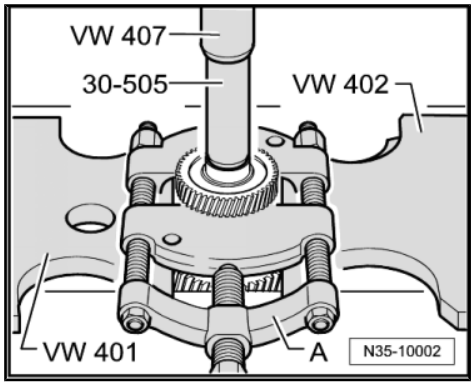

Warming the 5th Gear Wheel and Installing

- The groove -arrow- on the gear wheel must face up.

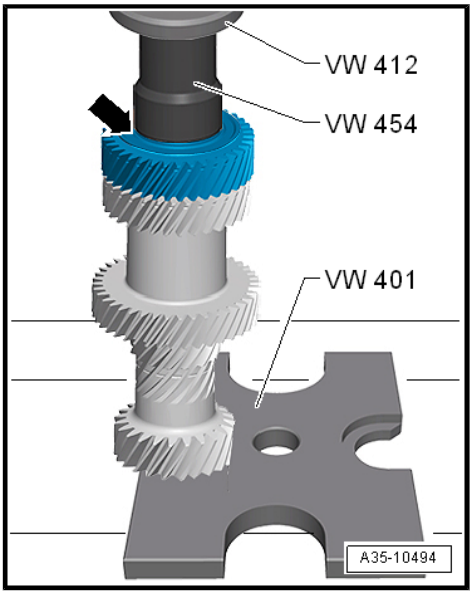

Grooved Ball Bearing Installation Location and Installing the Grooved Ball Bearing

- Grooved ball bearing installation location: the groove for the circlip faces up -arrow A-. The collar -arrow B- must face the 5th gear wheel.

– Install the grooved ball bearing securing ring on the input shaft (⇒ next figure).

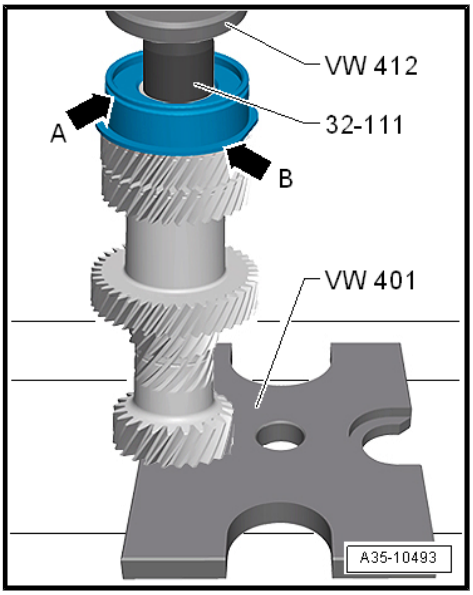

Protected by copyright. Copying for private or commercial purposes, in part or in whole, is not permitted unless authorised by Volkswagen AG. Volkswagen AG does not guarantee or accept any liability with respect to the correctness of information in this document. Copyright by Volkswagen AG.

Determining the Grooved Ball Bearing Locking Ring on the Input Shaft

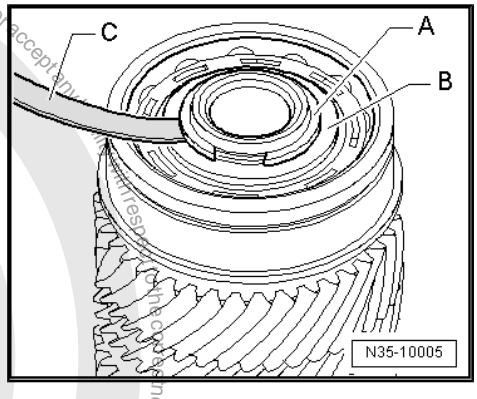

- Insert a 1.86 mm locking ring -A- into groove in the input shaft and press it upward.
- Measure the gap between the grooved ball bearing -B- and the installed locking ring -A- with a feeler gauge -C-.
- Remove the locking ring used for the measurement.
- Select the locking ring according to the Table.

Note

Allocate the correct locking rings. Refer to the Parts Catalog.

The following locking rings are available:

Measured Value (mm)	Circlip Thickness (mm)	Axial Play (mm)
0.01 to 0.05	1.86	0.01 to 0.05
0.05 to 0.07	1.89	0.01 to 0.05
0.07 to 0.10	1.92	0.01 to 0.05
0.10 to 0.13	1.95	0.01 to 0.05
0.13 to 0.16	1.98	0.01 to 0.05

Removing the Cylindrical Roller Bearing from the Clutch Housing

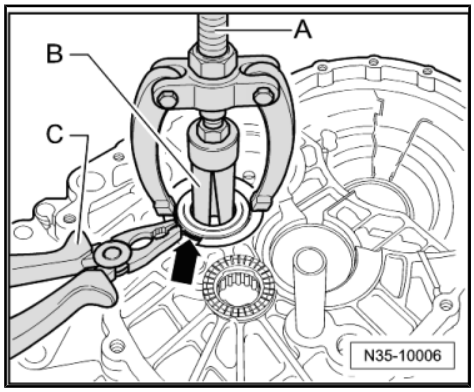

- Compress the cylindrical roller bearing locking ring -arrow- with pliers -C- and remove it.

A - Counter Support , for example, Puller - Kukko Counterstay - 22/2-

B - Internal Puller 30 to 37 mm , for example, Puller - Kukko Internal - 28-37mm - 21/5-

Pressing Cylindrical Roller Bearing Into Clutch Housing.

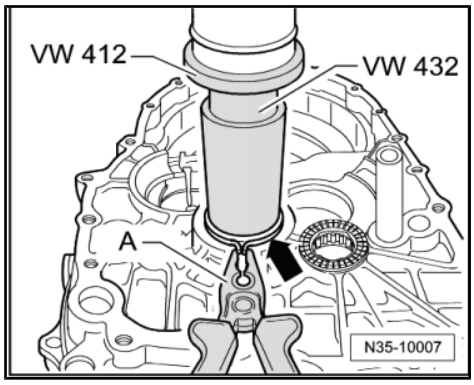

- Compress the cylindrical roller bearing locking ring -arrow- with pliers -C- and install it.
- Remove the pliers before the cylindrical roller bearing gets into its installed position. The locking ring must lock into the groove on the clutch housing.

1.2.1 Grooved Ball Bearing Changes

From Transmission Build Date 04.10.2006 through Approximately 01/21/2008

A washer above and below the grooved ball bearing seat -item 6- ⇒ Item 6 (page 311) .

Above the Bearing Seat

Bearing Seat		Washer Above the Bearing Seat
Through transmission build date 4/9/06	Dimension “a” 10 mm	no
From transmission build date 4/10/06 through approximately 1/20/08	Dimension “a” 10.7 mm	yes
approximately from transmission build date 1/21/2008	Below the bearing seat flattened area for the grooved ball bearing	no

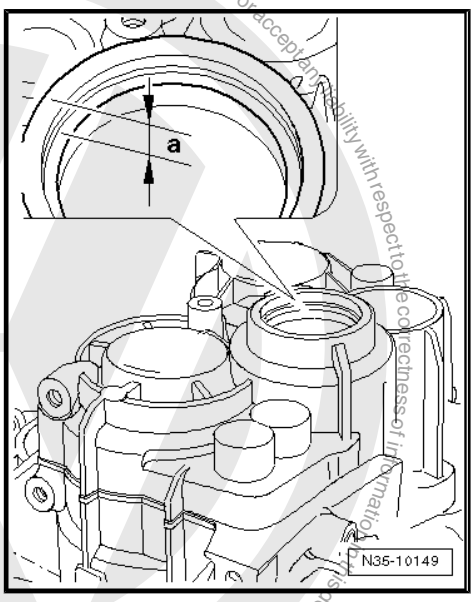

Below the Bearing Seat:

Slightly Deeper than from Transmission Build Date 10/04/2006 through Approximately 01/20/2008

The grooved ball bearing seat -arrow- is slightly deeper to hold the washer under the bearing -item 6- ⇒ Item 6 (page 311) .

Below the Bearing Seat		Washer Below the Bearing Seat
Through transmission build date 04/09/2006	Not deeper	no
From transmission build date 4/10/06 through approximately 1/20/08	Slightly deeper.	yes
approximately from transmission build date 1/21/2008	Flattened area -B- for the grooved ball bearing -A-	no

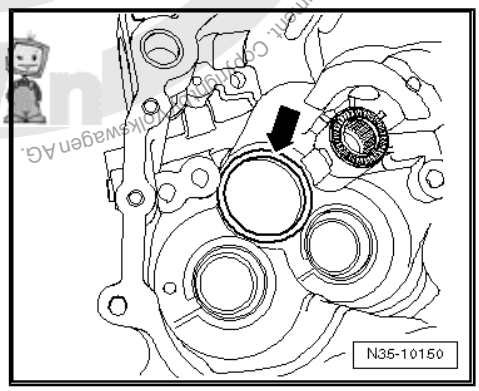

Volkswagen AG. Volkswagen AG does not guarantee or accept any liability with respect to the correctness of information in this document. Copyright by Volkswagen AG. Protected by copyright. Copying for private or commercial purposes, in part or in whole, is not permitted unless authorised by Volkswagen AG.

Flattened Areas on the Grooved Ball Bearing -A- and Bearing Seat -B- in the Transmission Housing Approximately from Transmission Build Date 2/21/08.

- If the flattened areas are present, do not insert any washers above and below the grooved ball bearing.

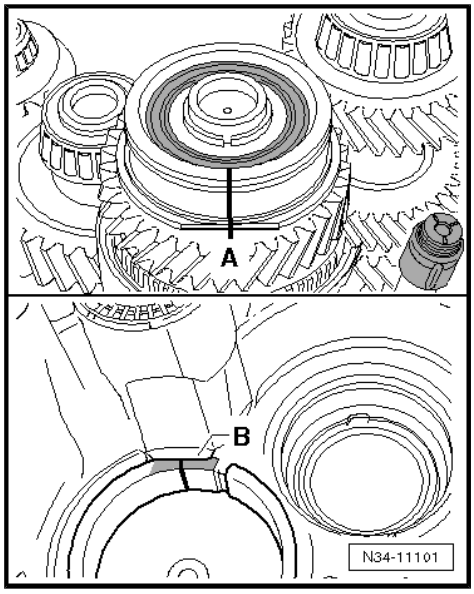

Protected by copyright. Copying for private or commercial purposes, in part or in whole, is not permitted unless authorised by Volkswagen AG. Volkswagen AG does not guarantee or accept any liability with respect to the correctness of information in this document. Copyright by Volkswagen AG.

2 1st through 4th Gear Output Shaft

⇒ “2.1 Overview - Output Shaft, 1st to 4th Gears”, page 317

⇒ “2.2 Output Shaft, 1st to 4th Gears, Disassembling and Assembling”, page 321

⇒ “2.3 Output Shaft 1st through 4th Gear, Adjusting”, page 340

2.1 Overview - Output Shaft, 1st to 4th Gears

Output Shaft, 1st to 4th Gears, Disassembling and Assembling.
Refer to
⇒ “2.2 Output Shaft, 1st to 4th Gears, Disassembling and Assembling”, page 321 .

Note

- *Secure the transmission on the assembly stand. Refer to* *⇒ “7 Transmission, Securing in Engine/Transmission Holder”, page 191* .
- *To install, warm the inner races/tapered roller bearing and synchronizer hub to approximately 100 °C (212 °F) using Inductive Heater - VAS6414-. Wear protective gloves.*
- *Adjust the output shaft if it or the tapered roller bearing are being replaced. Refer to* *⇒ “2.3 Output Shaft 1st through 4th Gear, Adjusting”, page 340* .
- *Replace both tapered roller bearings together.*

Protected by copyright. Copying for private or commercial purposes, in part or in whole, is not permitted unless authorised by Volkswagen AG. Volkswagen AG does not guarantee or accept any liability with respect to the correctness of information in this document. Copyright by Volkswagen AG.

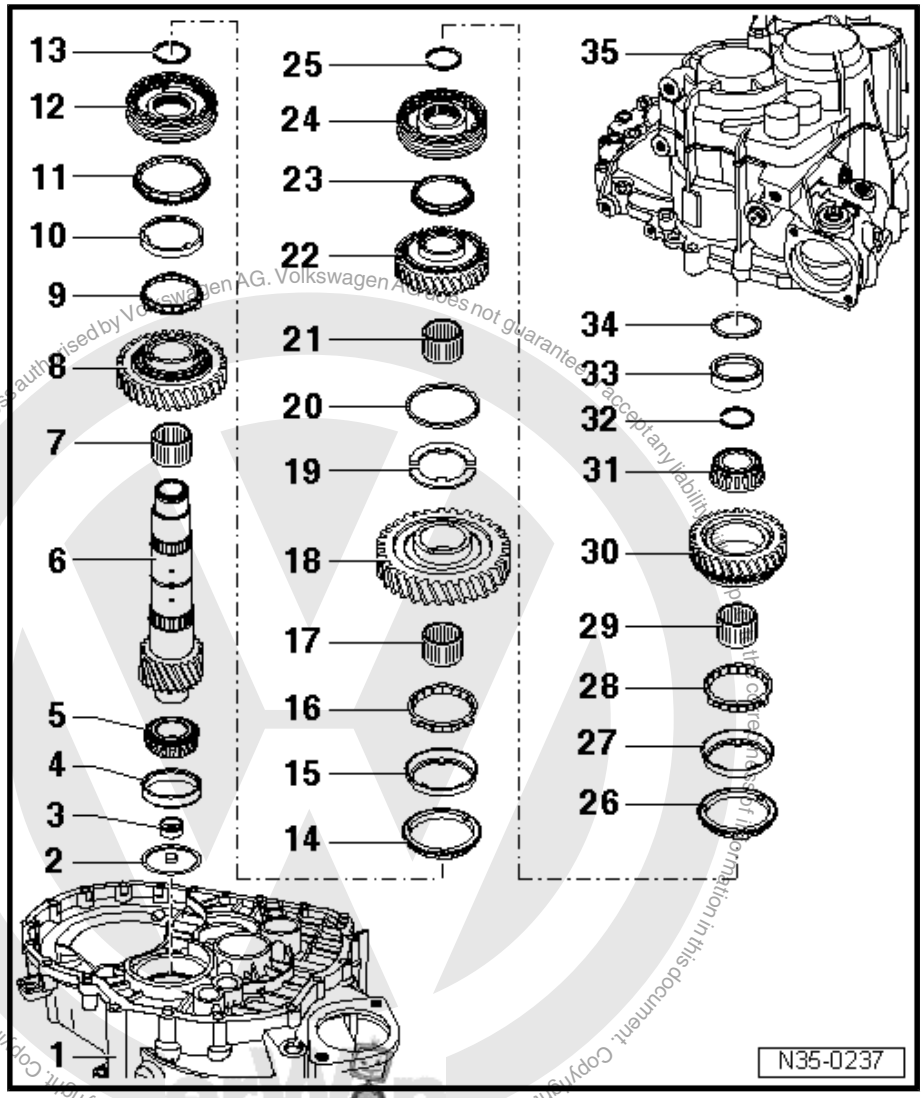

1 - Clutch Housing

2 - Oil Deflector Ring

3 - Dished Washer

- ❑ Removing. Refer to ⇒ Fig. ""Removing the Dished Washer -A- from the Output Shaft"" , page 322 .
- ❑ Installing. Refer to ⇒ Fig. ""Installing the Dished Washer into the Output Shaft"" , page 322 .

4 - Outer Race/Tapered Roller Bearing

- ❑ Removing. Refer to ⇒ Fig. ""Removing the Outer Race / Tapered Roller Bearing from the Clutch Housing"" , page 322 .
- ❑ Installing. Refer to ⇒ Fig. ""Installing the Outer Race/Tapered Roller Bearing in the Clutch Housing"" , page 323 .

5 - Inner Race / Tapered Roller Bearing

- ❑ Removing. Refer to ⇒ Fig. ""Removing the Inner Race/Tapered Roller Bearing on the Side of the Clutch Housing"" , page 322 .
- ❑ Installing. Refer to ⇒ Fig. ""Installing the Inner Race/Tapered Roller Bearing on the Side of the Clutch Housing"" , page 322 .

6 - Output Shaft

- ❑ For 1st through 4th gear
- ❑ Adjusting. Refer to ⇒ "2.3 Output Shaft 1st through 4th Gear, Adjusting", page 340 .

7 - Needle Bearing

- ❑ For 2nd gear

8 - 2nd Gear Wheel

- ❑ 1st/2nd gear synchronizing, from transmission build date 10/26/2009. Refer to ⇒ "2.2.1 Differentiating 1st/2nd Gear Synchronization, Differentiating 3rd Gear Synchronization", page 325 .

9 - Synchronizer Ring (Inner Race for 2nd Gear)

- ❑ 1st/2nd gear synchronizing, from transmission build date 10/26/2009. Refer to ⇒ "2.2.1 Differentiating 1st/2nd Gear Synchronization, Differentiating 3rd Gear Synchronization", page 325 .

10 - 2nd Gear Outer Race

- ❑ 1st/2nd gear synchronizing, from transmission build date 10/26/2009. Refer to ⇒ "2.2.1 Differentiating 1st/2nd Gear Synchronization, Differentiating 3rd Gear Synchronization", page 325 .

11 - 2nd Gear Synchronizer Ring

- ❑ 1st/2nd gear synchronizing, from transmission build date 10/26/2009. Refer to ⇒ "2.2.1 Differentiating 1st/2nd Gear Synchronization, Differentiating 3rd Gear Synchronization", page 325 .

12 - Locking Collar with Synchronizer Hub for 1st and 2nd Gears

- ❑ After removing circlip -item 13- ⇒ Item 13 (page 319) , remove the 2nd gear wheel. Refer to ⇒ Fig. ""Removing the Locking Collar and the Synchronizer Hub for 1st and 2nd Gear"" , page 324
- ❑ Disassembling. Refer to ⇒ Fig. ""Disassembling and Assembling the Locking Collar and the Synchronizer Hub for 1st, 2nd, 3rd and 4th Gears"" , page 327 .
- ❑ Assembling locking collar/synchronizer hub. Refer to ⇒ Fig. ""Disassembling and Assembling the Locking Collar and the Synchronizer Hub for 1st, 2nd, 3rd and 4th Gears"" , page 327
- ❑ 1st/2nd gear synchronizing, from transmission build date 10/26/2009. Refer to ⇒ "2.2.1 Differentiating 1st/2nd Gear Synchronization, Differentiating 3rd Gear Synchronization", page 325 .

13 - Circlip

14 - 1st Gear Synchronizer Ring

- ❑ 1st/2nd gear synchronizing, from transmission build date 10/26/2009. Refer to ⇒ "2.2.1 Differentiating 1st/2nd Gear Synchronization, Differentiating 3rd Gear Synchronization", page 325 .

15 - 1st Gear Outer Race

- ❑ 1st/2nd gear synchronizing, from transmission build date 10/26/2009. Refer to ⇒ "2.2.1 Differentiating 1st/2nd Gear Synchronization, Differentiating 3rd Gear Synchronization", page 325 .

16 - Synchronizer Ring for 1st Gear

- ❑ 1st/2nd gear synchronizing, from transmission build date 10/26/2009. Refer to ⇒ "2.2.1 Differentiating 1st/2nd Gear Synchronization, Differentiating 3rd Gear Synchronization", page 325 .

17 - Needle Bearing

- ❑ For 1st gear

18 - 1st Gear Wheel

- ❑ 1st/2nd gear synchronizing, from transmission build date 10/26/2009. Refer to ⇒ "2.2.1 Differentiating 1st/2nd Gear Synchronization, Differentiating 3rd Gear Synchronization", page 325 .

19 - Thrust Washer

- ❑ For 1st and 4th gears
- ❑ Quantity: 2
- ❑ The tab on the thrust washer must fit into the hole in the output shaft.

20 - Washer

- ❑ Holds the thrust washers -item 19- ⇒ Item 19 (page 319) in place on the output shaft

21 - Needle Bearing

- ❑ For 4th gear

22 - 4th Gear Wheel

23 - 4th Gear Synchronizer Ring

- ❑ Brass or steel
- ❑ Checking for wear. Refer to ⇒ Fig. ""Checking the 4th Gear Synchronizer Ring for Wear"" , page 329

24 - Locking Collar with Synchronizer Hub for 3rd and 4th Gears

- ❑ After removing locking ring -item 25- ⇒ Item 25 (page 320) , remove the 4th gear wheel. Refer to ⇒ Fig. ""Removing the 3rd and 4th Gear Synchronizer Hub/Locking Collar with the 4th gear Wheel"" , page 324

Protected by copyright. Copying for private or commercial purposes, in part or in whole, is not permitted unless authorized by Volkswagen AG. Volkswagen AG does not guarantee or accept any liability with respect to the correctness of information in this document. Copyright by Volkswagen AG.

- Disassembling. Refer to
  ⇒ Fig. ""Disassembling and Assembling the Locking Collar and the Synchronizer Hub for 1st, 2nd, 3rd and 4th Gears"" , page 327 .
- Installed position: locking collar/synchronizer hub. Refer to
  ⇒ Fig. ""Installed Position: Locking Collar/Synchronizer Hub for 3rd and 4th Gears"" , page 329
- Assembling the locking collar/synchronizer hub. Refer to
  ⇒ Fig. ""Disassembling and Assembling the Locking Collar and the Synchronizer Hub for 1st, 2nd, 3rd and 4th Gears"" , page 327 and
  ⇒ Fig. ""Assembling the Locking Collar/Synchronizer Hub for 1st, 2nd, 3rd and 4th Gears"" , page 327
- Installing. Refer to
  ⇒ Fig. ""Installing the Synchronizer Hub with Locking Collar for 3rd and 4th Gears"" , page 329 .

25 - Circlip

26 - 3rd Gear Synchronizer Ring

- Modified 3rd gear synchronizing from transmission manufacture date 5/25/2000, differentiation. Refer to
  ⇒ "2.2.1 Differentiating 1st/2nd Gear Synchronization, Differentiating 3rd Gear Synchronization", page 325 .

27 - 3rd Gear Outer Race

- Modified 3rd gear synchronizing from transmission manufacture date 5/25/2000, differentiation. Refer to
  ⇒ "2.2.1 Differentiating 1st/2nd Gear Synchronization, Differentiating 3rd Gear Synchronization", page 325 .

28 - Synchronizer Ring for 3rd Gear

- Modified 3rd gear synchronizing from transmission manufacture date 5/25/2000, differentiation. Refer to
  ⇒ "2.2.1 Differentiating 1st/2nd Gear Synchronization, Differentiating 3rd Gear Synchronization", page 325 .

29 - Needle Bearing

- For 3rd gear

30 - 3rd Gear Wheel

- Modified 3rd gear synchronizing from transmission manufacture date 5/25/2000, differentiation. Refer to
  ⇒ "2.2.1 Differentiating 1st/2nd Gear Synchronization, Differentiating 3rd Gear Synchronization", page 325 .

31 - Inner Race / Tapered Roller Bearing

- Removing. Refer to
  ⇒ Fig. ""Remove the Inner Race/Tapered Roller Bearing on the Side of the Transmission Housing"" , page 323
- Installing. Refer to
  ⇒ Fig. ""Installing the Inner Race/Tapered Roller Bearing on the Side of the Transmission Housing"" , page 323 .

32 - Circlip

- Select the correct one when replacing the tapered roller bearing -item 31- ⇒ Item 31 (page 320) and the output shaft -item 6- ⇒ Item 6 (page 318) . Refer to ⇒ Fig. ""Selecting The Locking Ring"" , page 323

33 - Outer Race/Tapered Roller Bearing

- Removing. Refer to
  ⇒ Fig. ""Removing the Outer Race/Tapered Roller Bearing from the Transmission Housing"" , page 324 .
- Installing. Refer to
  ⇒ Fig. ""Installing the Outer Race/Tapered Roller Bearing into the Transmission Housing."" , page 324 .

34 - Shim

- Selecting thickness. Refer to ⇒ "2.3 Output Shaft 1st through 4th Gear, Adjusting", page 340 .

35 - Transmission Housing

2.2 Output Shaft, 1st to 4th Gears, Disassembling and Assembling

⇒ "2.2.1 Differentiating 1st/2nd Gear Synchronization, Differentiating 3rd Gear Synchronization", page 325 .

⇒ "2.2.1 Differentiating 1st/2nd Gear Synchronization, Differentiating 3rd Gear Synchronization", page 325

⇒ "2.2.3 Output Shaft for 1st through 4th Gears, Assembling - from Transmission Manufacture Date 10/26/09 through Transmission Manufacture Date 5/24/00", page 330

⇒ "2.2.4 Output Shaft for 1st through 4th gears, Assembling - from Transmission Manufacture Date 5/25/00", page 335

Special tools and workshop equipment required

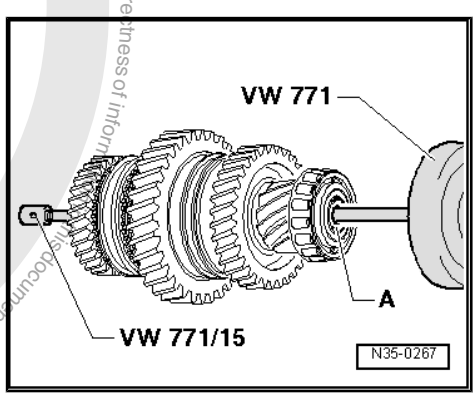

- Press Plate - VW401-
- Press Plate - VW402-
- Press Piece - Rod - VW407-
- Press Piece - Rod - VW408A-
- Press Piece - Multiple Use - VW412-
- Press Piece - 60mm - VW415A-
- Holding Plate - VW309A-
- Holding Fixture - VW313-
- Transmission Support - VW353-
- Press Piece - Multiple Use - VW431-
- Press Piece - Multiple Use - VW433-
- Press Piece - Multiple Use - VW454-
- Press Piece - Multiple Use - VW512-
- Press Piece - 42mm - VW516-
- Press Piece - Multiple Use - VW519-
- Slide Hammer Set - Hammer - VW771-
- Crankshaft Holding Fixture - VW801-
- Press Piece - Multiple Use - 40-105-
- Bearing Installer - Multiple Use - 40-20-
- Bearing Installer - Differential Bearing - 40-21-
- Slide Hammer - Press Plate - 2050-
- Holding Fixture - Spacers - VW540/1B-
- Puller - Taper Roller Bearing - VAG1582-
- Puller - Taper Roller Bearing - Adapter 7 - VAG1582/7-
- Inductive Heater - VAS6414-
- Puller - Kukko Internal - 46-56mm - 21/7-
- Puller - Kukko Internal - 56-70mm - 21/8-
- Puller - Kukko Puller - 60-200mm Width, 250mm Length - 18/2-
- Puller - Kukko Quick Action Separating Tool - 22-115mm - 17/2-
- Puller - Kukko Counterstay - 22/2-

Protected by copyright. Copying for private or commercial purposes, in part or in whole, is not permitted unless authorised by Volkswagen AG. Volkswagen AG does not guarantee or accept any liability with respect to the correctness of information in this document. Copyright by Volkswagen AG.

Removing the Dished Washer -A- from the Output Shaft

Installing the Dished Washer into the Output Shaft

Dimension “a” = 2 mm

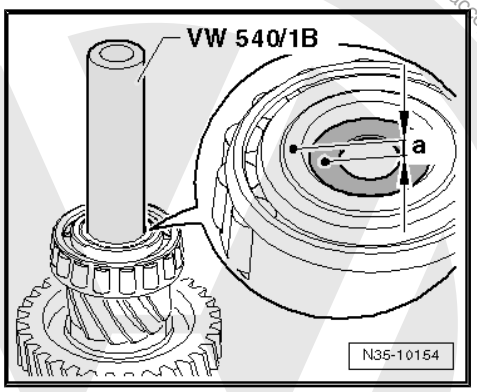

Removing the Inner Race/Tapered Roller Bearing on the Side of the Clutch Housing

A - 22 to 115 mm Separating Tool , for example Puller - Kukko Quick Action Separating Tool - 22-115mm - 17/2-

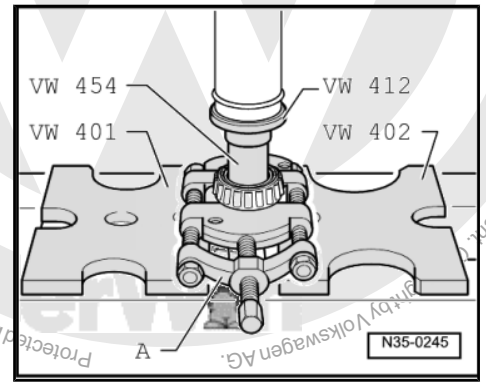

Installing the Inner Race/Tapered Roller Bearing on the Side of the Clutch Housing

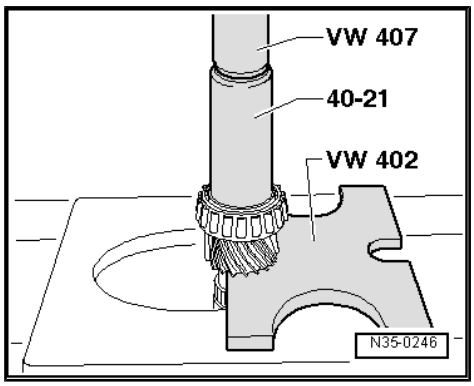

Removing the Outer Race / Tapered Roller Bearing from the Clutch Housing

A - Counter Support , for example, Puller - Kukko Counterstay - 22/2-

B - Internal Puller 56 to 70 mm , for example, Puller - Kukko Internal - 56-70mm - 21/8-

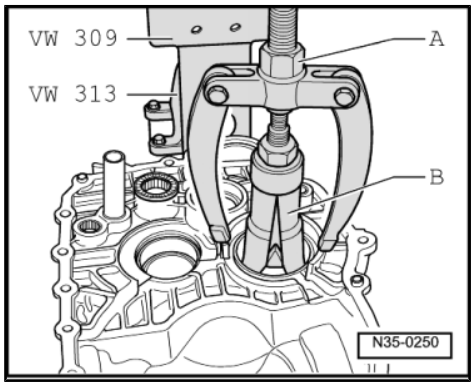

Installing the Outer Race/Tapered Roller Bearing in the Clutch Housing

– Support the clutch housing with the Bearing Installer - Multiple Use - 40-20- directly under the bearing mount.

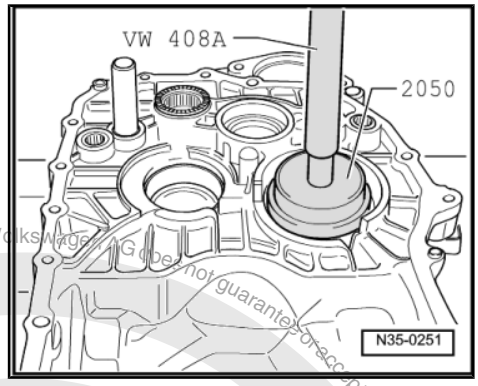

Remove the Inner Race/Tapered Roller Bearing on the Side of the Transmission Housing

Before installing the Tapered Roller Bearing Puller :

– Remove the inner race/tapered roller bearing locking ring on the side facing the transmission housing.

– Place the Press Piece - Multiple Use - VW431- in the output shaft and place the Press Piece - Multiple Use - 40-105- on top.

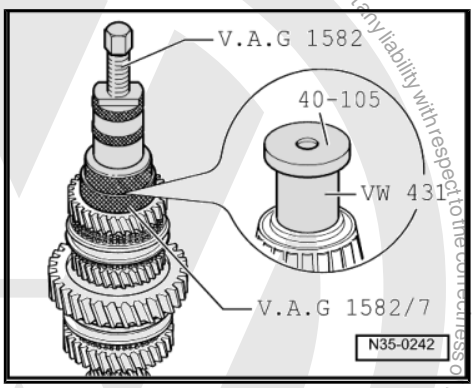

Installing the Inner Race/Tapered Roller Bearing on the Side of the Transmission Housing

– Choose the correct locking ring. Refer to ⇒ Fig. ""Selecting The Locking Ring"" , page 323 and install.

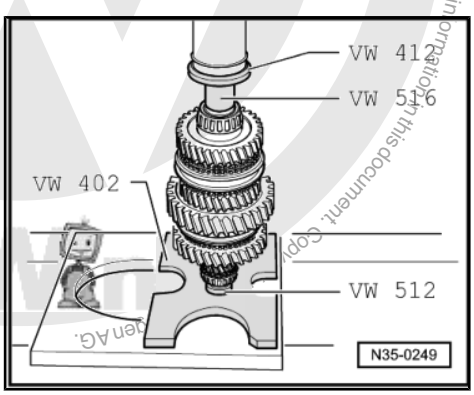

Selecting The Locking Ring

– Choose and install the thickest locking ring that will fit.

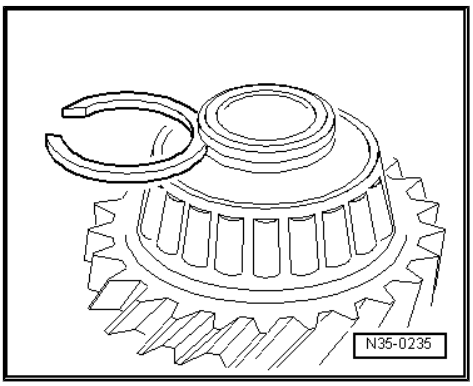

Note

Allocate the circlips. Refer to the Parts Catalog.

The following locking rings are available:

Thickness (mm)			
1.79	1.83	1.86	1.89
1.92	1.95	1.98	

Protected by copyright. Copying for private or commercial purposes, in part or in whole, is not permitted unless authorised by Volkswagen AG. Volkswagen AG does not guarantee or accept any liability with respect to the correctness of information in this document. Copyright by Volkswagen AG.

Removing the Outer Race/Tapered Roller Bearing from the Transmission Housing

A - Counter Support , for example, Puller - Kukko Counterstay - 22/2-

B - Internal Puller 46 to 58 mm , for example, Puller - Kukko Internal - 46-56mm - 21/7-

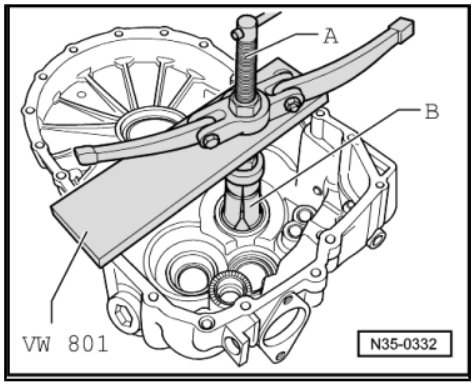

Installing the Outer Race/Tapered Roller Bearing into the Transmission Housing.

– Install the adjusting shim under the outer race.

– Support the transmission housing under the bearing mount using the Slide Hammer - Press Plate - 2050- .

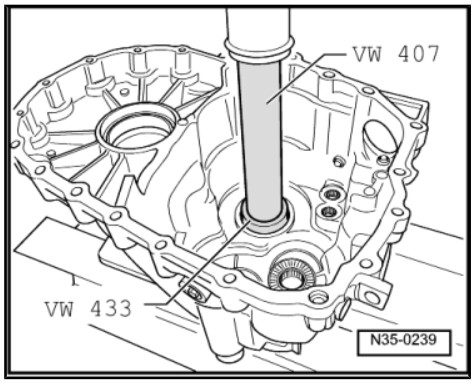

Disassembling the Output Shaft

Note

Remove the inner race/tapered roller bearing on the side of the transmission housing. Refer to
⇒ Fig. ""Remove the Inner Race/Tapered Roller Bearing on the Side of the Transmission Housing"", page 323 .

Removing the 3rd and 4th Gear Synchronizer Hub/Locking Collar with the 4th gear Wheel

– Remove the locking ring beforehand.

A - Puller , for example, Puller - Kukko Puller - 60-200mm Width, 250mm Length - 18/2-

B - 22 to 115 mm Separating Tool , for example Puller - Kukko Quick Action Separating Tool - 22-115mm - 17/2-

– Remove the thrust washers for 1st and 4th gears -item 19- ⇒ Item 19 (page 319) and -item 20- ⇒ Item 20 (page 319) .

– Remove the 1st gear wheel -item 18- ⇒ Item 18 (page 319) .

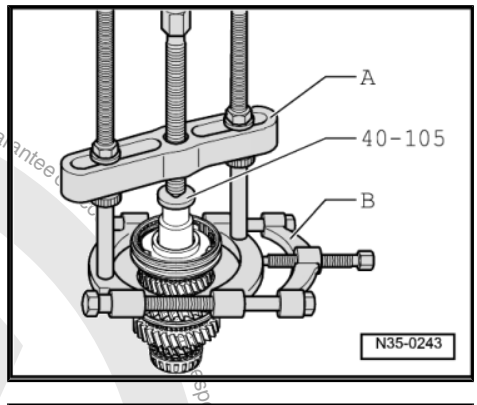

Removing the Locking Collar and the Synchronizer Hub for 1st and 2nd Gear

After removing the circlip, press off the gear wheel for 2nd gear and locking collar/synchronizer hub together.

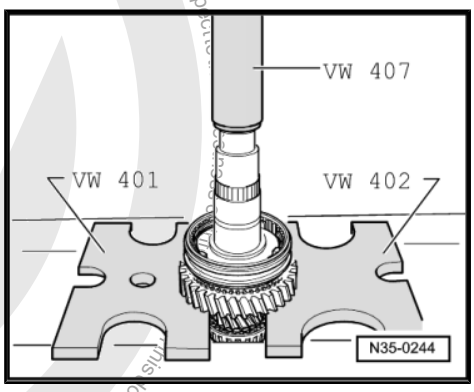

Protected by copyright. Copying for private or commercial purposes, in part or in whole, is not permitted unless authorised by Volkswagen AG. Volkswagen AG does not guarantee the accuracy and completeness of this document. Copyright by Volkswagen AG.

2.2.1 Differentiating 1st/2nd Gear Synchronization, Differentiating 3rd Gear Synchronization

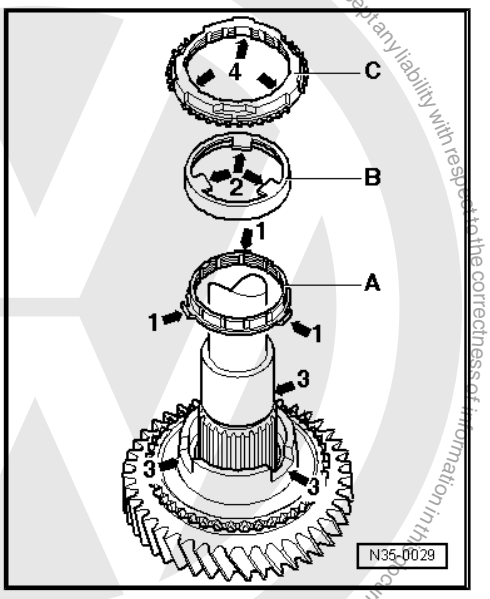

1st/2nd Gear Synchronization through Transmission Manufacture Date 10/25/2009 and 3rd Gear Synchronization through Transmission Manufacture date 5/24/2000

The Synchronizer Ring -C- and Inner Ring -A- are Made of Brass. The Outer Ring -B- is Made of Steel.	Transmission Manufacture Date	Assembling the Output Shaft, 1st to 4th Gears
1st/2nd gear synchronization	Through 10/25/09	Refer to ⇒ "2.2.2 Output Shaft for 1st through 4th Gears, Assembling, through Transmission Production Date 10/25/2009", page 326
3rd gear synchronization	Through 5/24/2000	Refer to ⇒ "2.2.3 Output Shaft for 1st through 4th Gears, Assembling - from Transmission Manufacture Date 10/26/09 through Transmission Manufacture Date 5/24/00", page 330

Volkswagen AG does not guarantee or accept any liability with respect to the correctness of information in this document. Copyright by Volkswagen AG. Protected by copyright. Copying for private or commercial purposes, in part or in whole, is not permitted unless authorized by Volkswagen AG.

1st/2nd Gear Synchronization from Transmission Manufacture Date 10/26/2009 and 3rd Gear Synchronization from Transmission Manufacture Date 5/25/2000

The Synchronizer Ring -C-, the Outer Ring -B- and the Inner Ring -A- are Made of Steel.	Transmission Manufacture Date	Assembling the Output Shaft, 1st to 4th Gears
1st/2nd gear synchronization	From 10/26/2009	Refer to ⇒ "2.2.3 Output Shaft for 1st through 4th Gears, Assembling - from Transmission Manufacture Date 10/26/09 through Transmission Manufacture Date 5/24/00", page 330 or ⇒ "2.2.4 Output Shaft for 1st through 4th gears, Assembling - from Transmission Manufacture Date 5/25/00", page 335 .
3rd gear synchronization	From 5/25/2000	Refer to ⇒ "2.2.4 Output Shaft for 1st through 4th gears, Assembling - from Transmission Manufacture Date 5/25/00", page 335

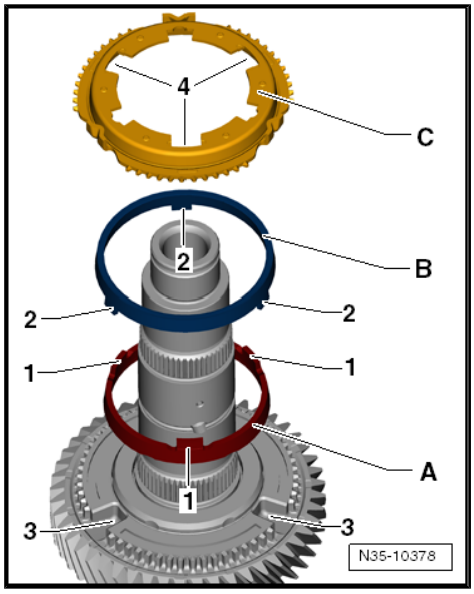

2.2.2 Output Shaft for 1st through 4th Gears, Assembling, through Transmission Production Date 10/25/2009

Checking the Inner Race for 1st, 2nd and 3rd Gear for Wear

– Check the tabs on the inner race for scoring.

– Install the inner race onto taper of selector gear and then measure gap dimension -a- with a feeler gauge.

Gap Dimension -a-	Installation Dimension	Wear Limit
1st 2nd and 3rd gear	0.75 to 1.25 mm	0.3 mm

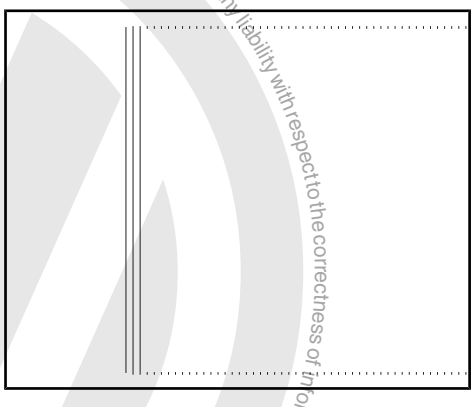

Protected by copyright. Copying for private or commercial purposes, in part or in whole, is not permitted unless authorised by Volkswagen AG. Volkswagen AG does not guarantee or accept any liability with respect to the correctness of information in this document. Copyright by Volkswagen AG.

Protected by copyright. Copying for private or commercial purposes in part or in whole, is not permitted unless authorised by Volkswagen AG. Volkswagen AG does not guarantee or accept any liability with respect to the correctness of information.
Copyright by Volkswagen AG.

Checking the 1st, 2nd and 3rd Gear Synchronizer Rings for Wear

– Install the synchronizer ring, outer race and inner race onto taper of selector gear and then measure the gap dimension -a- with a feeler gauge.

Gap Dimension -a-	Installation Dimension	Wear Limit
1st 2nd and 3rd gear	1.2 to 1.8 mm	0.5 mm

– Install the 2nd gear wheel with the needle bearing.

Installed Position: 2nd Gear Outer Race, Inner Race and Synchronizer Ring

– Check the tabs -arrows 1 and arrows 2- for scoring.

– Replace the inner race, the outer race and the synchronizer ring if they have grooves or scoring.

– Install the inner race -A- on the 2nd gear wheel.

The angled tabs -arrows 1- face the outer race -B-.

– Install the outer race -B-.

The tabs -arrows 2- must lock into the retainers -arrows 3- in the gear wheel.

– Install the synchronizer ring -C-.

The retainers -arrows 4- lock in the tabs -arrows 1- on the inner race -A-.

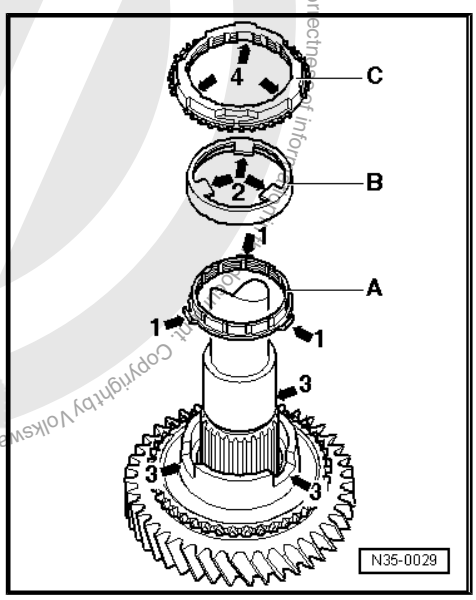

Disassembling and Assembling the Locking Collar and the Synchronizer Hub for 1st, 2nd, 3rd and 4th Gears

1 - Spring

2 - Locking piece

3 - Locking collar

4 - Synchronizer hub

– Slide the locking collar over the synchronizer hub.

In 3rd and 4th gear, the wide collar on the synchronizer hub and the locking collar face in one direction.

The notches for the locking pieces on the synchronizer hub and locking collar must line up with each other.

Assembling the Locking Collar/Synchronizer Hub for 1st, 2nd, 3rd and 4th Gears

The locking collar is pushed over the synchronizer hub.

– Install the locking pieces and springs offset by 120°. The angled end of the spring must engage into the hollow locking piece.

Installation Position of Locking Collar/Synchronizer Hub for 1st and 2nd Gears

The identification groove -arrow 1- and the narrow collar -arrow 2- on the synchronizer hub face the 1st gear.

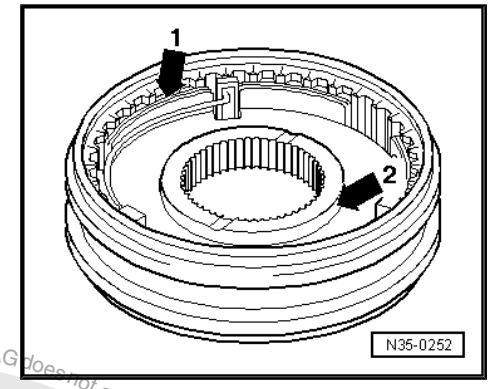

Installing the Locking Collar/Synchronizer Hub for 1st and 2nd Gears.

Turn the synchronizer ring so that the grooves line up with the locking pieces.

– Install the locking ring.

Install the 1st gear synchronizer ring

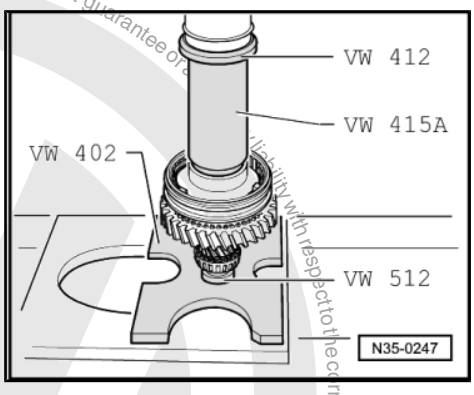

Installation Position of 1st Gear Outer Race

The tabs -arrows- face the synchronizer hub/locking collar -A-.

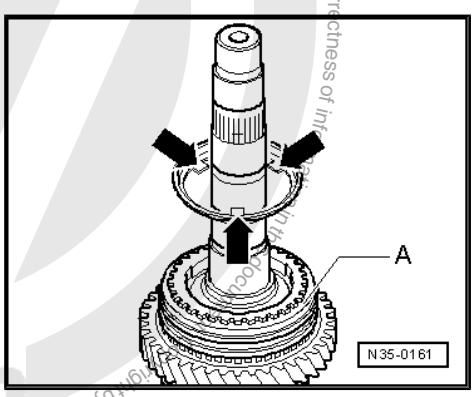

Installed Position: Synchronizer Ring -A- (1st gear inner race)

The tabs -arrows 1- engage into the holes -arrows 2- inside the synchronizer ring -B-.

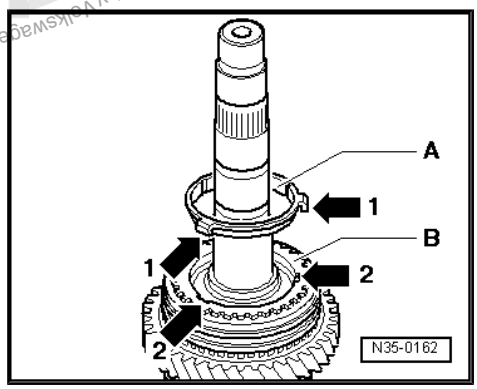

Protected by copyright. Copyright for private or commercial purposes, in part or in whole, is not permitted unless authorised by Volkswagen AG. Volkswagen AG does not guarantee or assume any liability with respect to the correctness of information in this document. Copyright by Volkswagen AG.

Installing 1st Gear Wheel with Needle Bearing

The higher collar -A- faces 2nd gear -B-. The notches in the collar -arrow- lock into the tabs on the outer race. Refer to ⇒ Fig. ""Installation Position of 1st Gear Outer Race"" , page 328 .

– Install the thrust washers for 1st and 4th gears -item 19- ⇒ Item 19 (page 319) and -item 20- ⇒ Item 20 (page 319) .

– Install the 4th gear wheel with needle bearing.

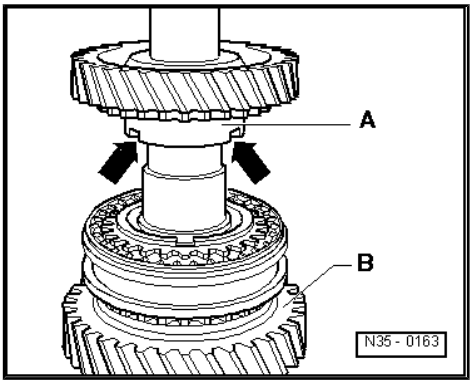

Checking the 4th Gear Synchronizer Ring for Wear

– Press synchronizer ring onto taper of the gear wheel and measure gap dimension -a- using a feeler gauge.

Gap dimension -a-	Installation Dimension	Wear Limit
4th Gear	1.0 to 1.7 mm	0.5 mm

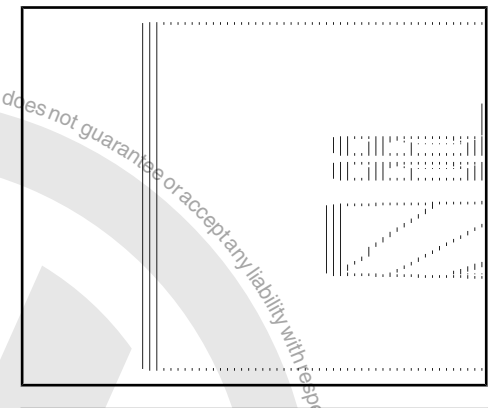

Installed Position: Locking Collar/Synchronizer Hub for 3rd and 4th Gears

The wider collar on the synchronizer hub -arrow- faces the 3rd gear.

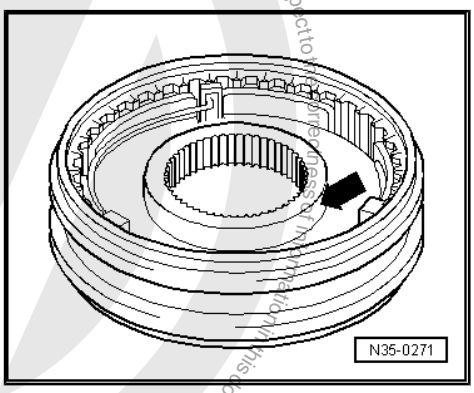

Installing the Synchronizer Hub with Locking Collar for 3rd and 4th Gears

– Turn the synchronizer ring so that the grooves line up with the locking pieces.

– Install the locking ring.

– Install the 3rd gear synchronizer ring on the synchronizer hub/ locking collar for 3rd and 4th gears.

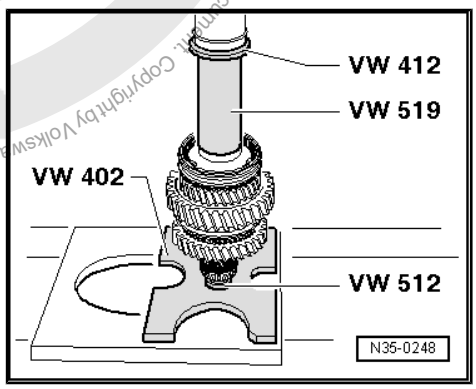

Protected by copyright. Copyright by Volkswagen AG. Volkswagen AG does not guarantee or accept any liability with respect to the correctness of information in this document. Copying for private or commercial purposes, in part or in whole, is not permitted unless authorised by Volkswagen AG.

Installed Position: 3rd Gear Outer Race

The tabs -arrows- face the synchronizer hub/locking collar -A-.

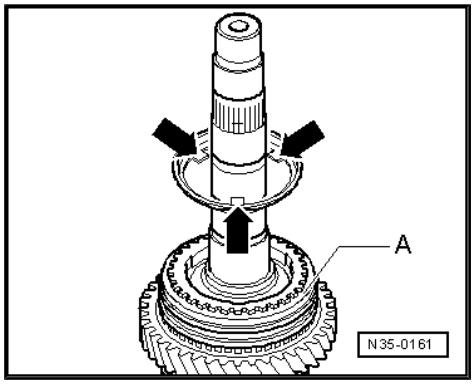

Installed Position: Synchronizer Ring -A- (3rd Gear Inner Race)

The tabs -arrows 1- engage into the holes -arrows 2- inside the synchronizer ring -B-.

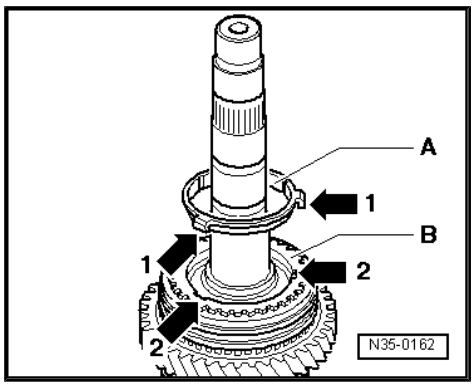

Installed Position: 3rd Gear Wheel

The higher collar -A- faces toward 4th gear -B-. The notches in the collar -arrow- lock into the tabs on the outer race. Refer to ⇒ Fig. ""Installation Position of 1st Gear Outer Race"" , page 328 .

– Install the 3rd gear wheel with the needle bearing.

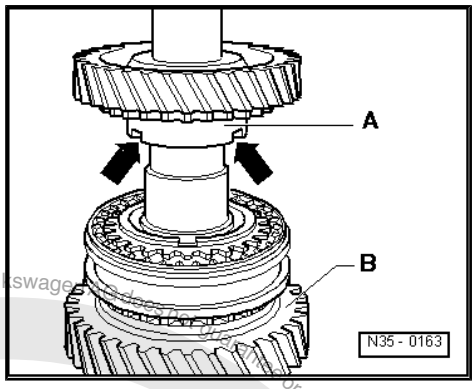

Note

- *Pressing on inner race/tapered roller bearing. Refer to* *⇒ Fig. ""Installing the Inner Race/Tapered Roller Bearing on the Side of the Transmission Housing"" , page 323* .
- *Selecting the locking ring for the inner race/tapered roller bearing. Refer to* *⇒ Fig. ""Selecting The Locking Ring"" , page 323* .

2.2.3 Output Shaft for 1st through 4th Gears, Assembling - from Transmission Manufacture Date 10/26/09 through Transmission Manufacture Date 5/24/00

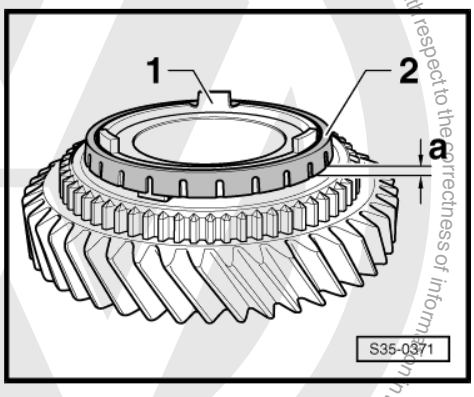

Checking the Inner Contact Surface for Wear on the 1st Gear Outer Race and on the 2nd Gear Outer Race

– Install the inner race -1- on the cone on the gear wheel.

– Install the outer race -2- on the cone on the inner race. Measure the gap -a- with a feeler gauge at 3 locations at 120°.

– Note the average value.

Wear Limit Dimension -a-	
1st gear and 2nd gear	0.4 mm

Protected by copyright. Copyright by Volkswagen AG.

Checking the Outer Contact Surface for Wear on the 1st Gear Outer race and on the 2nd Gear Outer Race

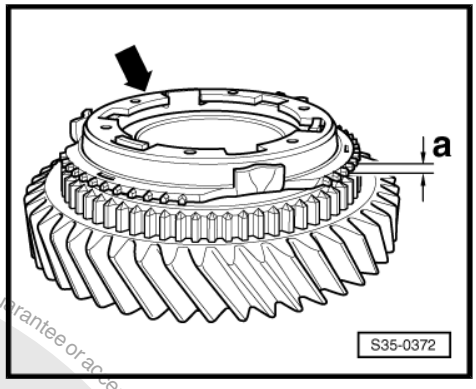

– Check the synchronizer ring -arrow- on the inner running surface for grooves and radial wear, and replace if necessary.

– Install the inner race, the outer race and the synchronizer ring on the cone on the inner race.

– Press on the synchronizer ring with the outer race and turn it evenly so that the synchronizer ring settles in.

– Measure the gap -a- with a feeler gauge at 3 locations at 120°.

– Note the average value.

Wear Limit Dimension -a-	
1st gear and 2nd gear	0.8 mm

– Install the 2nd gear wheel with the needle bearing.

Installing 2nd Gear Outer Race, Inner Race and Synchronizer Ring

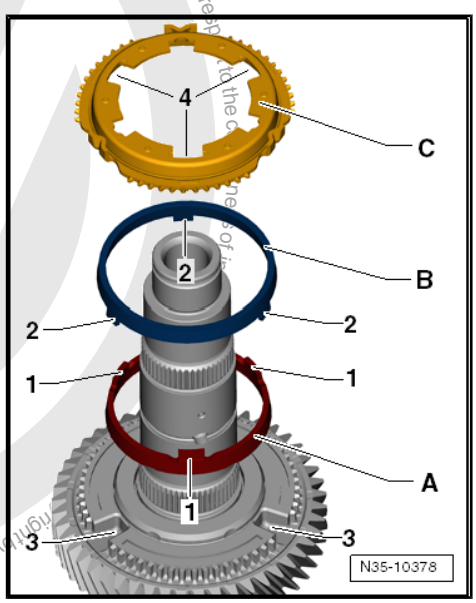

– Install the inner race -A- in the gear wheel.

The tabs -1- face away from the gear wheel.

– Install the outer race -B-.

The tabs -2- engage in grooves -3- on the gear wheel.

– Install the synchronizer ring -C-.

The larger openings -4- lock in the tabs -1- on the inner race -A-.

Disassembling and Assembling the Locking Collar and the Synchronizer Hub for 1st, 2nd, 3rd and 4th Gears

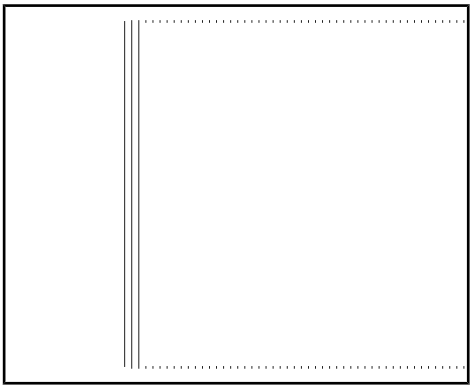

1 - Spring

2 - Locking piece

3 - Locking collar

4 - Synchronizer hub

– Slide the locking collar over the synchronizer hub.

In 3rd and 4th gear, the wide collar on the synchronizer hub and the locking collar face in one direction.

The notches for the locking pieces on the synchronizer hub and locking collar must line up with each other.

Protected by copyright. Copying for private or commercial purposes, in part or in whole, is not permitted unless authorised by Volkswagen AG. Volkswagen AG does not guarantee or accept any liability with respect to the correctness of the information.

Assembling the Locking Collar/Synchronizer Hub for 1st, 2nd, 3rd and 4th Gears

The locking collar is pushed over the synchronizer hub.

– Install the locking pieces and springs offset by 120°. The angled end of the spring must engage into the hollow locking piece.

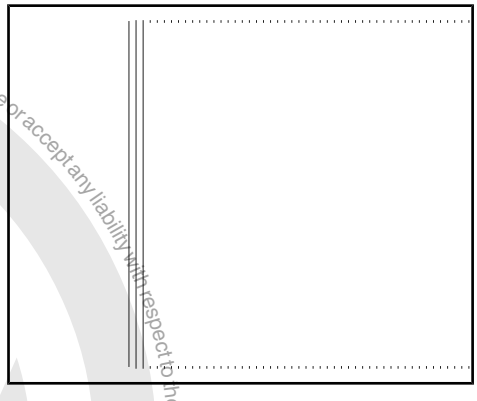

Installation Position of Locking Collar/Synchronizer Hub for 1st and 2nd Gears

The identification groove -arrow 1- and the narrow collar -arrow 2- on the synchronizer hub face the 1st gear.

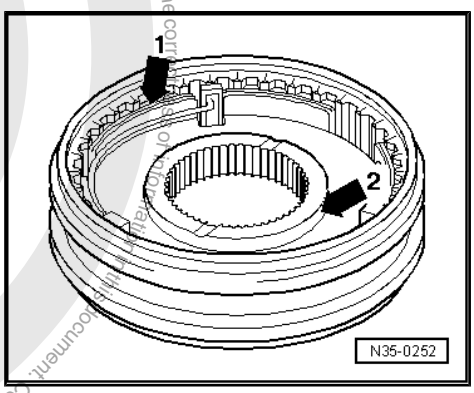

Installing the Locking Collar/Synchronizer Hub for 1st and 2nd Gears.

The pins -A- on the synchronizer ring lock into the recesses -B- in the synchronizer hub.

– Install the locking ring.

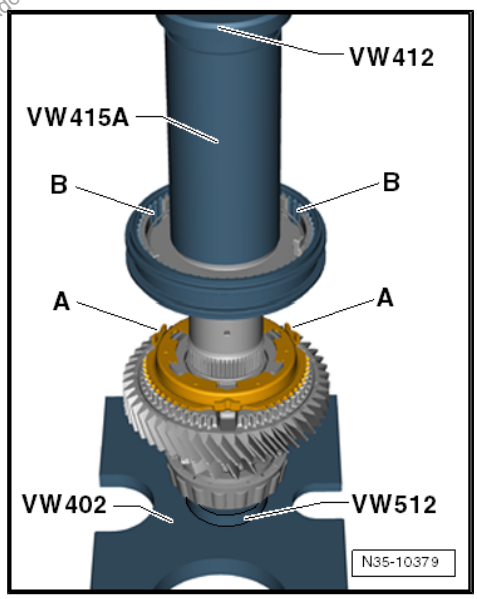

Installing the Synchronizer Ring for 1st Gear Outer race and Inner Race

– Install the synchronizer ring -A- in the synchronizer hub.

The tabs -1- lock in the openings -2- in the synchronizer hub.

– Install the outer race -B- in the synchronizer ring.

The tabs -3- face away from the synchronizer ring.

– Install the inner race -C- in the outer race.

The tabs -4- lock in the larger openings -5- in the synchronizer ring -A-.

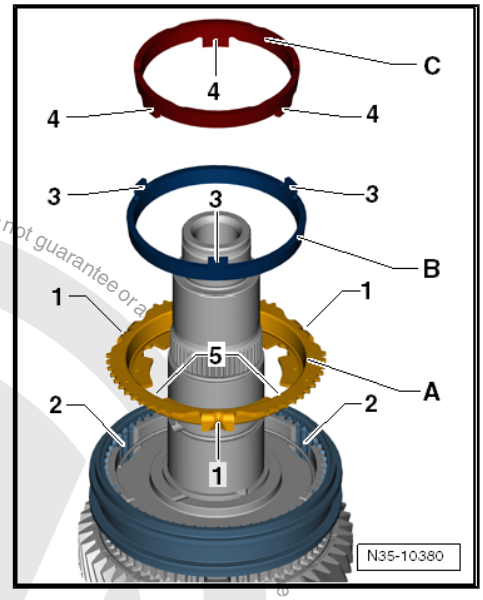

Installing 1st Gear Wheel with Needle Bearing

- The synchronizer ring -1- and the tabs -arrow A- are inside the openings in the synchronizer hub -2-.

The pins -arrows B- in the outer race lock in the recesses -arrows C- in the gear wheel -3-.

– Install the thrust washers for 1st and 4th gears -item 19- ⇒ Item 19 (page 319) and -item 20- ⇒ Item 20 (page 319) .

– Install the 4th gear wheel with needle bearing.

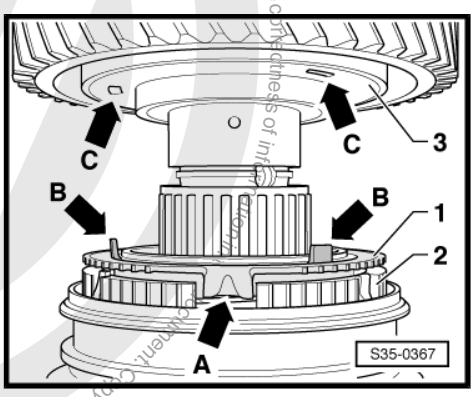

Checking the 4th Gear Synchronizer Ring for Wear

– Press synchronizer ring onto taper of the gear wheel and measure gap dimension -a- using a feeler gauge.

Gap dimension -a-	Installation Dimension	Wear Limit
4th Gear	1.0 to 1.7 mm	0.5 mm

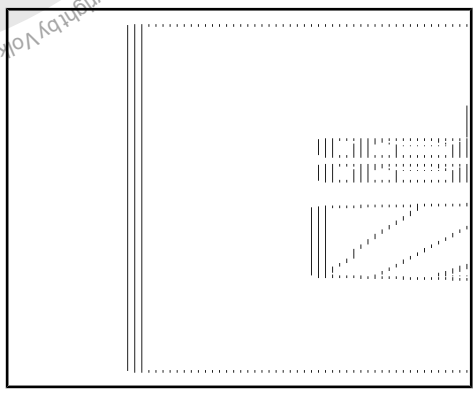

Installed Position: Locking Collar/Synchronizer Hub for 3rd and 4th Gears

The wider collar on the synchronizer hub -arrow- faces the 3rd gear.

– Place the synchronizer ring for 4th gear on the 4th gear wheel.

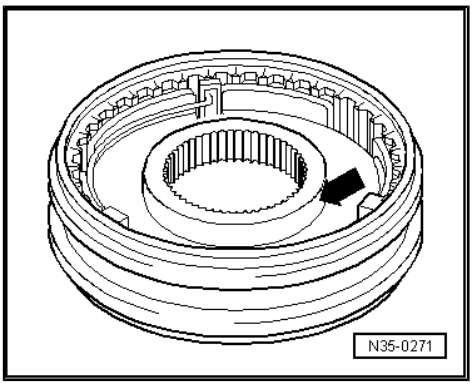

Protected by copyright. Copying for private or commercial purposes, in part or in whole, is not permitted unless authorised by Volkswagen AG. Volkswagen AG does not guarantee or a

Installing the Synchronizer Hub With Locking Collar for 3rd and 4th Gears

– Turn the synchronizer ring so that the grooves line up with the locking pieces.

– Install the locking ring.

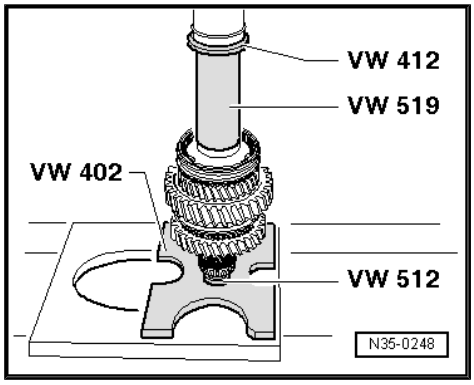

Checking the 3rd Gear Inner Race for Wear

– Install the inner race onto taper of selector gear and then measure gap dimension -a- with a feeler gauge.

Gap dimension -a-	Installation Dimension	Wear Limit
3rd Gear	0.75 to 1.25 mm	0.3 mm

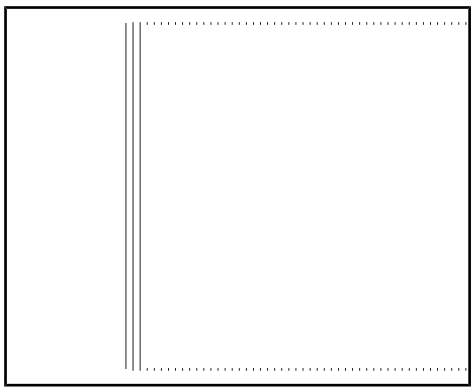

Checking Synchronizer Ring for 3rd Gear for Wear

– Install the synchronizer ring, outer race and inner race onto taper of selector gear and then measure the gap dimension -a- with a feeler gauge.

Gap dimension -a-	Installation Dimension	Wear Limit
3rd Gear	1.2 to 1.8 mm	0.5 mm

– Install the 3rd gear synchronizer ring on the synchronizer hub/ locking collar for 3rd and 4th gears.

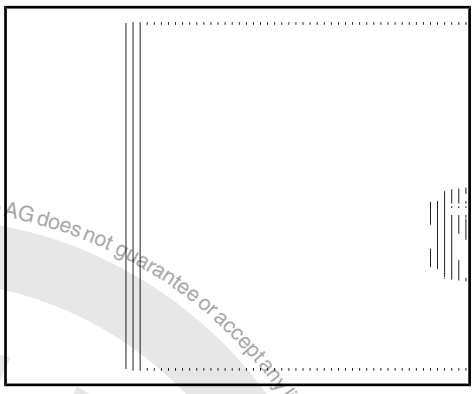

Installed Position: 3rd Gear Outer Race

The tabs -arrows- face the synchronizer hub/locking collar -A-.

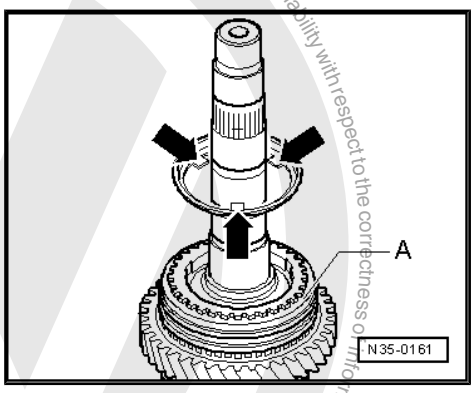

Protected by copyright. Copying for private or commercial purposes, in part or in whole, is not permitted unless authorised by Volkswagen AG. Volkswagen AG does not guarantee or accept any liability with respect to the correctness of information in this document. Copyright by Volkswagen AG.

Installed Position: Synchronizer Ring -A- (3rd Gear Inner Race)

The tabs -arrows 1- engage into the holes -arrows 2- inside the synchronizer ring -B-.

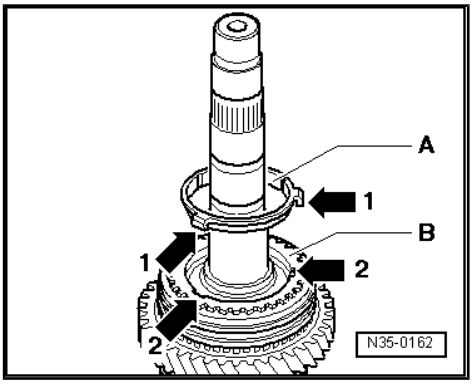

Installed Position: 3rd Gear Wheel

The higher collar -A- faces toward 4th gear -B-. The notches in the collar -arrow- lock into the tabs on the outer race. Refer to ⇒ Fig. ""Installation Position of 1st Gear Outer Race"" , page 328 .

– Install the 3rd gear wheel with the needle bearing.

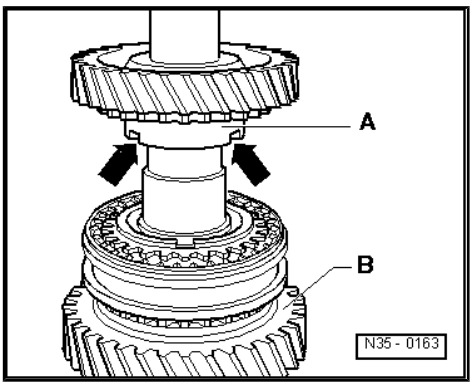

Note

- *Pressing on inner race/tapered roller bearing. Refer to* *⇒ Fig. ""Installing the Inner Race/Tapered Roller Bearing on the Side of the Transmission Housing"" , page 323* .
- *Selecting the locking ring for the inner race/tapered roller bearing. Refer to* *⇒ Fig. ""Selecting The Locking Ring"" , page 323* .

2.2.4 Output Shaft for 1st through 4th gears, Assembling - from Transmission Manufacture Date 5/25/00

Inner Friction Surface on 1st Gear Outer Race, 2nd Gear Outer Race and 3rd Gear Outer Race, Checking for Wear

– Install the inner race -1- on the cone on the gear wheel.

– Install the outer race -2- on the cone on the inner race. Measure the gap -a- with a feeler gauge at 3 locations at 120°.

– Note the average value.

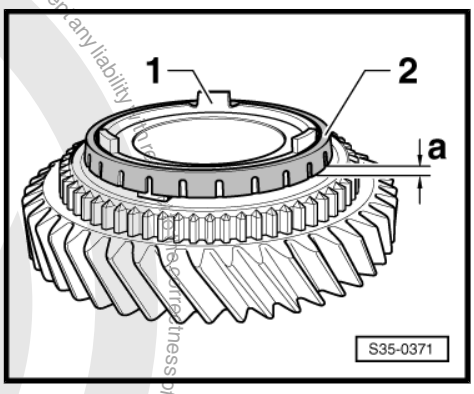

Wear Limit Dimension -a-	
1st gear, 2nd gear, and 3rd gear	0.4 mm

Protected by copyright. Copying for private or commercial purposes, in part or in whole, is not permitted unless authorised by Volkswagen AG. Volkswagen AG does not guarantee or accept any liability with respect to the correctness of information in this document. Copyright by Volkswagen AG.

Outer Friction Surface on 1st Gear Outer Race, 2nd Gear Outer Race and 3rd Gear Outer Race, Checking for Wear

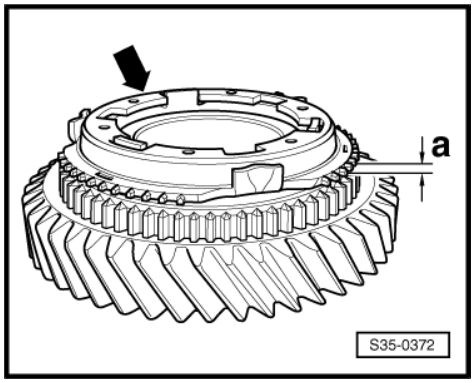

– Check the synchronizer ring -arrow- on the inner running surface for grooves and radial wear, and replace if necessary.

– Install the inner race, the outer race and the synchronizer ring on the cone on the inner race.

– Press on the synchronizer ring with the outer race and turn it evenly so that the synchronizer ring settles in.

– Measure the gap -a- with a feeler gauge at 3 locations at 120°.

– Note the average value.

Wear Limit Dimension -a-	
1st gear, 2nd gear, and 3rd gear	0.8 mm

– Install the 2nd gear wheel with the needle bearing.

Installing 2nd Gear Outer Race, Inner Race and Synchronizer Ring

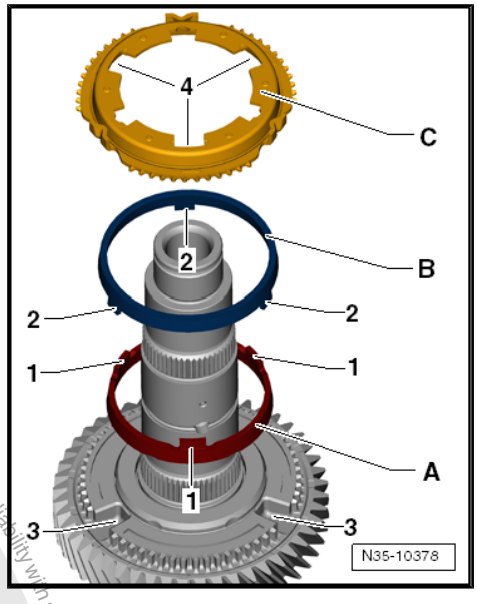

– Install the inner race -A- in the gear wheel.

The tabs -1- face away from the gear wheel.

– Install the outer race -B-.

The tabs -2- engage in grooves -3- on the gear wheel.

– Install the synchronizer ring -C-.

The larger openings -4- lock in the tabs -1- on the inner race -A-.

Disassembling and Assembling the Locking Collar and the Synchronizer Hub for 1st, 2nd, 3rd and 4th Gears

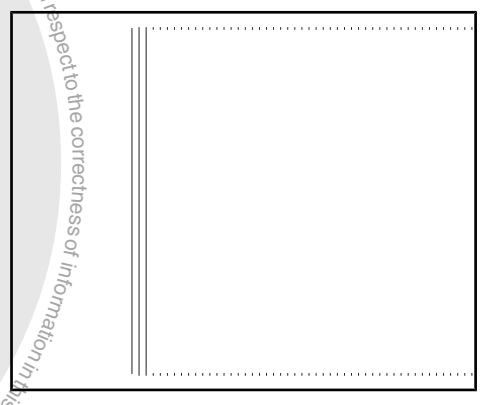

1 - Spring

2 - Locking piece

3 - Locking collar

4 - Synchronizer hub

– Slide the locking collar over the synchronizer hub.

In 3rd and 4th gear, the wide collar on the synchronizer hub and the locking collar face in one direction.

The notches for the locking pieces on the synchronizer hub and locking collar must line up with each other.

Protected by copyright. Copying for private or commercial purposes, in part or in whole, is not permitted unless authorised by Volkswagen AG. Volkswagen AG does not guarantee or accept any liability with respect to the correctness of information in this document. Copyright by Volkswagen AG.

Assembling the Locking Collar/Synchronizer Hub for 1st, 2nd, 3rd and 4th Gears

The locking collar is pushed over the synchronizer hub.

– Install the locking pieces and springs offset by 120°. The angled end of the spring must engage into the hollow locking piece.

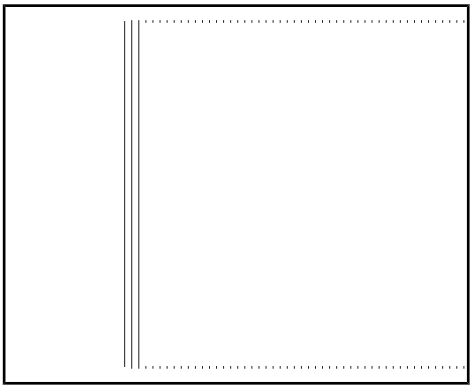

Installation Position of Locking Collar/Synchronizer Hub for 1st and 2nd Gears

The identification groove -arrow 1- and the narrow collar -arrow 2- on the synchronizer hub face the 1st gear.

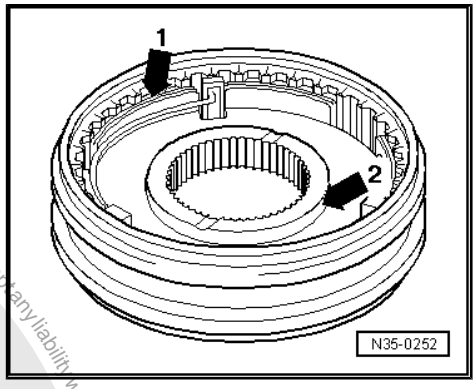

Installing the Locking Collar/Synchronizer Hub for 1st and 2nd Gears.

The pins -A- on the synchronizer ring lock into the recesses -B- in the synchronizer hub.

– Install the locking ring.

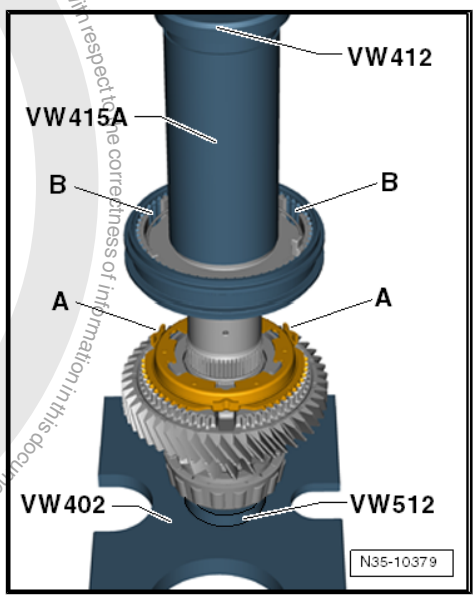

Protected by copyright. Copying for private or commercial purposes, in any form or by any means is not permitted unless authorised by Volkswagen AG. Volkswagen AG does not guarantee or accept any liability with respect to the correctness of information in this document. Copyright by Volkswagen AG.

Installing the Synchronizer Ring for 1st Gear Outer Race and Inner Race

– Install the synchronizer ring -A- in the synchronizer hub.

The tabs -1- lock in the openings -2- in the synchronizer hub.

– Install the outer race -B- in the synchronizer ring.

The tabs -3- face away from the synchronizer ring.

– Install the inner race -C- in the outer race.

The tabs -4- lock in the larger openings -5- in the synchronizer ring -A-.

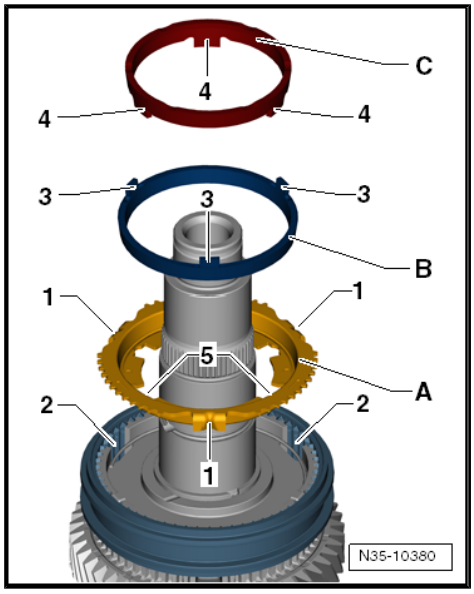

Installing 1st Gear Wheel with Needle Bearing

- The synchronizer ring -1- and the tabs -arrow A- are inside the openings in the synchronizer hub -2-.

The pins -arrows B- in the outer race lock in the recesses -arrows C- in the gear wheel -3-.

– Install the thrust washers for 1st and 4th gears -item 19- ⇒ Item 19 (page 319) and -item 20- ⇒ Item 20 (page 319) .

– Install the 4th gear wheel with needle bearing.

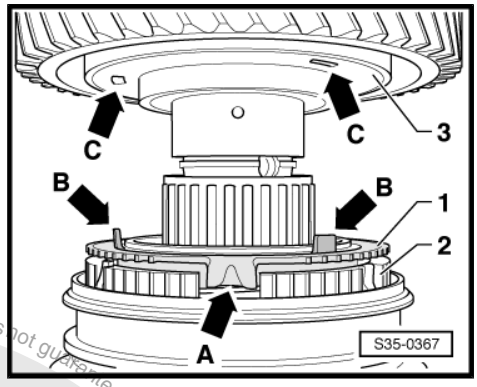

Checking the 4th Gear Synchronizer Ring for Wear

-A- = Brass Synchronizer Ring		
Gap Dimension -a-	**Installation Dimension**	**Wear Limit**
4th Gear	1.0 to 1.7 mm	0.5 mm

-B- = Steel Synchronizer Ring		
Gap Dimension -a-	**Installation Dimension**	**Wear Limit**
4th Gear	1.3 to 2.4 mm	0.8 mm

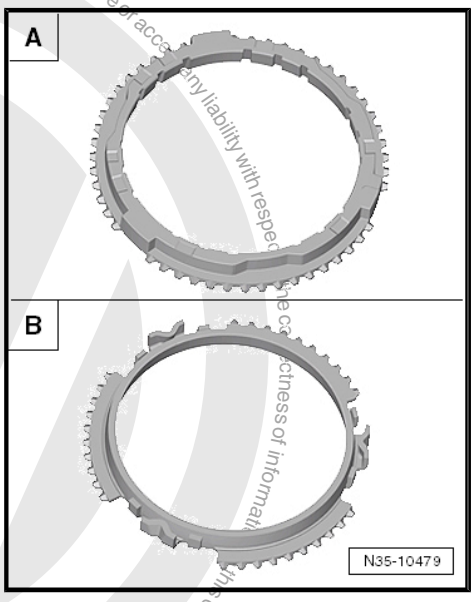

Protected by copyright. Copying for private or commercial purposes, in part or in whole, is not permitted unless authorised by Volkswagen AG. Volkswagen AG does not guarantee or accept any liability with respect to the correctness of information in this document. Copyright by Volkswagen AG.

– Press synchronizer ring onto taper of the gear wheel and measure gap dimension -a- using a feeler gauge.

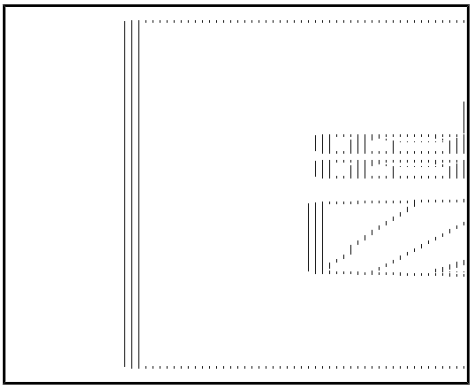

Installed Position: Locking Collar/Synchronizer Hub for 3rd and 4th Gears

The wider collar on the synchronizer hub -arrow- faces the 3rd gear.

– Place the synchronizer ring for 4th gear on the 4th gear wheel.

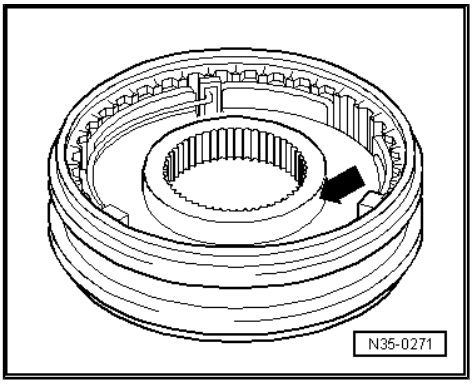

Installing the Synchronizer Hub with Locking Collar for 3rd and 4th Gears

– Turn the synchronizer ring so that the grooves line up with the locking pieces.

– Install the locking ring.

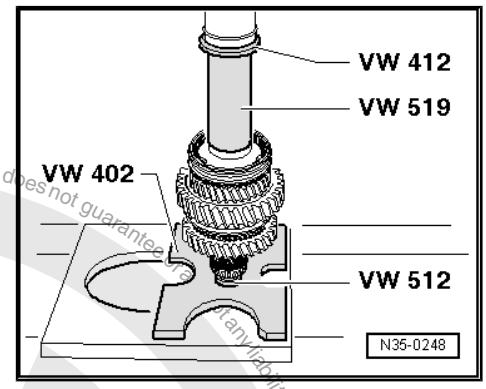

Installing the 3rd Gear Synchronizer Ring, Outer Ring and Inner Ring

– Install the synchronizer ring -A- in the synchronizer hub.

The tabs -1- lock in the openings -2- in the synchronizer hub.

– Install the outer race -B- in the synchronizer ring.

The tabs -3- face away from the synchronizer ring.

– Install the inner race -C- in the outer race.

The tabs -4- lock in the larger openings -5- in the synchronizer ring -A-.

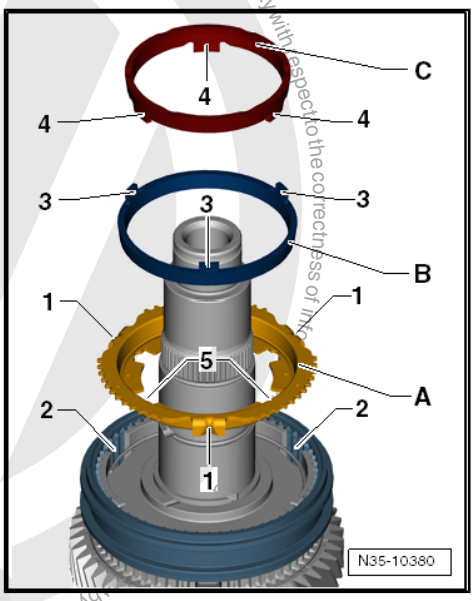

Protected by copyright. Copying for private or commercial purposes, in part or in whole, is not permitted unless authorised by Volkswagen AG. Volkswagen AG does not guarantee or accept any liability with respect to the correctness of info

Installing the 3rd Gear Wheel with Needle Bearing

- The synchronizer ring -1- and the tabs -arrow A- are inside the openings in the synchronizer hub -2-.

The pins -arrows B- in the outer race lock in the recesses -arrows C- in the gear wheel -3-.

– Install the 3rd gear wheel with the needle bearing.

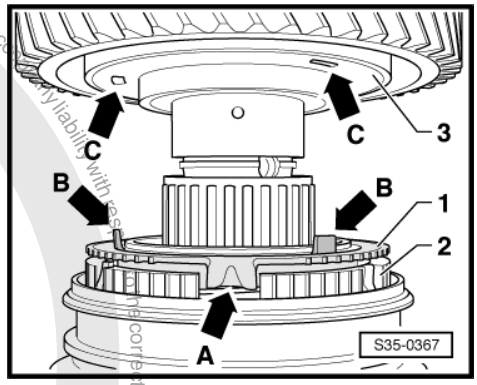

Note

- *Pressing on inner race/tapered roller bearing. Refer to ⇒ Fig. ""Installing the Inner Race/Tapered Roller Bearing on the Side of the Transmission Housing"", page 323 .*
- *Selecting the locking ring for the inner race/tapered roller bearing. Refer to ⇒ Fig. ""Selecting The Locking Ring"", page 323 .*

2.3 Output Shaft 1st through 4th Gear, Adjusting

⇒ "2.3.1 Determining the Shim", page 341
⇒ "2.3.2 Shim Table", page 342
⇒ "2.3.3 Checking Measurement", page 342

Special tools and workshop equipment required

- Transmission Support - VW353-
- Dial Gauge Holder - VW387-
- Press Piece - Rod - VW407-
- Press Piece - Multiple Use - VW433-
- Seal Installer - Stator - VW792-
- Crankshaft Holding Fixture - VW801-
- Holding Plate - VW309A-
- Slide Hammer - Press Plate - 2050-
- Torque Wrench 1331 5-50Nm - VAG1331-
- -1- Puller - Kukko Internal - 46-56mm - 21/7-
- -4- Puller - Kukko Counterstay - 22/2-

(Selecting the correct adjusting shim for the output shaft)

It is necessary to adjust the output shaft if the following components were replaced:

- Transmission housing
- Clutch housing
- Output shaft for 1st to 4th gears or
- Output shaft tapered roller bearing

Adjustment overview. Refer to
⇒ "4 Overview - Adjustment", page 393 .

Requirements

- Remove any sealant remaining on the sealing surfaces on the clutch and transmission housing.
- Install the output shaft that is going to be measured.

Protected by copyright. Copying for private or commercial purposes, in part or in whole, is not permitted unless authorised by Volkswagen AG. Volkswagen AG does not guarantee or accept any liability with respect to the correctness of information in this document. Copyright by Volkswagen AG.

– Install the tapered roller bearing outer race in the transmission housing with a 1.70 mm shim. Support transmission housing directly beneath bearing mount using Slide Hammer - Press Plate - 2050- .

– Install the output shaft for 1st through 4th gears into the clutch housing.

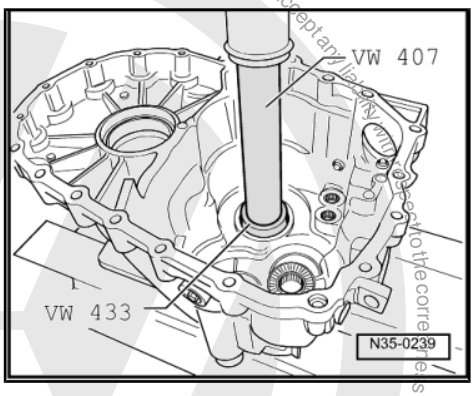

– Install the transmission housing and tighten the bolts -A and B- diagonally to the tightening specification.

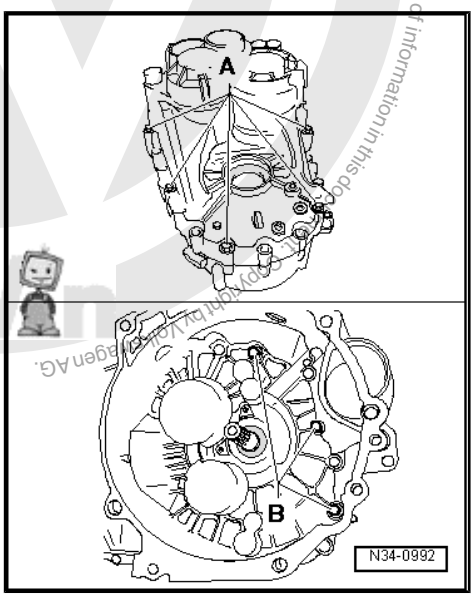

– Position the measuring tools on the clutch housing and secure them with a bolt -arrow-.

– Set the dial gauge (3 mm range) with 1 mm preload to “0”.

– Loosen securing bolts for clutch housing/transmission housing in diagonal sequence until bolts the clear transmission housing or the output shaft.

– Read measured value on dial indicator and note (example: 0.14 mm).

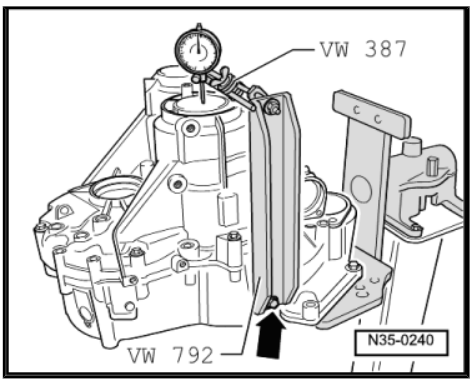

Note

- *The measured value will not be displayed when loosening the bolts that connect the clutch housing to the transmission housing.*
- *Install a 1.95 mm shim or, if necessary, a 2.20 mm shim in place of the 1.70 mm shim for measuring.*
- *Allocate the shims. Refer to the Parts Catalog.*

2.3.1 Determining the Shim

The required bearing tension is reached as follows:

The specified bearing pre-load is reached when determined measured value (0.14 mm) is subtracted from inserted adjustment shim (1.70 mm).

A constant figure of (0.20 mm) is added to the reading.

Example

Inserted shim	1.70 mm
- Measured value	0.14 mm
+ Preload (constant value)	0.20 mm
Shim thickness	1.76 mm

– Select the correct shim thickness according to the table. Refer to ⇒ “2.3.2 Shim Table”, page 342 .

– Remove the transmission housing and remove the tapered roller bearing outer race from the transmission housing.

A - Counter Support , for example, Puller - Kukko Counterstay - 22/2-

B - Internal Puller 46 to 58 mm , for example, Puller - Kukko Internal - 46-56mm - 21/7-

– Remove the inserted shim (1.70 mm) from the transmission housing.

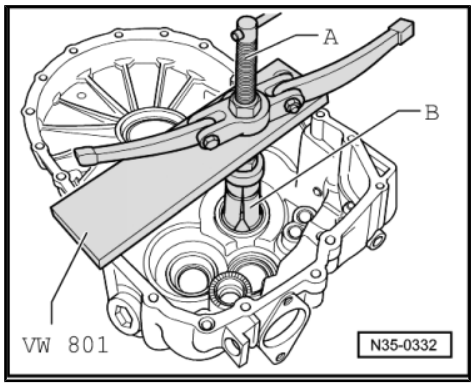

2.3.2 Shim Table

	Thickness (mm)	
1.45	1.75	2.05
1.50	1.80	2.10
1.55	1.85	2.15
1.60	1.90	2.20
1.65	1.95	2.25
1.70	2.00	

Tolerance variations make it possible to find the exact shim thickness required.

– Shim part number. Refer to the Parts Catalog.

– Install the outer race/tapered roller bearing with the selected shim (in the example: 1.75 mm) Support transmission housing directly beneath bearing mount using Slide Hammer - Press Plate - 2050- .

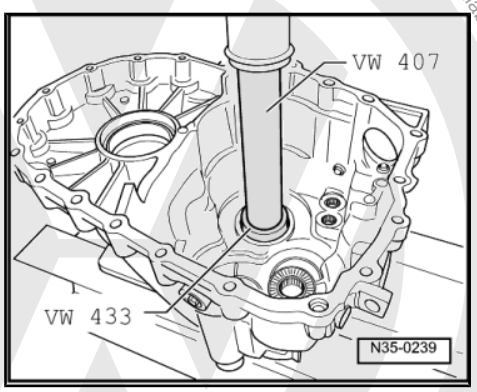

2.3.3 Checking Measurement

- The selected adjusting shim is installed.

Protected by copyright. Copying for private or commercial purposes, in part or in whole, is not permitted unless authorised by Volkswagen AG. Volkswagen AG does not guarantee or accept any liability with respect to the correctness of information in this document. Copyright by Volkswagen AG.

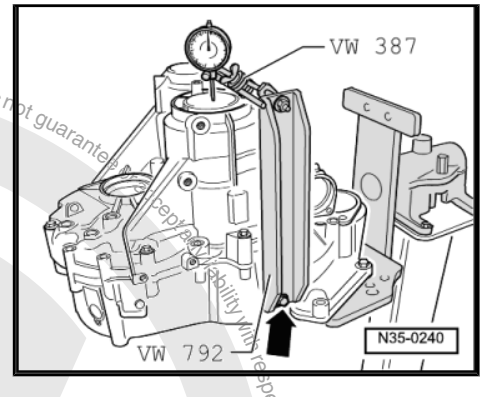

– Position the measuring tools on the clutch housing and secure them with a bolt -arrow-.
– Set the dial gauge (3 mm range) with 1 mm preload to “0”.
– Loosen securing bolts for clutch housing/transmission housing in diagonal sequence until bolts the clear transmission housing or the output shaft.

• For correctly selected adjustment shim, dial gauge must now display a value of 0.15 mm to 0.25 mm.

Protected by copyright. Copying for private or commercial purposes, in part or in whole, is not permitted unless authorized by Volkswagen AG. Volkswagen AG does not guarantee or accept any liability with respect to the correctness of information in this document. Copyright by Volkswagen AG.

3 5th, 6th and Reverse Gear Output Shaft

⇒ “3.1 Overview - Input Shaft, 5th/6th and Reverse Gears”, page 344

⇒ “3.2 Output Shaft, 5th, 6th and Reverse Gears, Disassembling and Assembling”, page 348

⇒ “3.3 Output Shaft, 5th, 6th and Reverse Gears, Adjusting”, page 353

3.1 Overview - Input Shaft, 5th/6th and Reverse Gears

Output Shaft, 5th, 6th and Reverse Gears, Disassembling and Assembling. Refer to
⇒ “3.2 Output Shaft, 5th, 6th and Reverse Gears, Disassembling and Assembling”, page 348 .

Note

- *Secure the transmission on the assembly stand. Refer to* *⇒ “7 Transmission, Securing in Engine/Transmission Holder”, page 191* .
- *To install, warm the inner races/tapered roller bearing and synchronizer hub to approximately 100 °C (212 °F) using Inductive Heater - VAS6414- . Wear protective gloves.*
- *Adjust the output shaft if it or the tapered roller bearing are being replaced. Refer to* *⇒ “3.3 Output Shaft, 5th, 6th and Reverse Gears, Adjusting”, page 353* .
- *Replace both tapered roller bearings together.*

Protected by copyright. Copying for private or commercial purposes, in part or in whole, is not permitted unless authorised by Volkswagen AG. Volkswagen AG does not guarantee or accept any liability with respect to the correctness of information in this document. Copyright by Volkswagen AG.

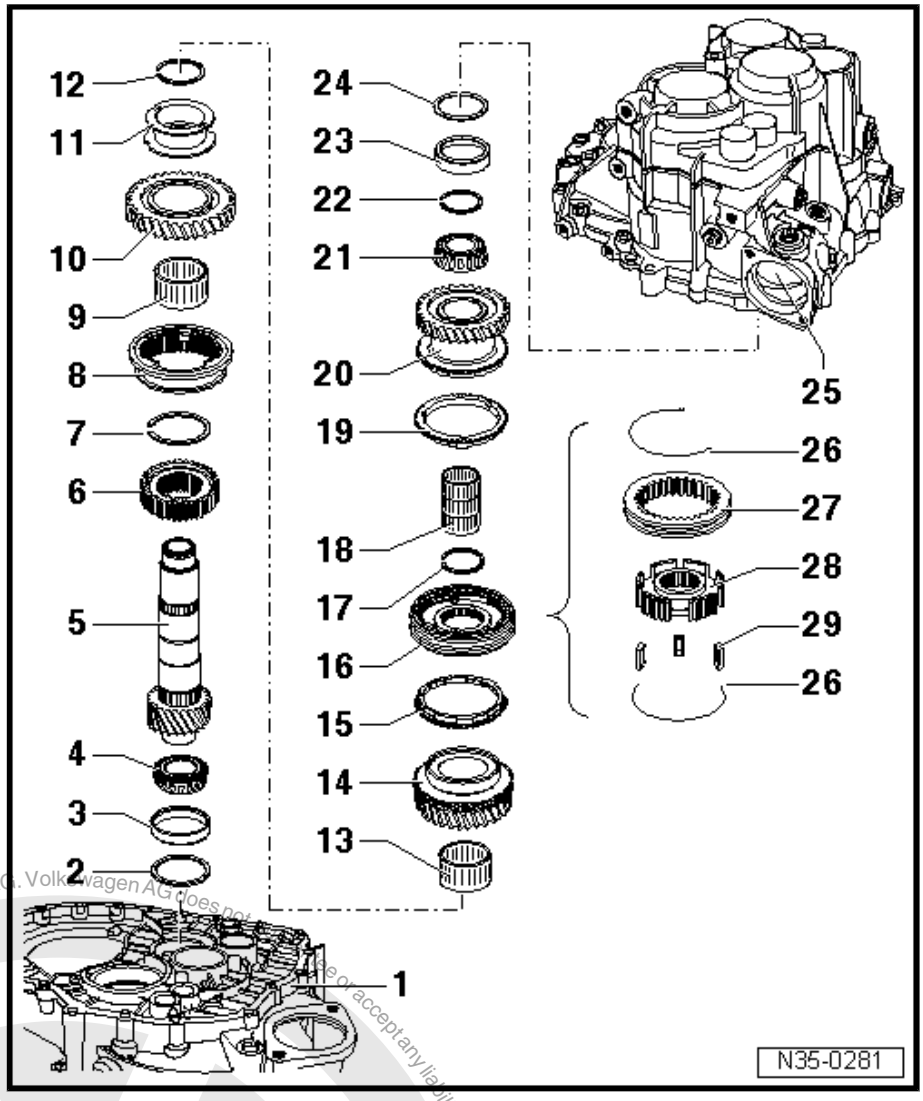

1 - Clutch Housing

2 - Washer

- ❑ Always 0.65 mm thick

3 - Outer Race/Tapered Roller Bearing

- ❑ Removing. Refer to ⇒ Fig. ""Removing the Outer Race/Tapered Roller Bearing"" , page 348 .
- ❑ Installing. Refer to ⇒ Fig. ""Installing the Outer Race/Tapered Roller Bearing in the Clutch Housing"" , page 349 .

4 - Inner Race / Tapered Roller Bearing

- ❑ Removing. Refer to ⇒ Fig. ""Removing the Inner Race/Tapered Roller Bearing on the Side of the Clutch Housing."" , page 350
- ❑ Installing. Refer to ⇒ Fig. ""Installing the Inner Race/Tapered Roller Bearing on the Side of the Clutch Housing"" , page 353 .

5 - Output Shaft

- ❑ For 5th, 6th and Reverse Gears
- ❑ Adjusting. Refer to ⇒ "3.3 Output Shaft, 5th, 6th and Reverse Gears, Adjusting", page 353 .

6 - Reverse Gear Synchronizer Hub

- ❑ Removing. Refer to ⇒ Fig. ""Removing the Reverse Gear Synchronizer Hub"" , page 350 .
- ❑ Installation position. Refer to ⇒ Fig. ""Installed Position: Reverse Gear Synchronizer Hub"" , page 351 .
- ❑ Installing. Refer to ⇒ Fig. ""Warming and Installing the Reverse Gear Synchronizer Hub"" , page 351 .

7 - Circlip

8 - Reverse Gear Locking Collar

- ❑ With synchronizer ring

9 - Needle Bearing

- ❑ For reverse gear wheel

10 - Reverse Gear Wheel

11 - Sleeve

- ❑ Remove with the reverse gear wheel. Refer to ⇒ Fig. ""Removing the Sleeve -A- Together with the Reverse Gear Wheel"" , page 350
- ❑ Installed position: the wider collar on sleeve points toward reverse gear selector gear
- ❑ Installing. Refer to ⇒ Fig. ""Installing the Sleeve -A- "" , page 351 .

12 - Circlip

13 - Needle Bearing

- ❑ For 6th gear

Protected by copyright. Copyright by Volkswagen AG. Volkswagen AG does not guarantee or accept any liability with respect to the correctness of information in this document. Copying for private or commercial purposes, in part or in whole, is not permitted unless authorized by Volkswagen AG.

Protected by copyright. Copying for private or commercial purposes, in part or in whole, is not permitted unless authorised by Volkswagen AG. Volkswagen AG does not guarantee or accept any liability with respect to the correctness of information in this document. Copyright by Volkswagen AG.

14 - 6th Gear Wheel

15 - 6th Gear Synchronizer Ring

- ❑ Brass or steel
- ❑ Checking for wear. Refer to
  ⇒ Fig. ""Check the 5th and 6th Gear Synchronizer Ring for Wear"" , page 351

16 - Locking Collar with Synchronizer Hub for 5th and 6th Gears

- ❑ After removing circlip -item 17- ⇒ Item 17 (page 346) , remove the 6th gear wheel. Refer to
  ⇒ Fig. ""Removing the 5th and 6th Gear Synchronizer Hub/Locking Collar with the 6th Gear Wheel"" , page 350
- ❑ Disassembling. Refer to
  ⇒ Fig. ""Disassembling and Assembling Locking Collar and Synchronizer Hub for 5th and 6th Gears"" , page 352 .
- ❑ Assembling the locking collar/synchronizer hub. Refer to
  ⇒ Fig. ""Disassembling and Assembling Locking Collar and Synchronizer Hub for 5th and 6th Gears"" , page 352 and
  ⇒ Fig. ""Assembling Locking Collar/Synchronizer Hub for 5th and 6th Gears"" , page 352
- ❑ Installing. Refer to
  ⇒ Fig. ""Warming and Installing the Locking Collar/Synchronizer Hub for 5th and 6th Gears"" , page 352 .

17 - Circlip

18 - Needle Bearing

- ❑ For 5th gear

19 - 5th Gear Synchronizer Ring

- ❑ Brass or steel
- ❑ Checking for wear. Refer to
  ⇒ Fig. ""Check the 5th and 6th Gear Synchronizer Ring for Wear"" , page 351

20 - 5th Gear Wheel

21 - Inner Race / Tapered Roller Bearing

- ❑ Removing. Refer to
  ⇒ Fig. ""Remove the Inner Race/Tapered Roller Bearing on the Side of the Transmission Housing"" , page 349
- ❑ Installing. Refer to
  ⇒ Fig. ""Installing the Inner Race/Tapered Roller Bearing on the Side of the Transmission Housing"" , page 353 .

22 - Circlip

- ❑ Select the correct one when replacing the tapered roller bearing -item 21- ⇒ Item 21 (page 346) and the output shaft -item 5- ⇒ Item 5 (page 345) ⇒ Fig. ""Selecting the Locking Ring"" , page 353

23 - Outer Race/Tapered Roller Bearing

- ❑ Removing. Refer to
  ⇒ Fig. ""Removing the Outer Race/Tapered Roller Bearing from the Transmission Housing"" , page 349 .
- ❑ Installing. Refer to
  ⇒ Fig. ""Installing the Outer Race/Tapered Roller Bearing into the Transmission Housing."" , page 349 .

24 - Shim

- ❑ Selecting thickness. Refer to ⇒ "3.3 Output Shaft, 5th, 6th and Reverse Gears, Adjusting", page 353 .

25 - Transmission Housing

26 - Spring

- ❑ Installation position. Refer to
  ⇒ Fig. ""Assembling Locking Collar/Synchronizer Hub for 5th and 6th Gears"" , page 352 .

27 - Locking Collar

28 - Synchronizer Hub

29 - Locking Pieces (quantity: 3)

- Installation position. Refer to
⇒ Fig. ""Disassembling and Assembling Locking Collar and Synchronizer Hub for 5th and 6th Gears"" , page 352 .

Protected by copyright. Copying for private or commercial purposes, in part or in whole, is not permitted unless authorised by Volkswagen AG. Volkswagen AG does not guarantee or accept any liability with respect to the correctness of information in this document. Copyright by Volkswagen AG.

3.2 Output Shaft, 5th, 6th and Reverse Gears, Disassembling and Assembling

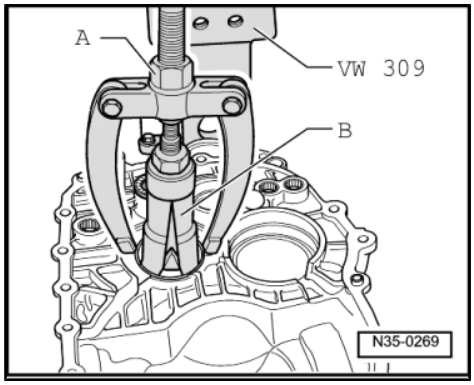

Special tools and workshop equipment required

- Press Plate - VW401-
- Press Plate - VW402-
- Press Piece - Rod - VW407-
- Press Piece - Rod - VW408A-
- Press Piece - Multiple Use - VW412-
- Press Piece - 60mm - VW415A-
- Holding Plate - VW309A-
- Transmission Support - VW353-
- Press Piece - Multiple Use - VW433-
- Press Piece - Multiple Use - VW454-
- Support Channels - VW457-
- Crankshaft Holding Fixture - VW801-
- Press Piece - Multiple Use - VW431-
- Press Piece - Multiple Use - VW455-
- Press Piece - Multiple Use - VW510-
- Press Piece - 42mm - VW516-
- Press Piece - Multiple Use - VW519-
- Press Piece - Multiple Use - 30-11-
- Press Piece - Multiple Use - 40-105-
- Bearing Installer - Multiple Use - 40-20-
- Slide Hammer - Press Plate - 2050-
- Press Piece - Reverse Gear Syncro - 3296-
- Puller - Taper Roller Bearing - VAG1582-
- Puller - Taper Roller Bearing - Adapter 4 - VAG1582/4-
- Puller - Taper Roller Bearing - Adapter 7 - VAG1582/7-
- Inductive Heater - VAS6414-
- -1- Puller - Kukko Internal - 46-56mm - 21/7-
- -3- Puller - Kukko Quick Action Separating Tool - 22-115mm - 17/2-
- -4- Puller - Kukko Counterstay - 22/2-

Removing the Outer Race/Tapered Roller Bearing

A - Counter Support , for example, Puller - Kukko Counterstay - 22/2-

B - Internal Puller 46 to 58 mm , for example, Puller - Kukko Internal - 46-56mm - 21/7-

Protected by copyright. Copying for private or commercial purposes, in part or whole, is not permitted unless authorised by Volkswagen AG. Volkswagen AG does not guarantee or accept any liability with respect to the correctness of information in this document. Copyright by Volkswagen AG.

Note

Check the washer for damage after removing it and replace if necessary.

Protected by copyright. Copyright by Volkswagen AG. Volkswagen AG does not guarantee or accept any liability with respect to the correctness of the information in this document. Copyright by Volkswagen AG. Protected by copyright. Copying for private or commercial purposes, in part or in whole, is not permitted unless authorised by Volkswagen AG.

Installing the Outer Race/Tapered Roller Bearing in the Clutch Housing

– Place the washer under the outer race.

– Support the clutch housing with the Bearing Installer - Multiple Use - 40-20- directly under the bearing mount.

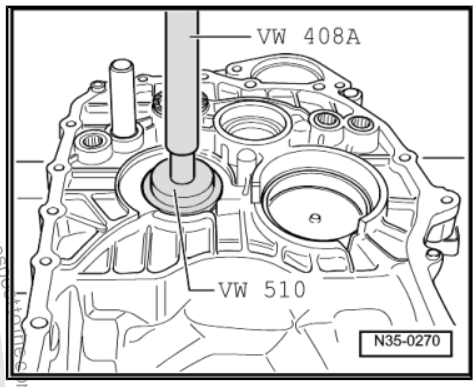

Removing the Outer Race/Tapered Roller Bearing from the Transmission Housing

A - Counter Support , for example, Puller - Kukko Counterstay - 22/2-

B - Internal Puller 46 to 58 mm , for example, Puller - Kukko Internal - 46-56mm - 21/7-

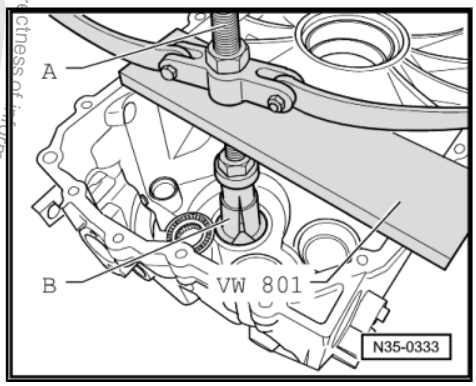

Installing the Outer Race/Tapered Roller Bearing into the Transmission Housing.

– Support the transmission housing under the bearing mount using the Slide Hammer - Press Plate - 2050- .

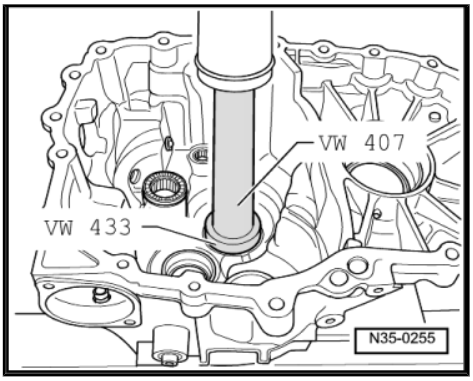

Disassembling the Output Shaft

Remove the Inner Race/Tapered Roller Bearing on the Side of the Transmission Housing

Before installing the Tapered Roller Bearing Puller :

– Remove the inner race/tapered roller bearing locking ring on the side facing the transmission housing.

– Place the Press Piece - Multiple Use - VW431- and Press Piece - Multiple Use - 40-105- on the output shaft.

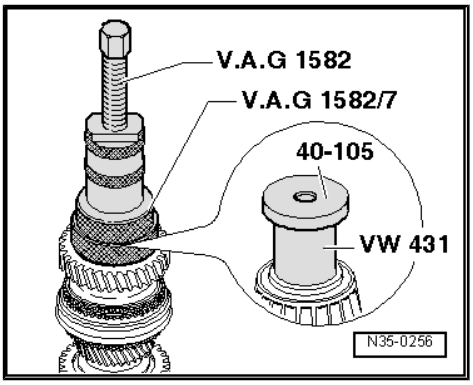

Removing the 5th and 6th Gear Synchronizer Hub/Locking Collar with the 6th Gear Wheel

– Remove the locking ring beforehand.

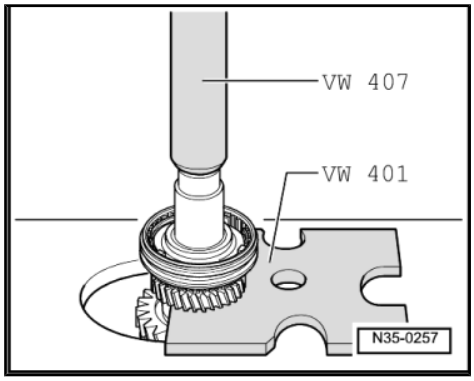

Removing the Sleeve -A- Together with the Reverse Gear Wheel

– Remove the locking ring beforehand.

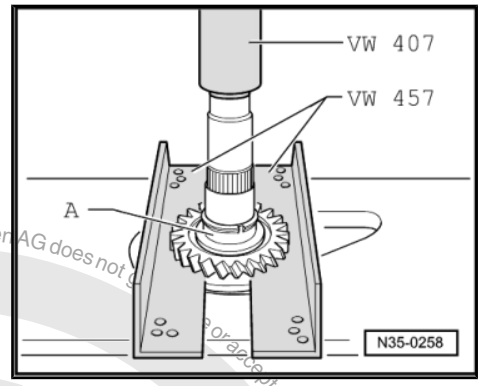

Removing the Reverse Gear Synchronizer Hub

– Remove the locking ring beforehand.

A - 22 to 115 mm Separating Tool , for example Puller - Kukko Quick Action Separating Tool - 22-115mm - 17/2-

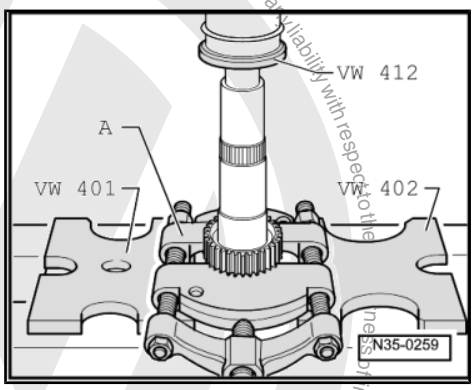

Removing the Inner Race/Tapered Roller Bearing on the Side of the Clutch Housing.

– Mount the Press Piece - Multiple Use - 30-11- on the output shaft before removing the puller.

Assemble the Output Shaft.

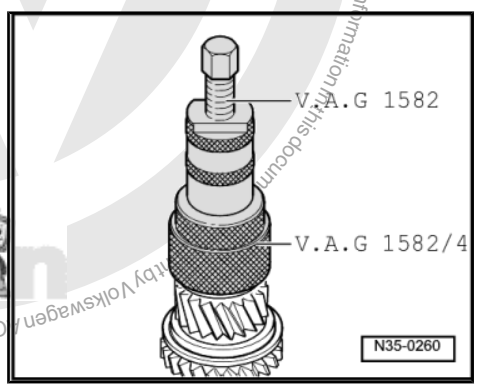

Note

Heat the tapered bearing inner races and synchronizer hub to approximately 100 °C (212 °F) with the Inductive Heat Unit - VAS6414- before installing. Press on to the stop so that there is no axial clearance when assembling.

Copyright by Volkswagen AG. Volkswagen AG does not guarantee or accept any liability with respect to the correctness of information in this document. Copying for private or commercial purposes, in part or in whole, is not permitted unless authorised by Volkswagen AG.

Installed Position: Reverse Gear Synchronizer Hub

- The stop -arrow A- on the reverse gear locking collar faces the splines on the output shaft -arrow B-.

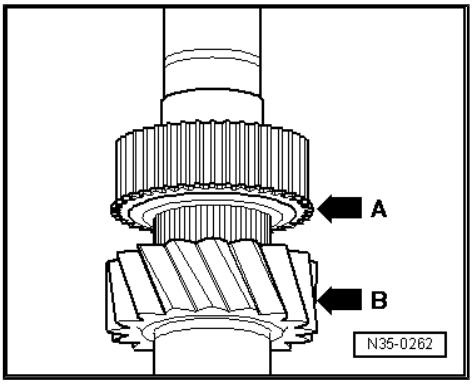

Warming and Installing the Reverse Gear Synchronizer Hub

– Install the locking ring.
– Mount the reverse gear locking collar on the reverse gear synchronizer hub.
– Install the reverse gear wheel and the needle bearing.

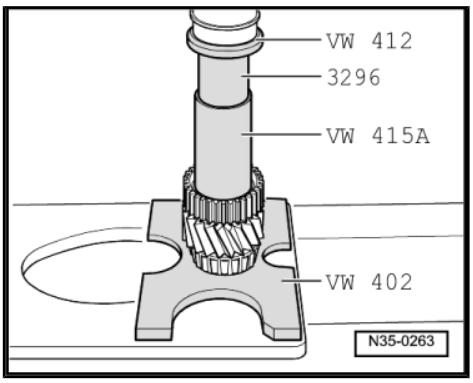

Installing the Sleeve -A-

- Installed position: wide collar points toward reverse gear selector gear.

– Install the circlip.

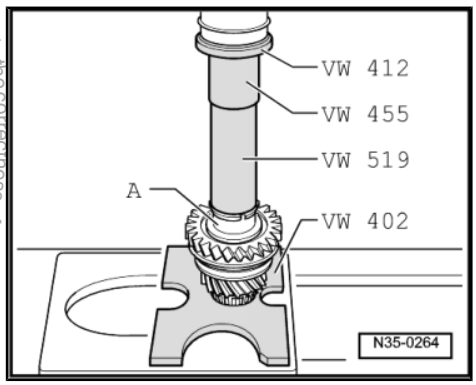

Check the 5th and 6th Gear Synchronizer Ring for Wear

-A- = Brass Synchronizer Ring		
Gap Dimension -a-	Installation Dimension	Wear Limit
5th and 6th gear	1.0 to 1.7 mm	0.5 mm

-B- = Steel Synchronizer Ring		
Gap Dimension -a-	Installation Dimension	Wear Limit
5th and 6th gear	1.2 to 2.1 mm	0.8 mm

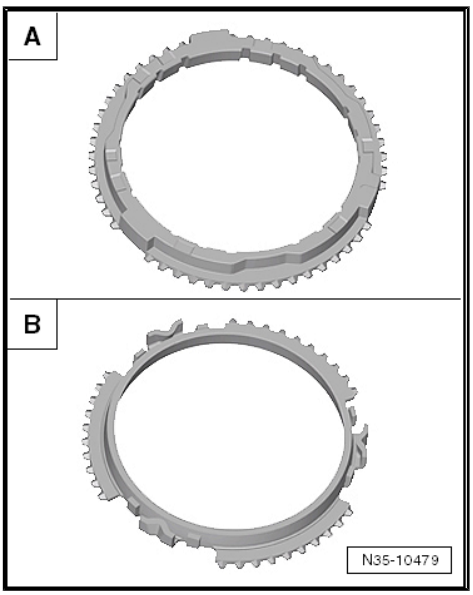

Copyright by Volkswagen AG. Volkswagen AG does not guarantee or accept any liability with respect to the correctness of information in this document. Copyright by Volkswagen AG. Protected by copyright. All rights reserved. Private or commercial purposes, in part or in whole, is not permitted unless authorized by Volkswagen AG.

Protected by copyright. Copying for private or commercial purposes, in part or in whole, is not permitted unless authorised by Volkswagen AG. Volkswagen AG does not guarantee or accept any liability with respect to the correctness of information in this document. Copyright by Volkswagen AG.

– Press synchronizer ring onto taper of the gear wheel and measure gap dimension -a- using a feeler gauge.

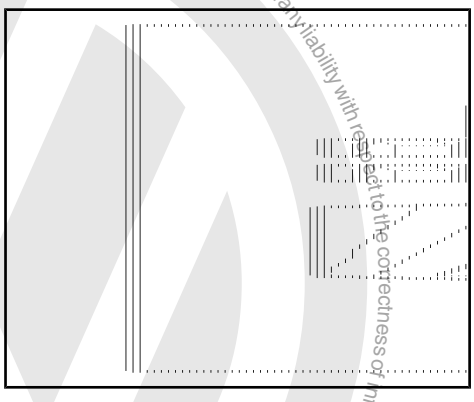

Disassembling and Assembling Locking Collar and Synchronizer Hub for 5th and 6th Gears

– To disassemble, remove the springs -1-.

1 - Spring

2 - Locking piece

3 - Locking collar

4 - Synchronizer hub

– Slide the locking collar over the synchronizer hub.

• Installed position: The narrow locking piece recesses in the synchronizer hub align with the recesses in the locking collar.

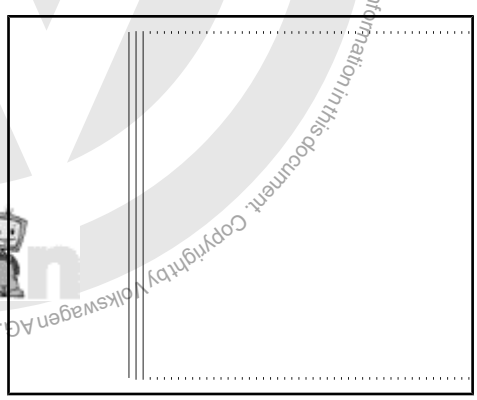

Assembling Locking Collar/Synchronizer Hub for 5th and 6th Gears

• The locking collar is pushed over the synchronizer hub.

– Install the locking pieces and springs offset by 120°.

• The angled end of the spring must engage into the hollow locking piece.

– Install the 6th gear wheel with needle bearing.

– Install the 6th gear synchronizer ring.

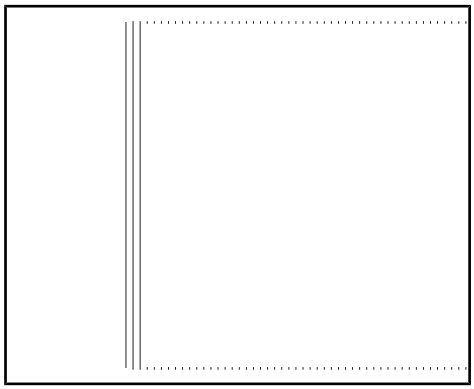

Warming and Installing the Locking Collar/Synchronizer Hub for 5th and 6th Gears

On some locking collars, there is a chamfer on the outer diameter.

Installation position: the bevel on the outer diameter of the locking collar faces toward the 5th gear wheel.

– Turn the 6th gear synchronizer ring so that the grooves line up with the locking pieces.

– Install the locking ring.

– Install the 5th gear synchronizer ring.

– Install 5th gear wheel with needle bearing.

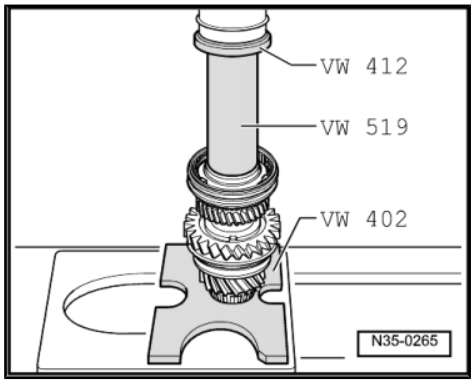

Installing the Inner Race/Tapered Roller Bearing on the Side of the Transmission Housing

– Choose the correct locking ring. Refer to ⇒ Fig. ""Selecting the Locking Ring"" , page 353 and install.

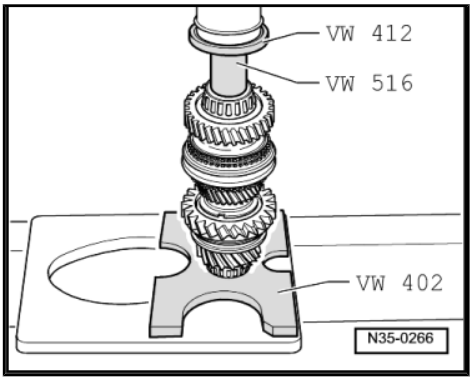

Selecting the Locking Ring

– Choose and install the thickest locking ring that will fit.

– Select the locking ring according to the Table. Part number. Refer to the Parts Catalog.

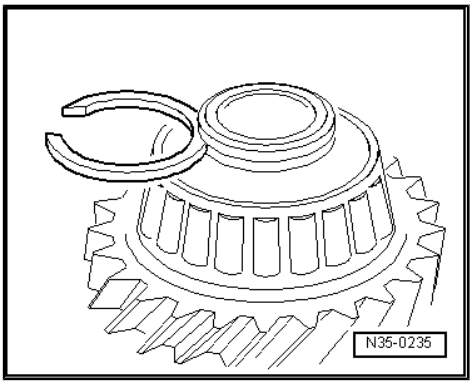

Available Locking Rings

Thickness (mm)		
1.79	1.89	1.98
1.83	1.92	
1.86	1.95	

Installing the Inner Race/Tapered Roller Bearing on the Side of the Clutch Housing

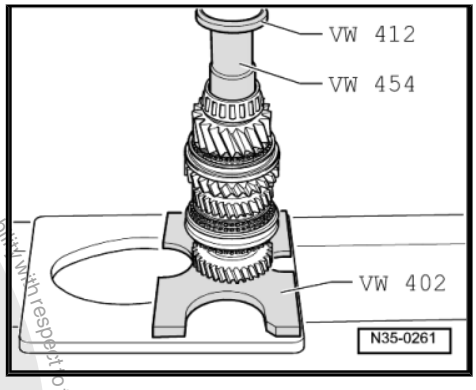

3.3 Output Shaft, 5th, 6th and Reverse Gears, Adjusting

⇒ "3.3.1 Determining the Shim", page 355
⇒ "3.3.2 Shim Table", page 355
⇒ "3.3.3 Checking Measurement", page 356

Special tools and workshop equipment required

- Transmission Support - VW353-
- Dial Gauge Holder - VW387-
- Press Piece - Rod - VW407-
- Press Piece - Multiple Use - VW433-
- Seal Installer - Stator - VW792-
- Crankshaft Holding Fixture - VW801-
- Holding Plate - VW309A-
- Slide Hammer - Press Plate - 2050-
- Torque Wrench 1331 5-50Nm - VAG1331-

Protected by copyright. Copying for private or commercial purposes, in part or in whole, is not permitted unless authorised by Volkswagen AG. Volkswagen AG does not guarantee or accept any liability with respect to the correctness of information in this document. Copyright by Volkswagen AG.

- -1- Puller - Kukko Internal - 46-56mm - 21/7-
- -4- Puller - Kukko Counterstay - 22/2-

It is necessary to adjust the output shaft if the following components were replaced:

- Transmission Housing
- Clutch Housing
- Output Shaft, 5th, 6th and Reverse Gears or
- Output shaft tapered roller bearing

Adjustment overview. Refer to
⇒ “4 Overview - Adjustment”, page 393

Requirements

- Remove any sealant remaining on the sealing surfaces on the clutch and transmission housing.
- Install the output shaft that is going to be measured.

– Install the tapered roller bearing outer race in the transmission housing with a 1.70 mm shim. Support transmission housing directly beneath bearing mount using Slide Hammer - Press Plate - 2050- .

– Install the output shaft for 5th/6th gears and reverse gear into the clutch housing.

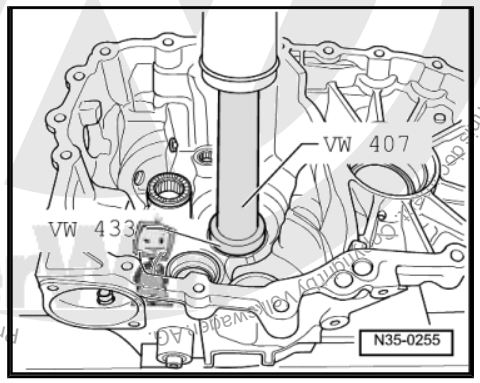

– Install the transmission housing and tighten the bolts -A and B- diagonally to the tightening specification.

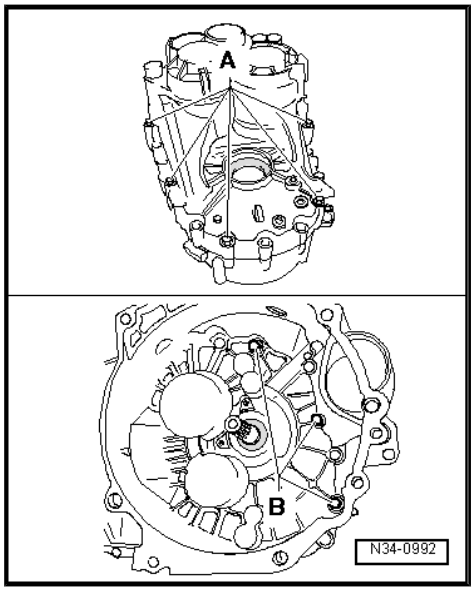

Protected by copyright. Copying for private or commercial purposes, in part or in whole, is not permitted unless authorised by Volkswagen AG. Volkswagen AG does not guarantee or accept any liability with respect to the correctness of information in this document. Copyright by Volkswagen AG.

– Install the measuring tools.

– Place several washers (total thickness: 8 mm) on the clutch housing at the bolt -arrow- being used to secure the Seal Installer - Stator - VW792- .

– Set the dial gauge (3 mm range) with 1 mm preload to “0”.

– Loosen securing bolts for clutch housing/transmission housing in diagonal sequence until bolts the clear transmission housing or the output shaft.

– Read measured value on dial indicator and note (example: 0.25 mm).

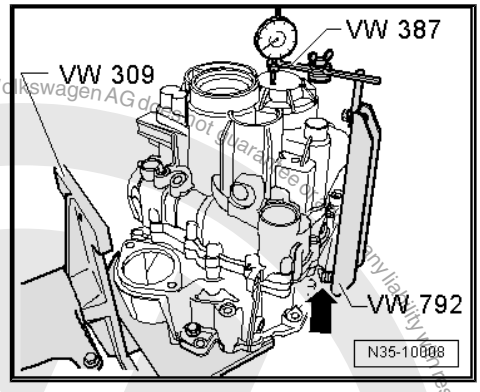

Note

- *The measured value will not be displayed when loosening the bolts that connect the clutch housing to the transmission housing.*
- *Install a 1.95 mm shim or, if necessary, a 2.20 mm shim in place of the 1.70 mm shim for measuring.*
- *Allocate the shims. Refer to the Parts Catalog.*

3.3.1 Determining the Shim

The specified bearing preload is obtained by adding a constant preload figure of (0.20 mm) to the reading obtained (0.25 mm) and the thickness of the shim installed (1.70 mm).

Example

Inserted shim	1.70 mm
- Measured value	0.25 mm
+ Preload (constant value)	0.20 mm
Shim thickness	1.65 mm

– Select the correct shim thickness according to the table. Refer to ⇒ “3.3.2 Shim Table”, page 355 .

– Remove the transmission housing and remove the tapered roller bearing outer race from the transmission housing.

A - Counter Support , for example, Puller - Kukko Counterstay - 2/2-

B - Internal Puller 46 to 58 mm , for example, Puller - Kukko Internal - 46-56mm - 21/7-

– Remove the inserted shim (1.70 mm) from the transmission housing.

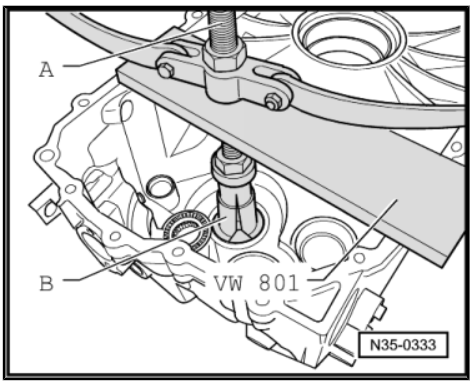

3.3.2 Shim Table

Thickness (mm)		
1.50	1.80	2.10
1.55	1.85	2.15
1.60	1.90	2.20
1.65	1.95	2.25
1.70	2.00	

Protected by copyright. Copyright by Volkswagen AG. Copyright by Volkswagen AG. Volkswagen AG does not guarantee or accept any liability with respect to the correctness of information in this document. Copyright by Volkswagen AG.

Thickness (mm)		
1.75	2.05	

– Part numbers. Refer to the Parts Catalog.

Tolerance variations make it possible to find the exact shim thickness required.

– Install the outer race/tapered roller bearing with the selected shim (in the example: 1.65 mm) Support transmission housing directly beneath bearing mount using Slide Hammer - Press Plate - 2050- .

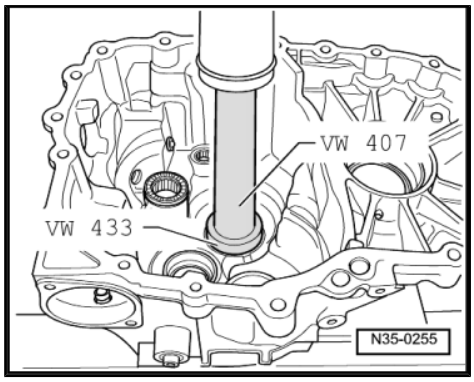

3.3.3 Checking Measurement

- The selected adjusting shim is installed.

– Install the measuring tools.

– Place several washers (total thickness: 8 mm) on the clutch housing at the bolt -arrow- being used to secure the Seal Installer - Stator - VW792- .

– Set the dial gauge (3 mm range) with 1 mm preload to “0”.

– Loosen securing bolts for clutch housing/transmission housing in diagonal sequence until bolts the clear transmission housing or the output shaft.

- For correctly selected adjustment shim, dial gauge must now display a value of 0.15 mm to 0.25 mm.

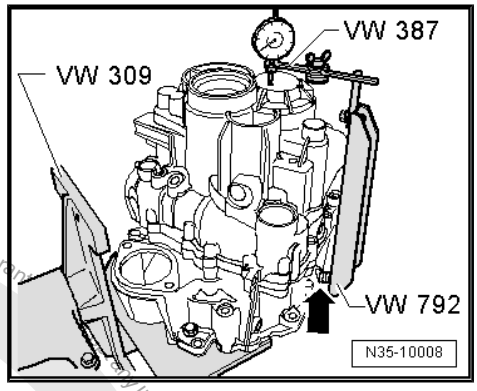

Protected by copyright. Copying for private or commercial purposes, in part or in whole, is not permitted unless authorised by Volkswagen AG. Volkswagen AG does not guarantee or accept any liability with respect to the correctness of information in this document. Copyright by Volkswagen AG.

4 Special Tools

Special tools and workshop equipment required

- Press Plate - VW401-
- Press Plate - VW402-
- Press Piece - Rod - VW407-
- Press Piece - Rod - VW408A-
- Press Piece - Rod - VW412-
- Press Piece - Multiple Use - VW454-

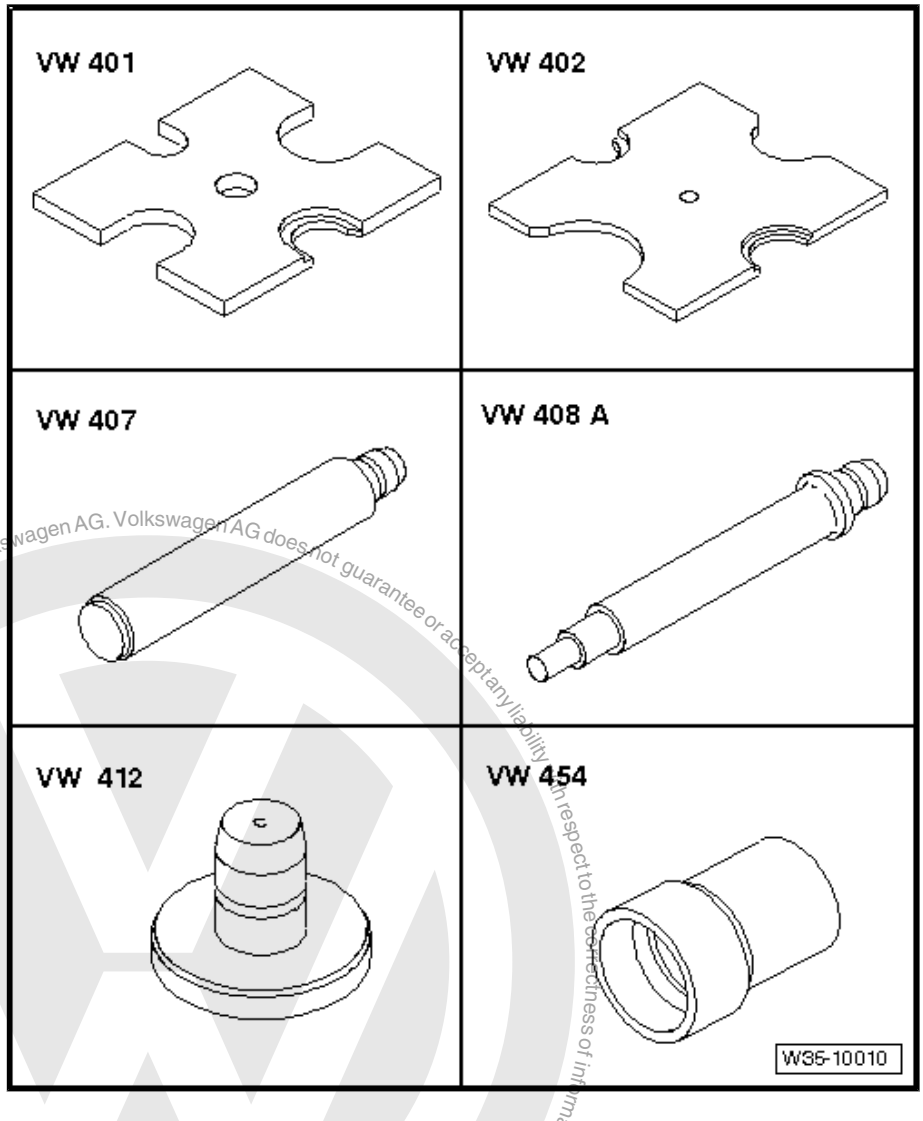

Protected by copyright. Copying for private or commercial purposes, in part or in whole, is not permitted unless authorised by Volkswagen AG. Volkswagen AG does not guarantee or accept any liability with respect to the correctness of information in this document. Copyright by Volkswagen AG.

Protected by copyright. Copying for private or commercial purposes, in part or in whole, is not permitted unless authorised by Volkswagen AG. Volkswagen AG does not guarantee or accept any liability with respect to the correctness of information in this document. Copyright by Volkswagen AG.

- Bearing Installer - Multiple Use - 40-20-
- Bearing Installer - Differential Bearing - 40-21-
- Slide Hammer - Press Plate - 2050-
- Holding Fixture - Spacers - VW540/1B-
- Puller - Taper Roller Bearing - VAG1582-
- Puller - Taper Roller Bearing - Adapter 7 - VAG1582/7-

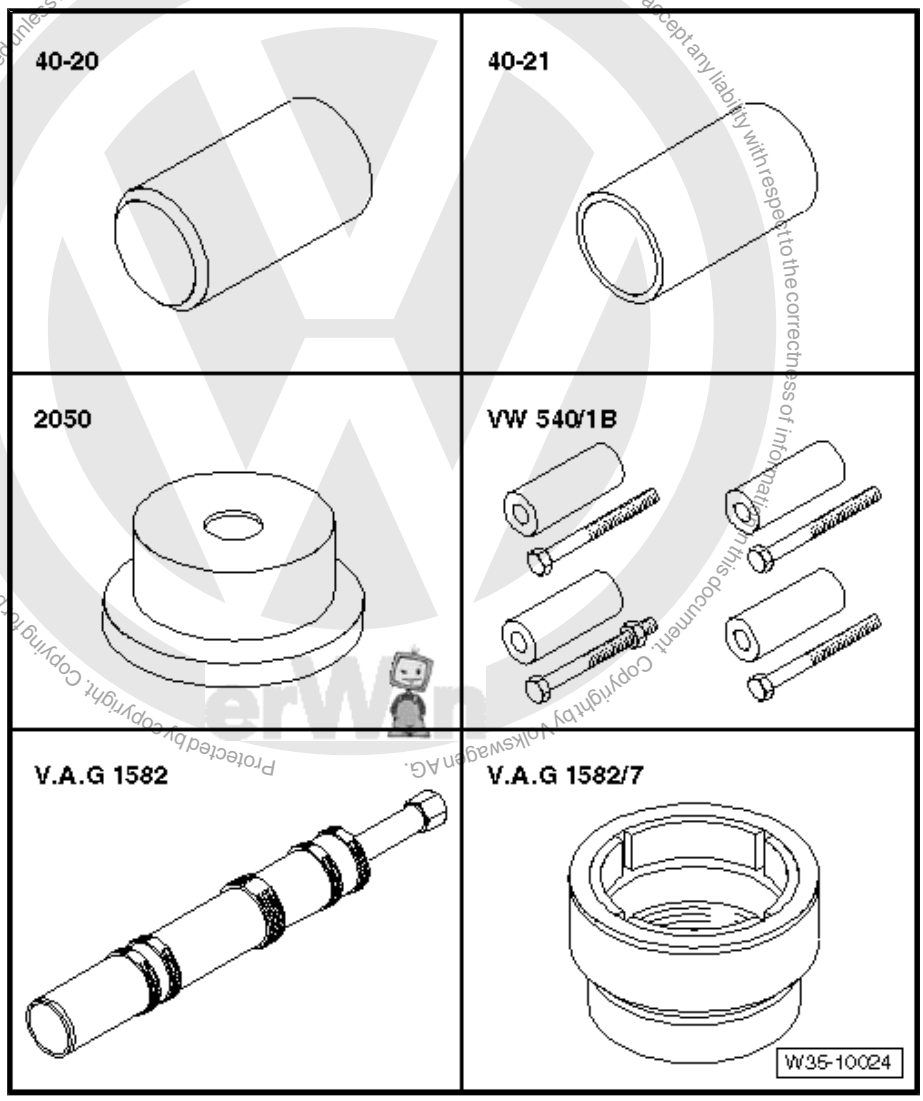

Protected by copyright. Copying for private or commercial purposes, in part or in whole, is not permitted unless authorised by Volkswagen AG. Volkswagen AG does not guarantee or accept any liability with respect to the correctness of information in this document. Copyright by Volkswagen AG.

Special tools and workshop equipment required

- Press Plate - VW401-
- Press Plate - VW402-
- Press Piece - Rod - VW407-
- Press Piece - Rod - VW408A-
- Press Piece - Multiple Use - VW412-
- Press Piece - 60mm - VW415A-

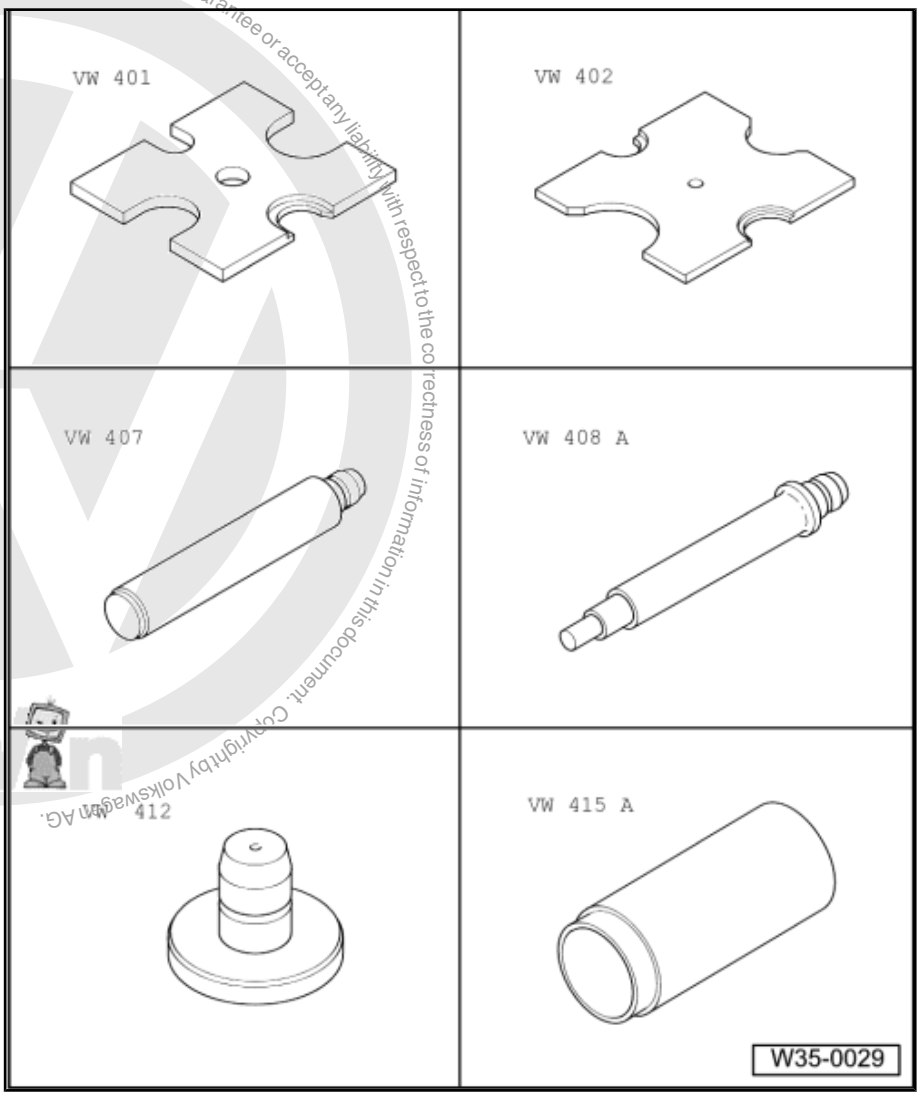

- Holding Plate - VW309A-
- Transmission Support - VW353-
- Press Piece - Multiple Use - VW433-
- Press Piece - Multiple Use - VW454-
- Support Channels - VW457-
- Crankshaft Holding Fixture - VW801-

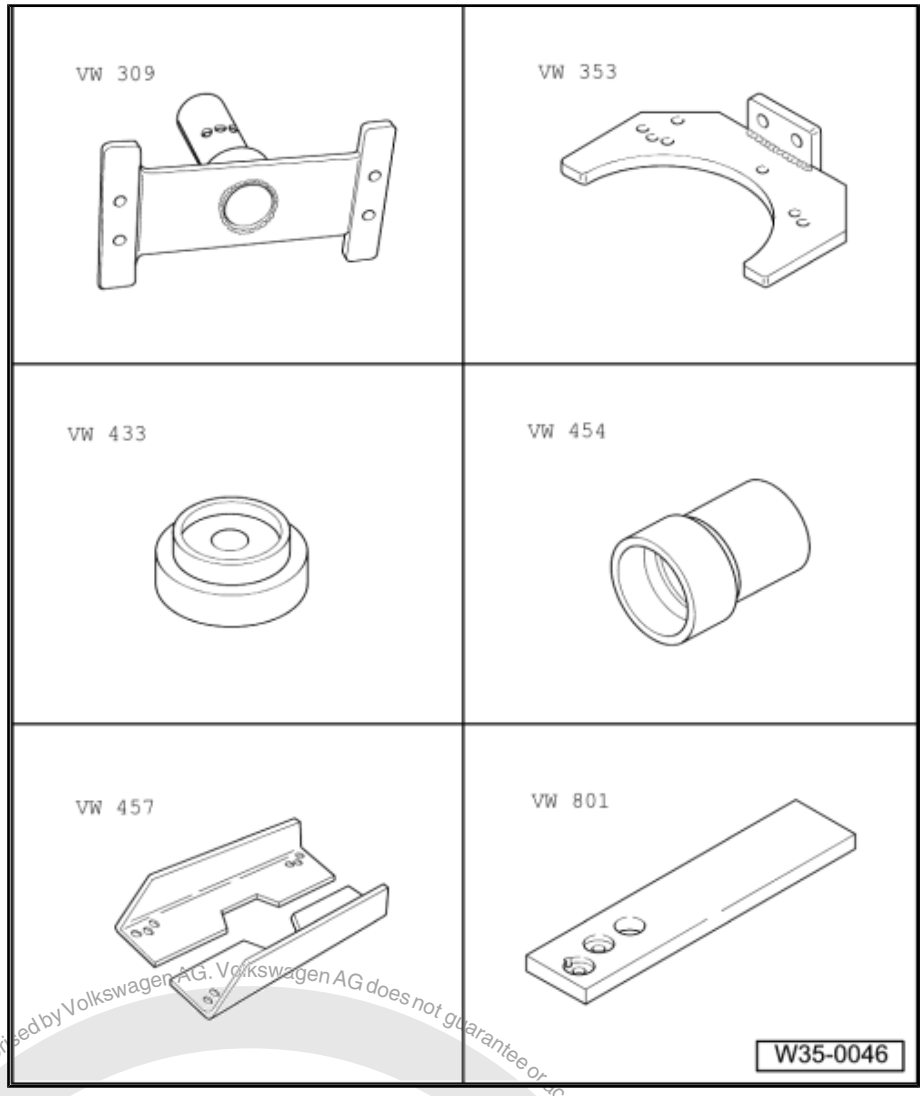

Protected by copyright. Copying for private or commercial purposes, in part or in whole, is not permitted unless authorised by Volkswagen AG. Volkswagen AG does not guarantee or accept any liability with respect to the correctness of information in this document. Copyright by Volkswagen AG.

- Holding Plate - VW309A-
- Holding Fixture - VW313-
- Transmission Support - VW353-
- Press Piece - Multiple Use - VW431-
- Press Piece - Multiple Use - VW433-
- Press Piece - Multiple Use - VW454-

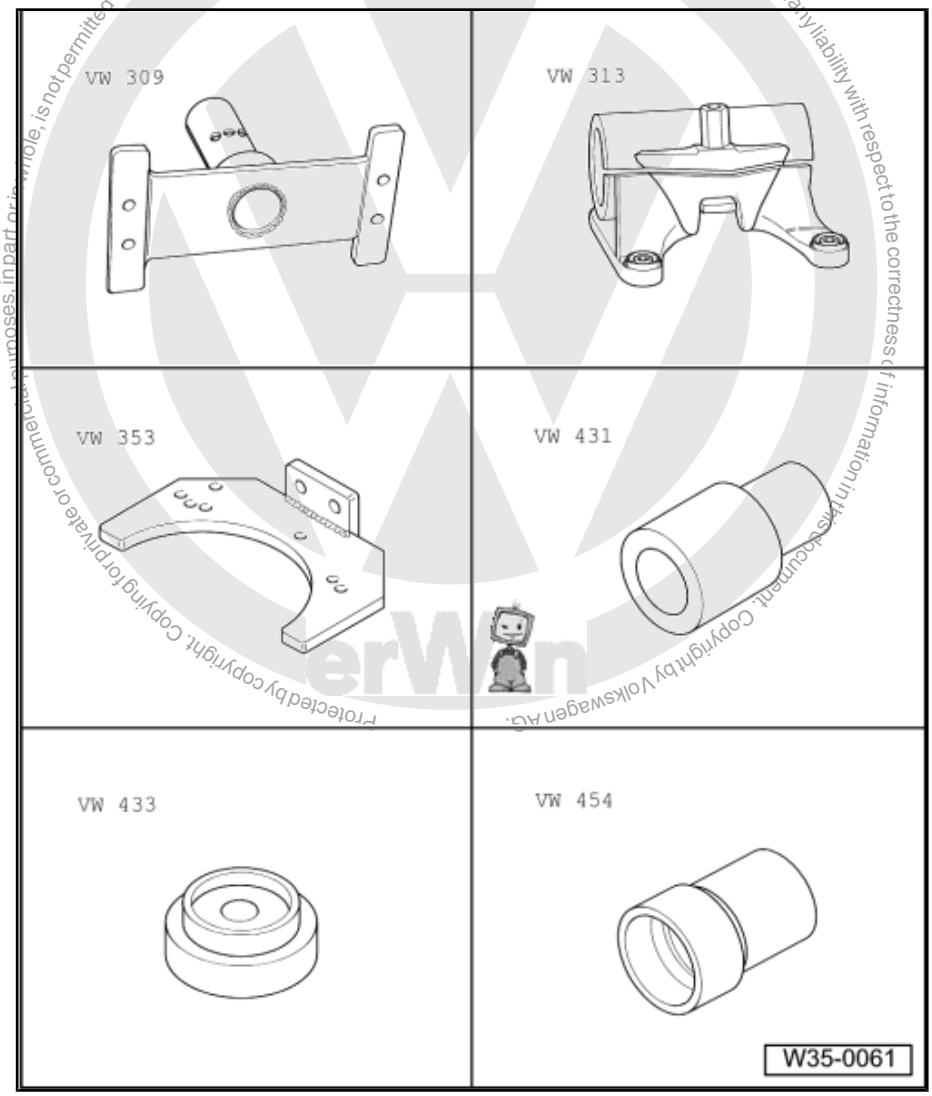

Protected by copyright. Copying for private or commercial purposes, in part or in whole, is not permitted unless authorised by Volkswagen AG. Volkswagen AG does not guarantee or accept any liability with respect to the correctness of information in this document. Copyright by Volkswagen AG.

- Press Piece - Multiple Use - VW512-
- Press Piece - 42mm - VW516-
- Press Piece - Multiple Use - VW519-
- Slide Hammer Set - Hammer - VW771-
- Crankshaft Holding Fixture - VW801-
- Press Piece - Multiple Use - 40-105-

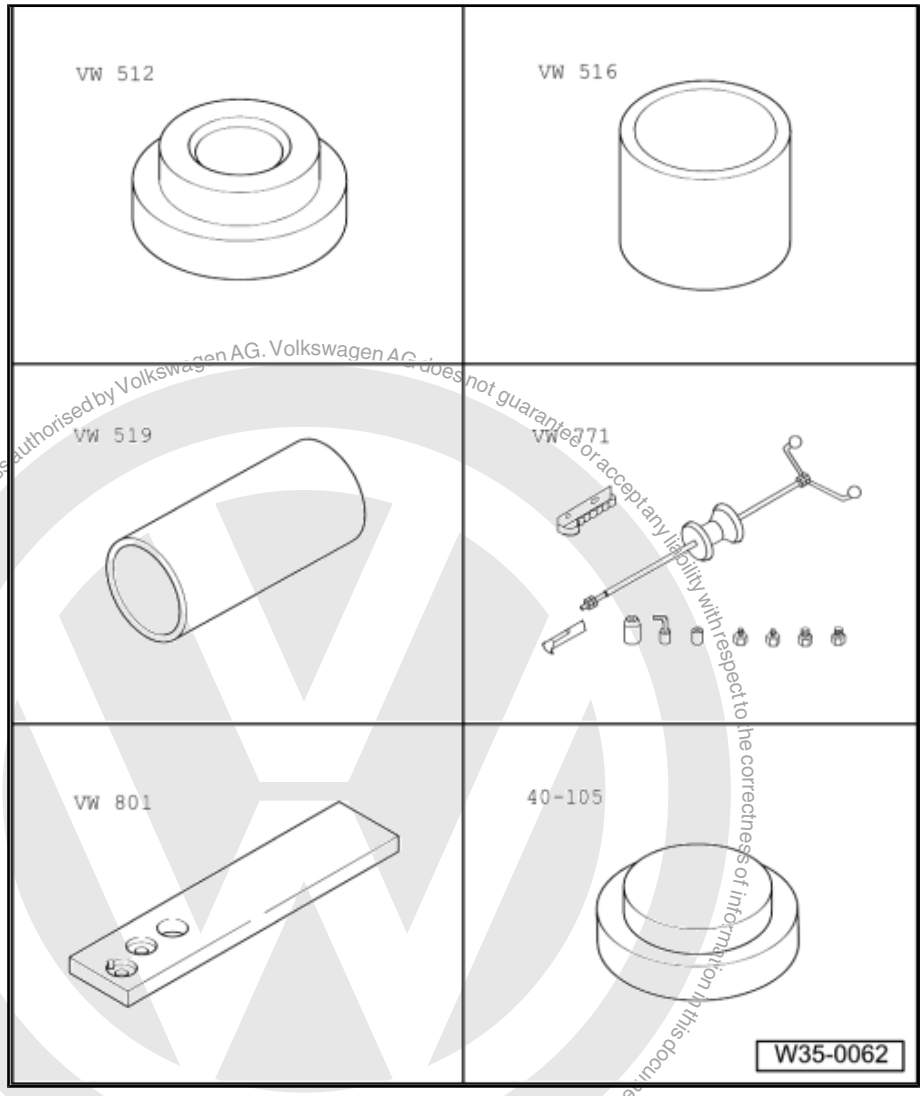

Protected by copyright. Copying for private or commercial purposes, in part or in whole, is not permitted unless authorised by Volkswagen AG. Volkswagen AG does not guarantee or accept any liability with respect to the correctness of information in this document. Copyright by Volkswagen AG.

- Transmission Support - VW353-
- Dial Gauge Holder - VW387-
- Press Piece - Rod - VW407-
- Press Piece - Multiple Use - VW433-
- Seal Installer - Stator - VW792-
- Crankshaft Holding Fixture - VW801-

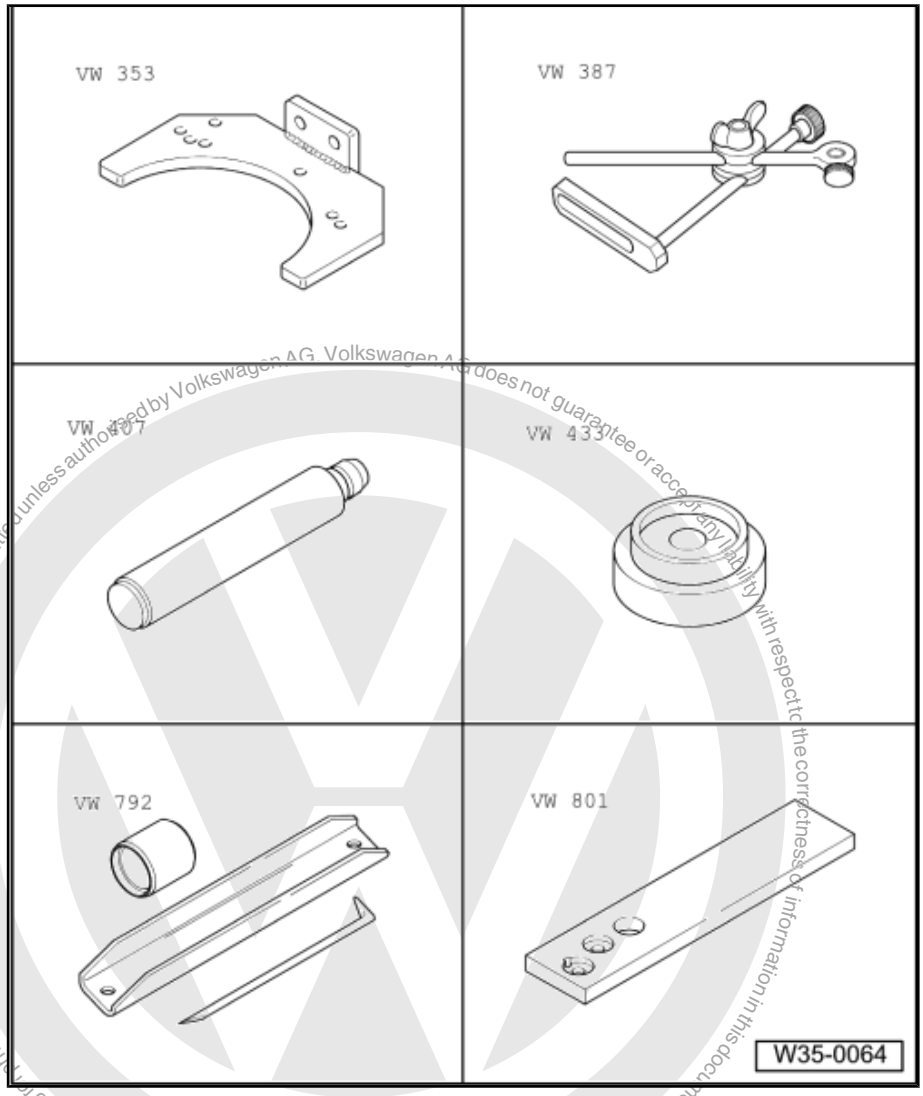

Protected by copyright. Copying for private or commercial purposes, in part or in whole, is not permitted unless authorised by Volkswagen AG. Volkswagen AG does not guarantee or accept any liability with respect to the correctness of information in this document. Copyright by Volkswagen AG.

- Press Piece - Multiple Use - VW431-
- Press Piece - Multiple Use - VW455-
- Press Piece - Multiple Use - VW510-
- Press Piece - 42mm - VW516-
- Press Piece - Multiple Use - VW519-
- Press Piece - Multiple Use - 30-11-

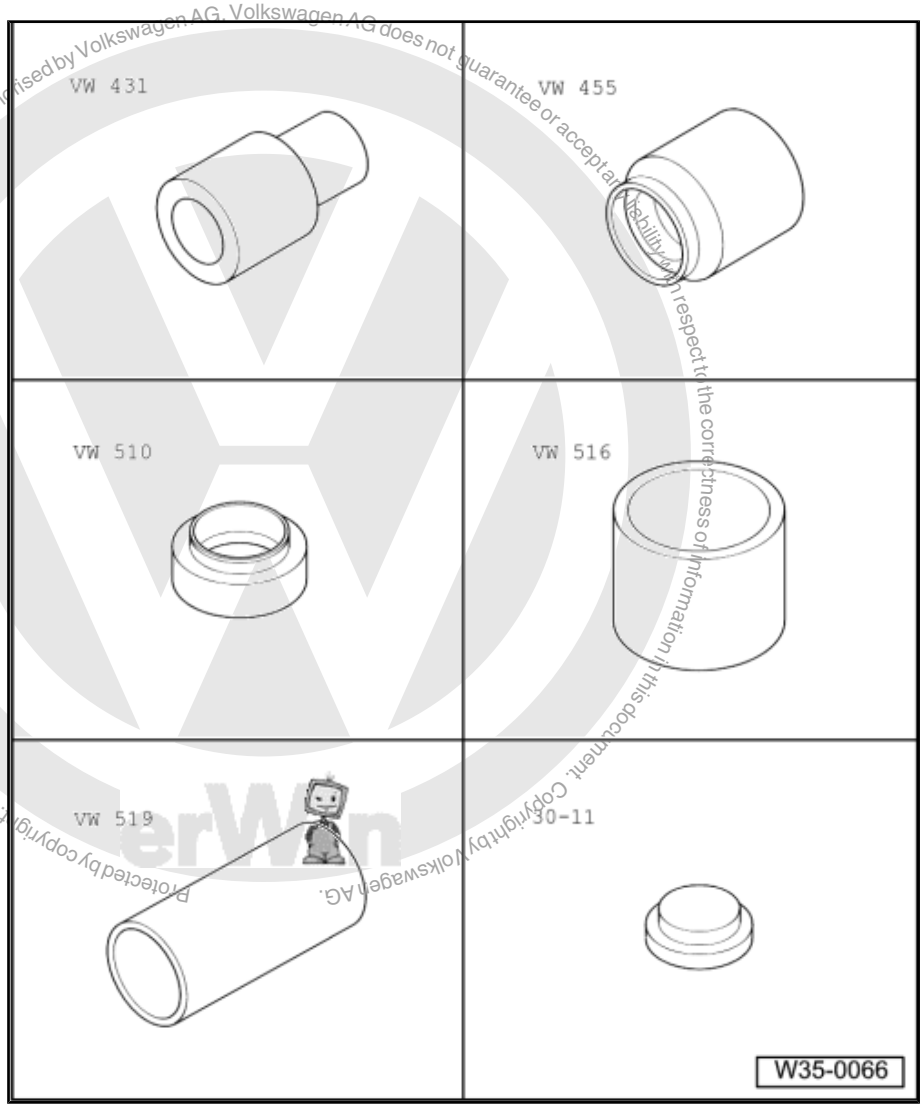

Protected by copyright. Copying for private or commercial purposes, in part or in whole, is not permitted unless authorised by Volkswagen AG. Volkswagen AG does not guarantee or accept any liability with respect to the correctness of information in this document. Copyright by Volkswagen AG.

- Holding Plate - VW309A-
- Slide Hammer - Press Plate - 2050-
- Torque Wrench 1331 5-50Nm - VAG1331-
- -1- Puller - Kukko Internal - 46-56mm - 21/7-
- -4- Puller - Kukko Counter-stay - 22/2-

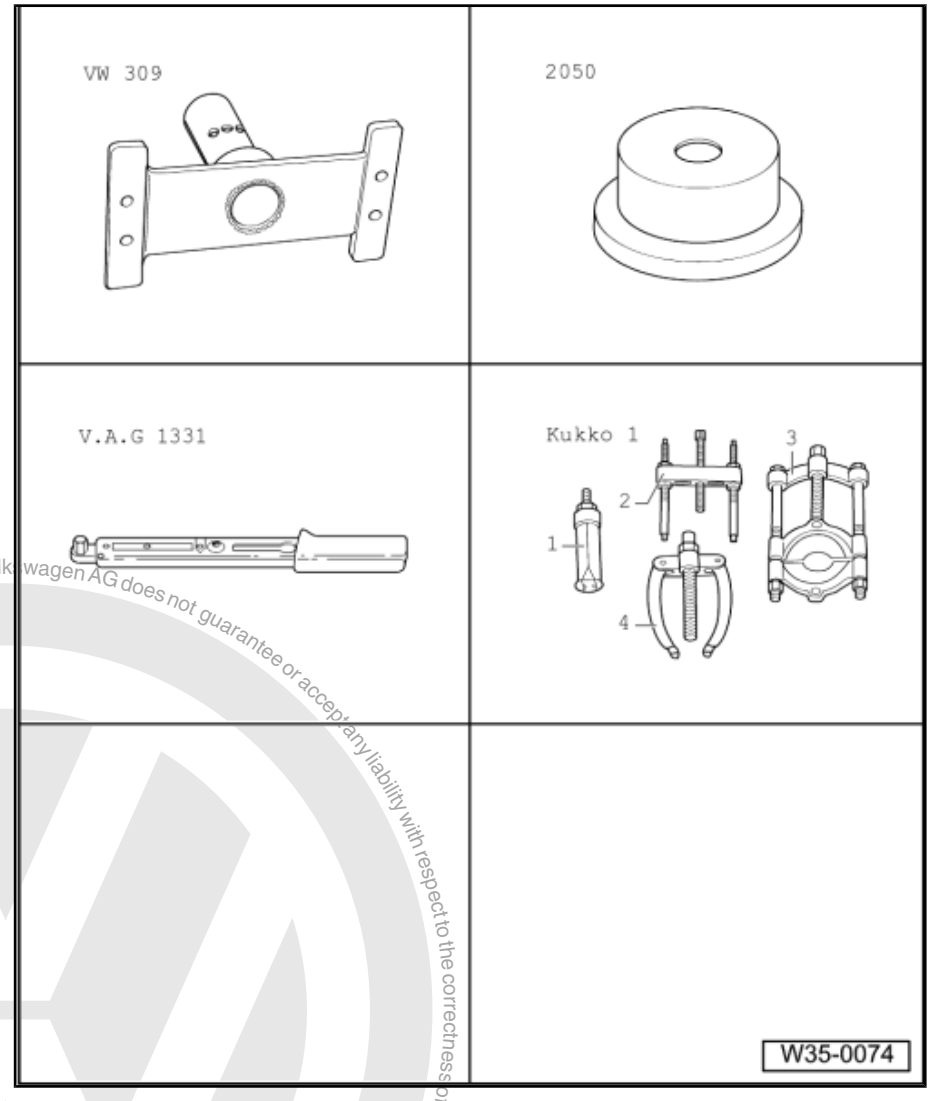

Protected by copyright. Copying for private or commercial purposes, in part or in whole, is not permitted unless authorised by Volkswagen AG. Volkswagen AG does not guarantee or accept any liability with respect to the correctness of information in this document. Copyright by Volkswagen AG.

- Press Piece - Multiple Use - 40-105-
- Bearing Installer - Multiple Use - 40-20-
- Slide Hammer - Press Plate - 2050-
- Press Piece - Reverse Gear Syncro - 3296-
- Puller - Taper Roller Bearing - VAG1582-
- Puller - Taper Roller Bearing - Adapter 4 - VAG1582/4-

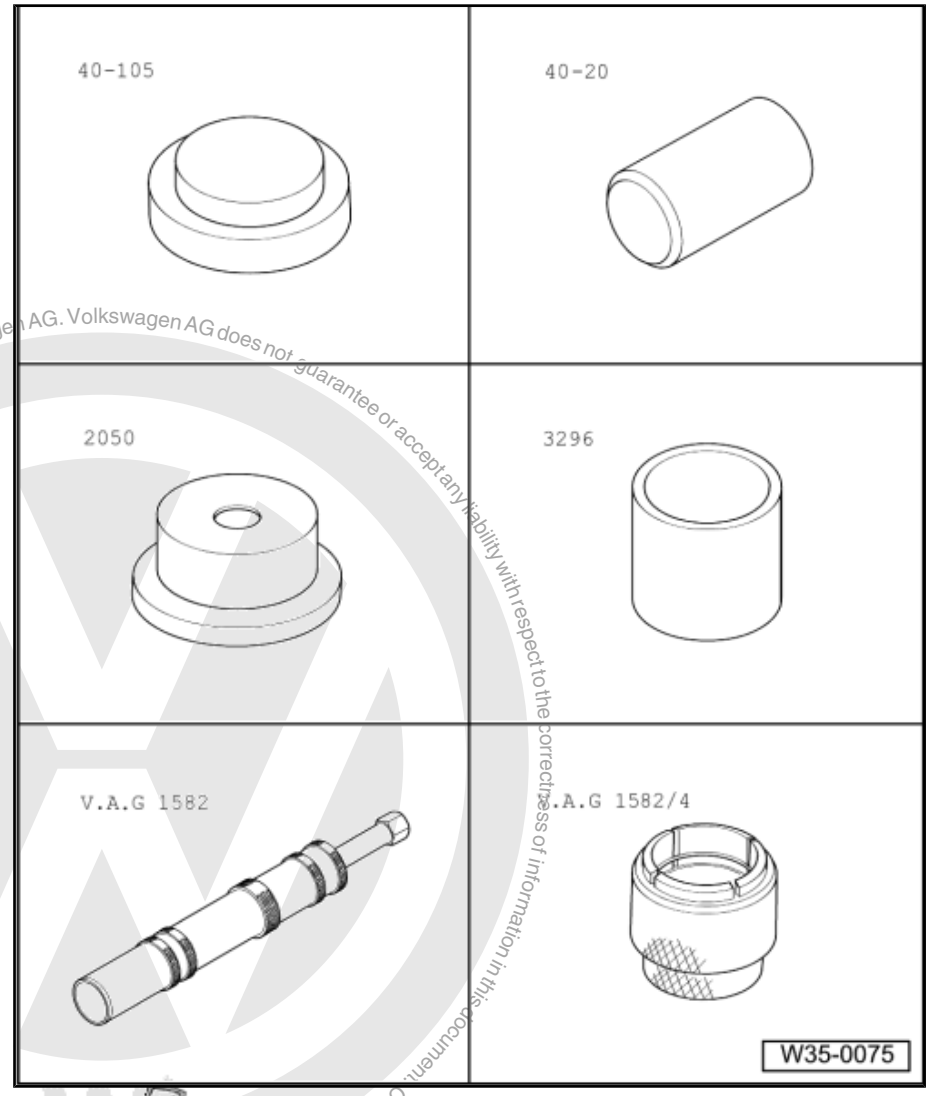

- Puller - Taper Roller Bearing - Adapter 7 - VAG1582/7-

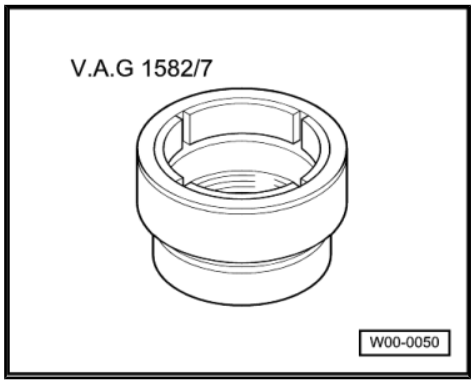

Protected by copyright. Copying for private or commercial purposes, in part or in whole, is not permitted unless authorised by Volkswagen AG. Volkswagen AG does not guarantee or accept any liability with respect to the correctness of information in this document. Copyright by Volkswagen AG.

- Inductive Heater - VAS6414-

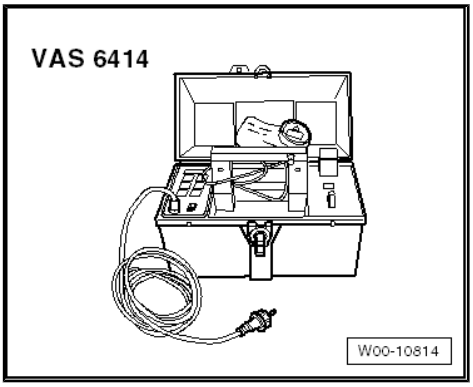

- Press Piece - Bushing - 50mm Diameter - VW432-

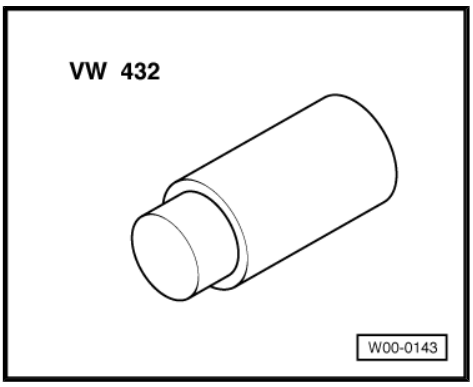

- -1- Puller - Kukko Internal - 46-56mm - 21/7-

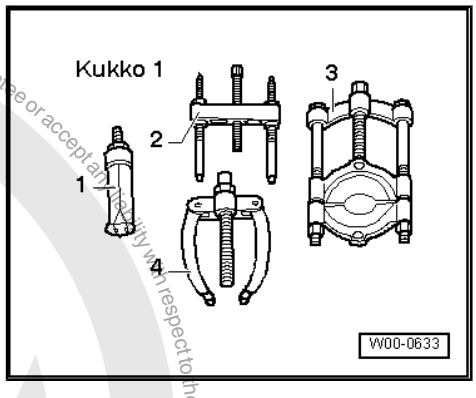

- -1- Puller - Kukko Internal - 56-70mm - 21/8-
- -2- Puller - Kukko Puller - 60-200mm Width, 250mm Length - 18/2-
- -3- Puller - Kukko Quick Action Separating Tool - 22-115mm - 17/2-
- -4- Puller - Kukko Counterstay - 22/2-
- -1- Puller - Kukko Internal - 28-37mm - 21/5-
- -3- Puller - Kukko Quick Action Separating Tool - 22-115mm - 17/2-
- -4- Puller - Kukko Counterstay - 22/2-

Protected by copyright. Copying for private or commercial purposes, in part or in whole, is not permitted unless authorised by Volkswagen AG. Volkswagen AG does not guarantee or accept any liability with respect to the correctness of information in this document. Copyright by Volkswagen AG.

- Locking Pin Driver - 30-505-

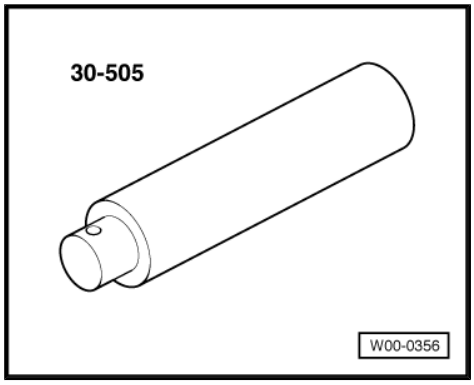

- Bearing Installer - Multiple Use - 32-111-

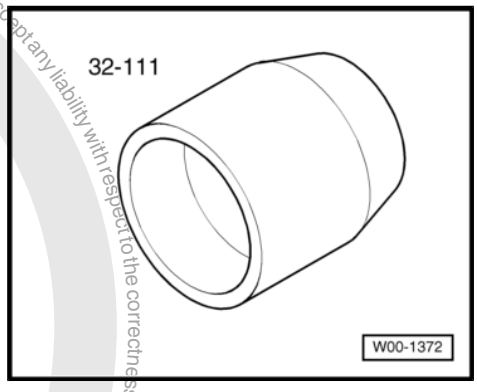

Protected by copyright. Copying for private or commercial purposes, in part or in whole, is not permitted unless authorised by Volkswagen AG. Volkswagen AG does not guarantee or accept any liability with respect to the correctness of information in this document. Copyright by Volkswagen AG.

39 – Final Drive and Differential

1 Flange Shaft Seals, Manual Transmission Installed, Replacing for FWD Vehicles

⇒ "1.1 Left Flange Shaft Seal, Replacing", page 369

⇒ "1.2 Right Flange Shaft Seal, Replacing", page 370

1.1 Left Flange Shaft Seal, Replacing

Special tools and workshop equipment required

- Slide Hammer Set - VW771-
- Slide Hammer Set - Hook - VW771/37-
- Seal Installer - Flange Shaft - 3305-
- Torque Wrench 1331 5-50Nm - VAG1331-
- Torque Wrench 1332 40-200Nm - VAG1332-
- Sealing Grease - G 052 128 A1-
- Shop Crane - Drip Tray - VAS6208-

Removing

– Remove the left wheel.

– Remove the noise insulation. Refer to ⇒ Body Exterior; Rep. Gr. 50 ; Noise Insulation .

– Remove the lower section of the left front wheel housing liner or the left front wheel housing liner. Refer to ⇒ Body Exterior; Rep. Gr. 66 ; Wheel Housing Liner .

– Remove the left drive axle. Refer to ⇒ Suspension, Wheels, Steering; Rep. Gr. 40 ; Drive Axles, Removing and Installing .

– Place the Drip Tray under the transmission.

– Remove the flange shaft bolt. To do this, install two bolts into the flange and counterhold the flange shaft using a pry bar.

– Remove the flange shaft with the pressure spring.

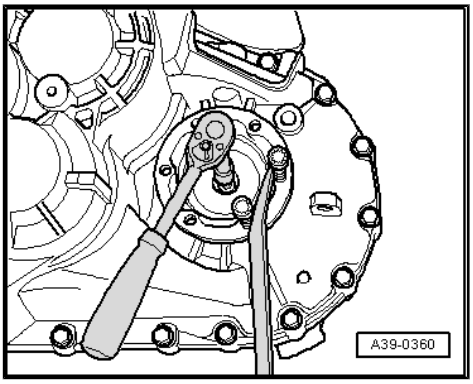

Protected by copyright. Copying for private or commercial purposes, in part or in whole, is not permitted unless authorised by Volkswagen AG. Volkswagen AG does not guarantee or accept any liability with respect to the correctness of information in this document. Copyright by Volkswagen AG.

– Remove flange shaft seal.

Installing

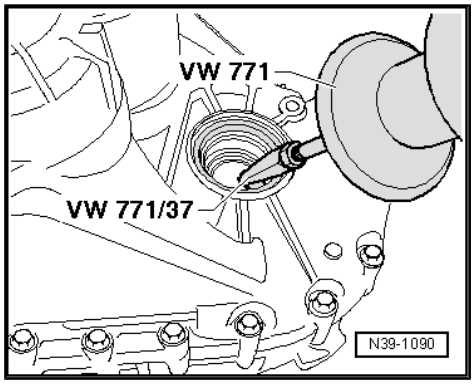

– Install the seal all the way in without tilting it.

– Fill the space between the sealing/dust lip halfway with Sealing Grease - G 052 128 A1- .

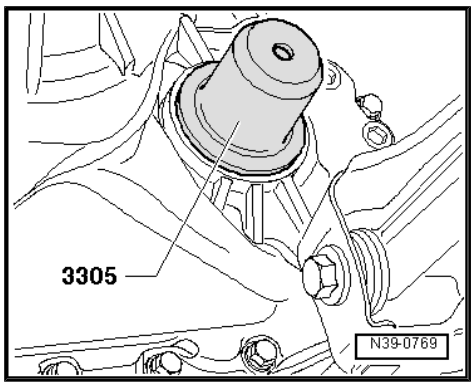

– Install the flange shaft.

– Install flange shaft with a screw and tighten to tightening specification -item 10- ⇒ Item 10 (page 395) .

– Install the left drive axle. Refer to ⇒ Suspension, Wheels, Steering; Rep. Gr. 40 ; Drive Axles, Removing and Installing .

– Install the lower section of the left front wheel housing liner or the left front wheel housing liner. Refer to ⇒ Body Exterior; Rep. Gr. 66 ; Wheel Housing Liner .

– Install the wheel. Refer to ⇒ Suspension, Wheels, Steering; Rep. Gr. 44 ; Wheel Installation Tightening Specifications .

– Check the transmission fluid level. Refer to ⇒ “8 Transmission Fluid, Checking”, page 192 .

– Install the noise insulation. Refer to ⇒ Body Exterior; Rep. Gr. 50 ; Noise Insulation .

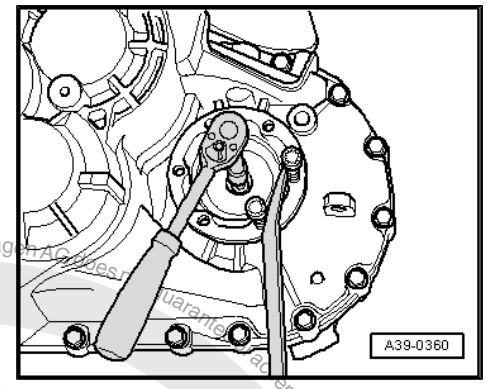

1.2 Right Flange Shaft Seal, Replacing

Special tools and workshop equipment required

- Seal Installer - Flange Shaft - 3305-
- Torque Wrench 1331 5-50Nm - VAG1331-
- Shop Crane - Drip Tray - VAS6208-
- Sealing Grease - G 052 128 A1-

Removing

– Remove the noise insulation. Refer to ⇒ Body Exterior; Rep. Gr. 50 ; Noise Insulation .

Protected by copyright. Copying for private or commercial purposes, in part or in whole, is not permitted unless authorised by Volkswagen AG. Volkswagen AG does not guarantee or accept any liability with respect to the correctness of information in this document. Copyright by Volkswagen AG.

– If equipped, remove the drive axle heat shield from the engine -arrows-.

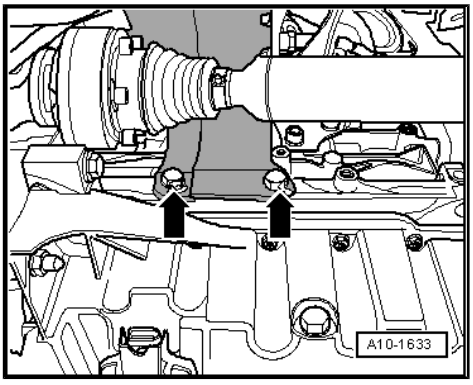

– Remove the right drive axle from the transmission flange shaft -A-.

– Secure drive axles using wire, do not damage protective coating when doing this.

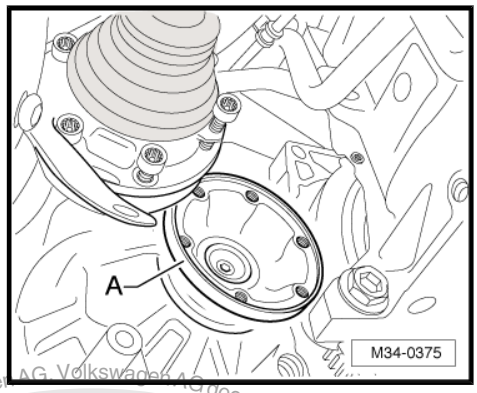

Note

♦ *On some engines, the drive axle cannot be tied up so that the flange shaft can be removed.*

♦ *Remove the drive axle. Refer to ⇒ Suspension, Wheels, Steering; Rep. Gr. 40 ; Drive Axles, Removing and Installing .*

– Place the Drip Tray for example Shop Crane - Drip Tray - VAS6208- under the transmission.

– Remove the flange shaft bolt. To do this, install two bolts into the flange and counterhold the flange shaft using a pry bar.

– Remove the flange shaft with the pressure spring (the left flange shaft is shown in the illustration).

– Pry out the sealing ring.

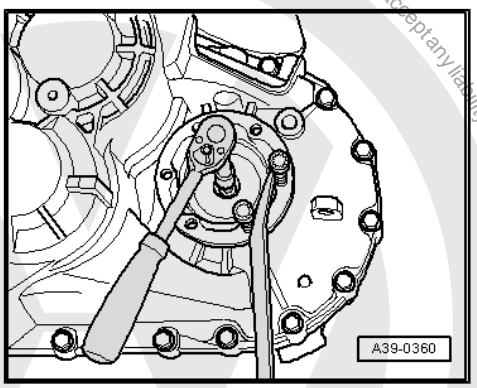

Installing

– Install the seal all the way in without tilting it.

– Fill the space between the sealing/dust lip halfway with Sealing Grease - G 052 128 A1- .

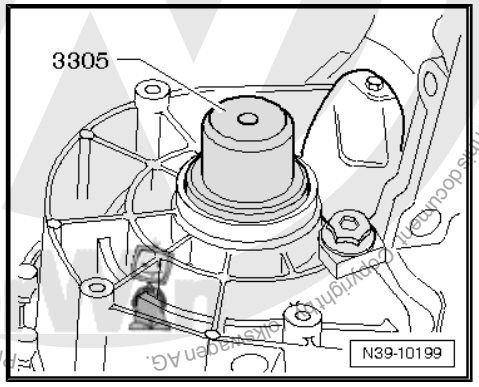

Protected by copyright. Copying for private or commercial purposes, in part or in whole, is not permitted unless authorised by Volkswagen AG. Volkswagen AG does not guarantee or accept any liability with respect to the correctness of information in this document.

– Secure the flange shaft -A- with a bolt and tighten it to the tightening specification -item 10- ⇒ Item 10 (page 395) .

– Attach the right drive axle to the flange shaft -A-. Refer to ⇒ Suspension, Wheels, Steering; Rep. Gr. 40 ; Drive Axles, Removing and Installing .

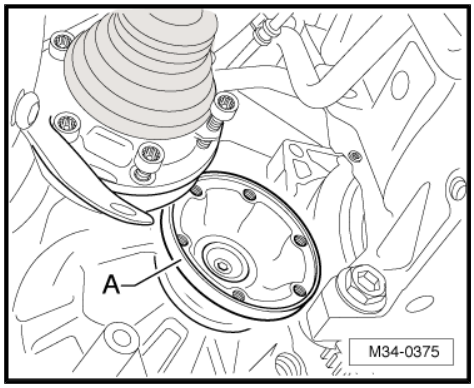

– Install the drive axle heat shield to the engine, if equipped and tighten the bolts -arrows- to the tightening specification. Refer to ⇒ Suspension, Wheels, Steering; Rep. Gr. 40 ; Drive Axles, Overview and Servicing; Drive Axle Heat Shield .

– Check the transmission fluid level. Refer to ⇒ “8 Transmission Fluid, Checking”, page 192.

– Install the noise insulation. Refer to ⇒ Body Exterior; Rep. Gr. 50 ; Noise Insulation .

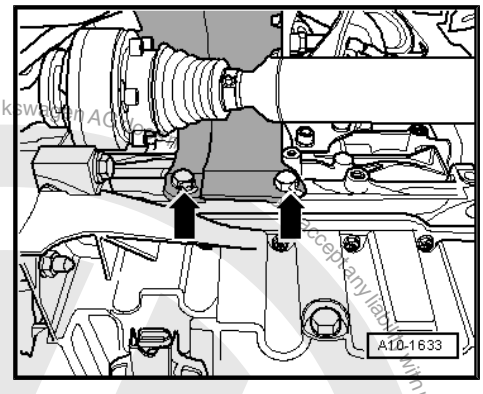

Protected by copyright. Copying for private or commercial purposes, in part or in whole, is not permitted unless authorised by Volkswagen AG. Volkswagen AG does not accept any liability with respect to the correctness of information in this document. Copyright by Volkswagen AG.

2 Flange Shaft Seals and Bevel Box, Replacing for AWD Vehicles (Manual Transmission already Installed)

⇒ “2.1 Left Flange Shaft Seal, Replacing”, page 373

⇒ “2.2 Right Flange Shaft Seal, Replacing”, page 373

⇒ “2.3 Bevel Box Seal, Replacing, with Manual Transmission Installed”, page 375

2.1 Left Flange Shaft Seal, Replacing

Replacing the seal on the left flange shaft on AWD and FWD vehicles is identical. Refer to
⇒ “1.1 Left Flange Shaft Seal, Replacing”, page 369 .

2.2 Right Flange Shaft Seal, Replacing

Special tools and workshop equipment required

- Puller - Flanged Shaft - T10037-
- Seal Installer - Flange Shaft - T10049-
- Socket And Extended Bit - T10107-
- or Socket And Extended Bit - T10107A-
- Torque Wrench 1331 5-50Nm - VAG1331-
- Sealing Grease - G 052 128 A1-
- Shop Crane - Drip Tray - VAS6208-

Removing

The right drive axle must be removed later in the procedure.

– With the vehicle still standing on its wheels, loosen the right front collar bolt -arrow- a maximum 90°, otherwise the wheel bearing will get damaged. Refer to ⇒ Suspension, Wheels, Steering; Rep. Gr. 40 ; Drive Axles, Removing and Installing .

– Remove the right front wheel.

– Remove the noise insulation under the engine/transmission, if equipped. Refer to ⇒ Body Exterior; Rep. Gr. 50 ; Noise Insulation .

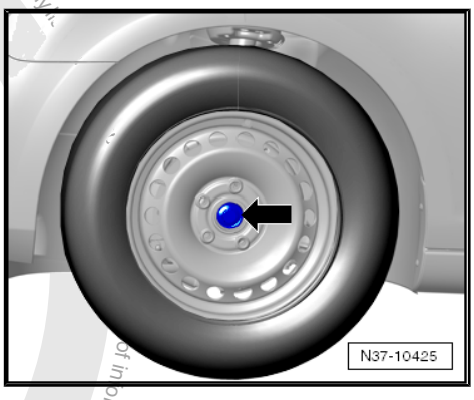

– Remove the drive axle heat shield from the bevel box -arrows-.

– Remove the right drive axle. Refer to ⇒ Suspension, Wheels, Steering; Rep. Gr. 40 ; Drive Axles, Removing and Installing .

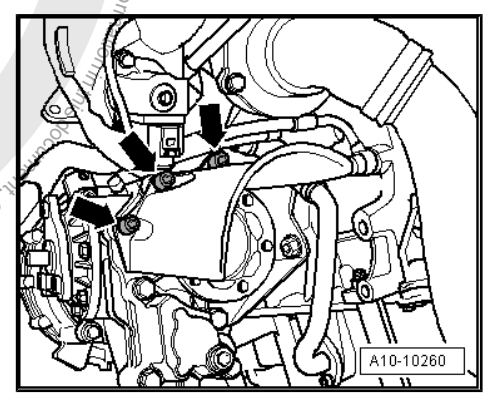

Protected by copyright. Copying for private or commercial purposes, in part or in whole, is not permitted unless authorised by Volkswagen AG. Volkswagen AG does not guarantee or accept any liability with respect to the correctness of information in this document. Copyright by Volkswagen AG.

Vehicles with A Particulate Filter

– Remove the nuts -1- and -2- and then remove the particulate filter bracket.

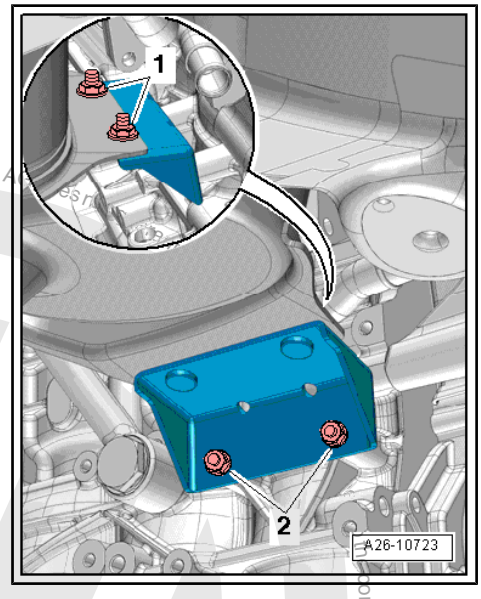

Continuation for All

– Place the drip tray under the transmission.

– Remove the right flange shaft bolt -arrow 1- with the Socket And Extended Bit - T10107A- and install two bolts in the flange and counterhold the flange shaft with the pry bar.

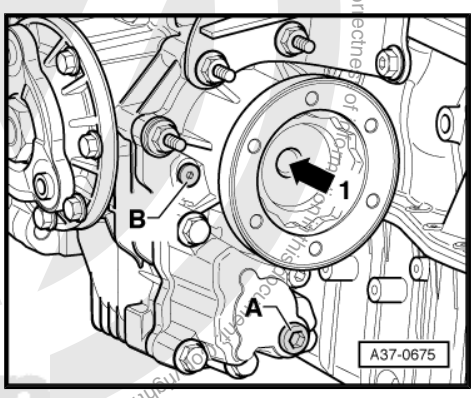

– Tighten the Puller - Flanged Shaft - T10037- on right flange shaft.

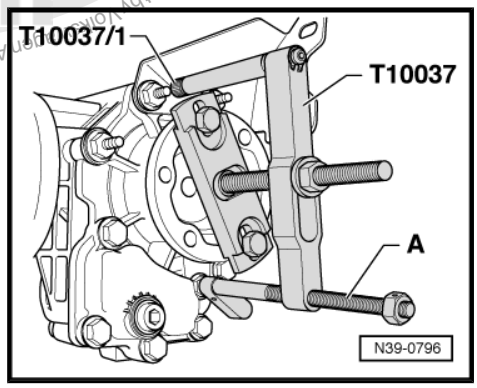

Note

To remove right flange shaft, use Seal Installer - Crankshaft - T10037- to avoid damaging the bearing on flange shaft.

– Place a spacer (for example, Press Piece - Bushing - VW434-) between the transmission support and the Stub Shaft counterhold Tool - Knurled Nut - T10371/1- .

– Align the Puller - Flanged Shaft - T10037- parallel to the flange using the Spindle -A-.

– Install the right flange shaft.

– Pry the seal out of the flange shaft with a lever.

Installing

– Lightly oil the new gasket on the outer edge.

Protected by copyright. Copying for private or commercial purposes, in part or in whole, is not permitted unless authorised by Volkswagen AG. Volkswagen AG

– Install the seal all the way in without tilting it.

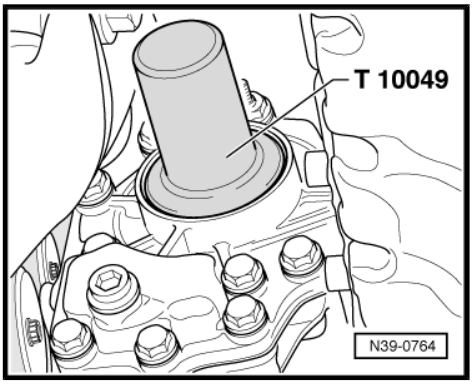

– Fill the space between the sealing/dust lip -arrow- halfway with Sealing Grease - G 052 128 A1- .

– Carefully drive in the left flange shaft. While doing so turn the flange shaft so that the bearing does not get damaged.

– Install flange shaft with a screw and tighten to tightening specification -item 13- ⇒ Item 13 (page 401) .

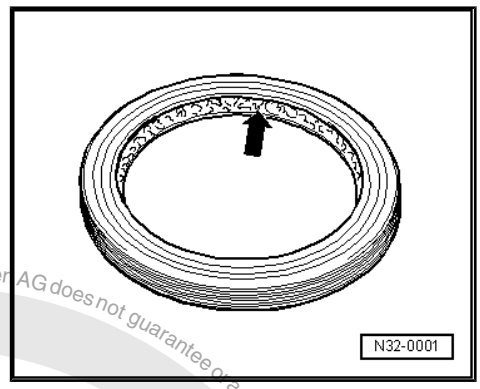

Install in reverse order of removal.

Vehicles with A Particulate Filter

– Install the particulate filter bracket. Refer to ⇒ Rep. Gr. 26 .

Continuation for All

– Install the right drive axle. Refer to ⇒ Suspension, Wheels, Steering; Rep. Gr. 40 ; Drive Axles, Removing and Installing .

– Remove the right drive axle heat shield -arrows-. Refer to ⇒ Suspension, Wheels, Steering; Rep. Gr. 40 ; Drive Axles, Overview and Servicing; Drive Axle Heat Shield .

– Check the gear oil in the bevel box. Refer to ⇒ “10 Axle Oil in Bevel Box, Checking or Adding”, page 218 .

– Check transmission fluid level inside the manual transmission. Refer to ⇒ “8 Transmission Fluid, Checking”, page 192 .

– Install the noise insulation. Refer to ⇒ Body Exterior; Rep. Gr. 50 ; Noise Insulation .

– Install the right front wheel. Refer to ⇒ Suspension, Wheels, Steering; Rep. Gr. 44 ; Wheel Installation Tightening Specifications .

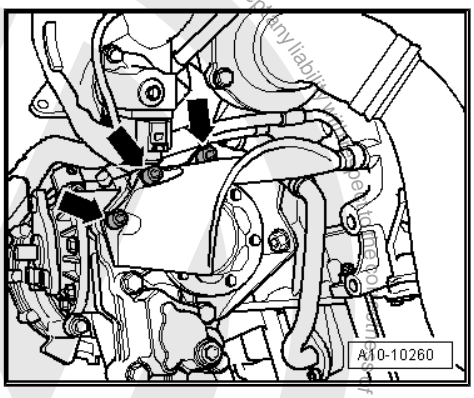

2.3 Bevel Box Seal, Replacing, with Manual Transmission Installed

Note

The seal, located between the manual transmission and the bevel box, seals the manual transmission.

Special tools and workshop equipment required

- Puller - Crankshaft/Power Steering Seal - 2 - T20143/2-
- Shop Crane - Drip Tray - VAS6208-
- Seal Installer - Bevel Box - T10243-

– Remove the bevel box. Refer to ⇒ “9 Bevel Box, Removing and Installing”, page 193 .

Protected by copyright. Copying for private or commercial purposes, part of or whole, is not permitted unless authorised by Volkswagen AG. Volkswagen AG does not guarantee or accept any liability for any use of information in this document. Copyright by Volkswagen AG.

– Place the Drip Tray for example Shop Crane - Drip Tray - VAS6208- under the transmission.

– Pry out the bevel box seal using the Puller - Crankshaft/Power Steering Seal - 2 - T20143/2- or Puller - Seal Lever - VW681- .

– Coat the outer circumference of the new seal with transmission fluid.

– Fill the space between the sealing/dust lip -arrow- halfway with Sealing Grease - G 052 128 A1- .

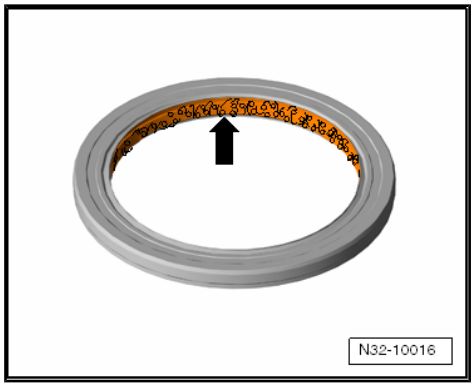

– Install the seal all the way without tilting it.

– Install the bevel box. Refer to
⇒ “9 Bevel Box, Removing and Installing”, page 193 .

– Check the gear oil in the bevel box. Refer to
⇒ “10 Axle Oil in Bevel Box, Checking or Adding”, page 218 .

– Check transmission fluid level inside the manual transmission. Refer to ⇒ “8 Transmission Fluid, Checking”, page 192 .

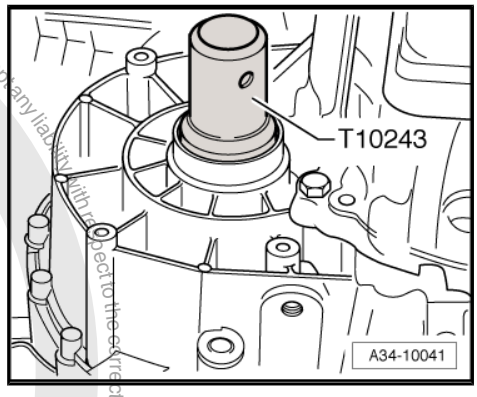

Protected by copyright. Copying for private or commercial purposes, in part or in whole is not permitted unless authorised by Volkswagen AG. Volkswagen AG does not guarantee or accept any liability with respect to the correctness of information in this document. Copyright by Volkswagen AG.

3 Overview - Seals, Flange Shaft Bearing and Output Flange Bearing inside the Bevel Box

⇒ “3.1 Bevel Box, Removing and Installing (Manual Transmission Removed)”, page 379

⇒ “3.2 Gasket on Bevel Box between Manual Transmission and Bevel Box, Replacing”, page 380

⇒ “3.3 Bevel Box Output Flange Seal, Replacing (Bevel Box Removed)”, page 381

⇒ “3.4 Output Flange, Replacing and Selecting New Shim for Output Flange, Bevel Box Removed”, page 387

⇒ “3.5 Needle Bearing (polygon bearing) on Right Flange Shaft and Seal on Right Flange Shaft, Replacing”, page 387

Commercial purposes, in part or in whole, is not permitted unless authorized by Volkswagen AG. Volkswagen AG does not guarantee or accept any liability with respect to the correctness

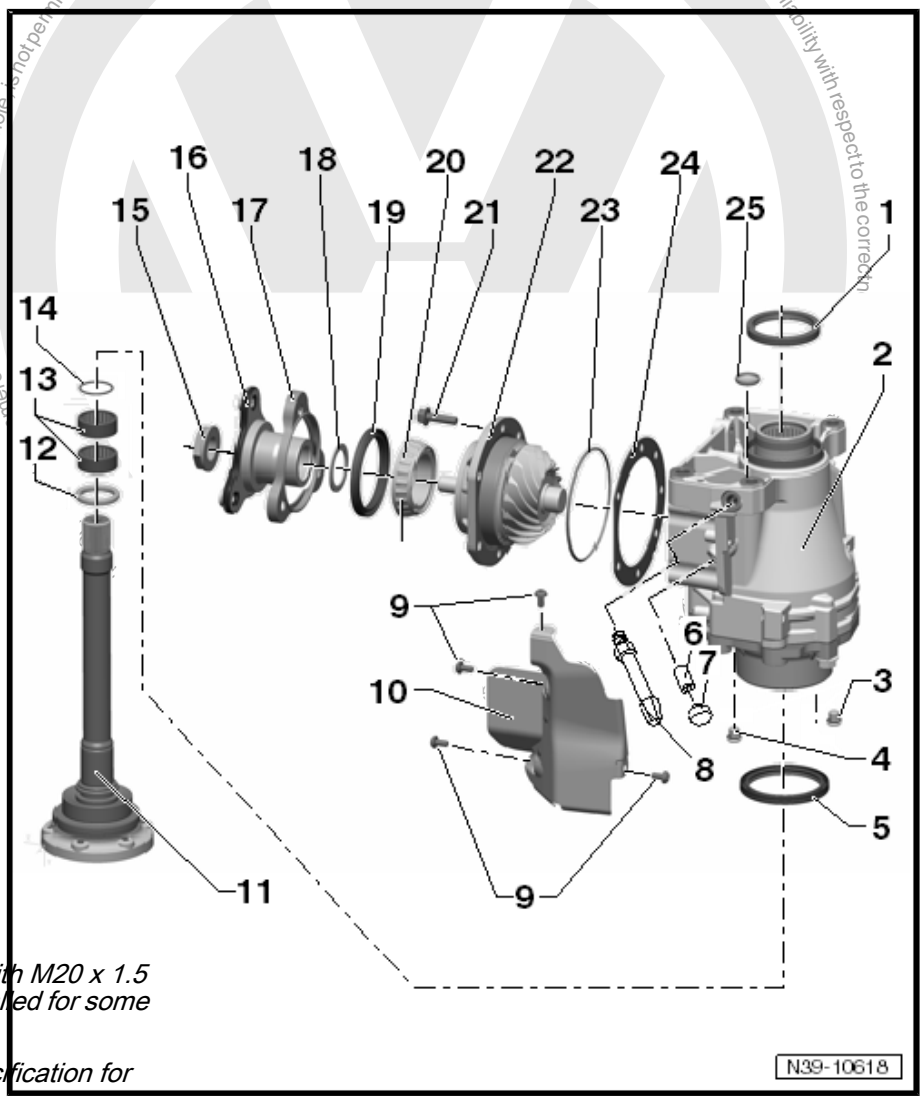

1 - Seal

- ❑ Between bevel box and manual transmission
- ❑ Replace with bevel box removed. Refer to ⇒ “3.2 Gasket on Bevel Box between Manual Transmission and Bevel Box, Replacing”, page 380

2 - Bevel Box

- ❑ Removing and installing with transmission installed. Refer to ⇒ “9 Bevel Box, Removing and Installing”, page 193 .
- ❑ Removing and installing with transmission removed. Refer to ⇒ “3.1 Bevel Box, Removing and Installing (Manual Transmission Removed)”, page 379 .

3 - Oil Drain Plug

- ❑ 15 Nm
- ❑ Replace after removing
- ❑ With permanent seal

Note

- *A fluid drain plug with M20 x 1.5 thread may be installed for some bevel boxes.*
- *The tightening specification for this plug is 60 Nm.*

4 - Oil Filler Plug

- ❑ 15 Nm
- ❑ Replace after removing
- ❑ With permanent seal

5 - Seal

- ❑ For the right flange shaft
- ❑ Replace with manual transmission installed with bevel box. Refer to ⇒ “2.2 Right Flange Shaft Seal, Replacing”, page 373 .

6 - Bleed Pipe

- ❑ For bleeding the bevel box
- ❑ Press it in until it stops

7 - Cap

- ❑ For bleeding the bevel box

8 - Vent Pipe

- ❑ 10 Nm
- ❑ Bevel box venting approximately through 12/2005
- ❑ Allocate the parts according to the Parts Catalog

9 - Bolt

- ❑ 5 Nm

10 - Heat Shield

- ❑ Not equipped for all bevel boxes
- ❑ The contour may be different from the illustration
- ❑ Allocate the parts according to the Parts Catalog

11 - Right Flange Shaft

- ❑ Removing and installing. Refer to ⇒ “2.2 Right Flange Shaft Seal, Replacing”, page 373 .

12 - Seal

- ❑ remove to replace needle bearing (polygon bearing -item 13- ⇒ Item 13 (page 378))

13 - Needle Bearing (Polygon Bearing)

- ❑ Replacing. Refer to ⇒ “3.5 Needle Bearing (polygon bearing) on Right Flange Shaft and Seal on Right Flange Shaft, Replacing”, page 387 .

14 - Circlip

- ❑ Replace after removing
- ❑ For the needle bearing (polygon bearing)
- ❑ Insert into the surrounding right flange shaft groove

15 - Hex Nut

- ❑ 480 Nm
- ❑ Removing. Refer to ⇒ Fig. ““Unscrew Hex Nut for Output Flange.”“ , page 383 .
- ❑ Install with Locking Compound - D 000 600- .
- ❑ Installing. Refer to ⇒ Fig. ““Coat Threads of the New Hex Head Nut with Locking Compound -D 000 600- .”“ , page 387 .

16 - Output Flange

- ❑ Removing and installing with bevel box removed. Refer to ⇒ “3.3 Bevel Box Output Flange Seal, Replacing (Bevel Box Removed)”, page 381

17 - Cap

- ❑ Lock with the output flange

18 - Shim

- ❑ Determining the thickness when replacing the output flange. Refer to ⇒ “3.4 Output Flange, Replacing and Selecting New Shim for Output Flange, Bevel Box Removed”, page 387

19 - Seal

- ❑ For output flange

Copyright by Volkswagen AG. Volkswagen AG does not guarantee or accept any liability with respect to the correctness of information in this document. Copyright by Volkswagen AG. Volkswagen AG does not permit unauthorised use or commercial purposes, in whole or in part, or publication or copying of this document.

- ❑ Replace with bevel box removed. Refer to
  ⇒ "3.3 Bevel Box Output Flange Seal, Replacing (Bevel Box Removed)", page 381

20 - Inner Race / Tapered Roller Bearing

- ❑ Component is not a replacement part

21 - Bolt

- ❑ 25 Nm

22 - Pinion Housing

- ❑ With shaft bevel gear and outer race/tapered roller bearing
- ❑ Components are not replacement parts
- ❑ Carefully pry out from side to side
- ❑ Note the fastening holes; the pinion housing only fits in one position

23 - O-Ring

- ❑ To replace, remove the bolts -item 21- ⇒ Item 21 (page 379) and carefully pry the drive pinion housing out at the tabs protruding all the way around.
- ❑ Do not remove the hex nut -item 15- ⇒ Item 15 (page 378) and output flange -item 16- ⇒ Item 16 (page 378) .

24 - Shim

- ❑ Component is not a replacement part
- ❑ Note the bevel box fastening holes; the shim only fits in one position

25 - Cap

- ❑ Drive in until stop using the Holding Fixture - Spacers - VW540/1B-

3.1 Bevel Box, Removing and Installing (Manual Transmission Removed)

Special tools and workshop equipment required

- ♦ Socket And Extended Bit - T10107A-
- ♦ Shop Crane - Drip Tray - VAS6208-

Note

Secure the transmission on the assembly stand. Refer to *⇒ "7 Transmission, Securing in Engine/Transmission Holder", page 191* .

Remove the Bevel Box from the Manual Transmission as Follows:

- – Place a Workshop Crane Drip Tray for example Shop Crane - Drip Tray - VAS6208- underneath.
- – Remove right flange shaft countersunk screw with Socket And Extended Bit - T10107- or Socket And Extended Bit - T10107A- .
- – Remove the four bolts -arrows- (only three bolts are shown in the illustration) that attach the bevel box to the manual transmission.
- – Carefully press bevel box off manual transmission while protecting it against falling through.

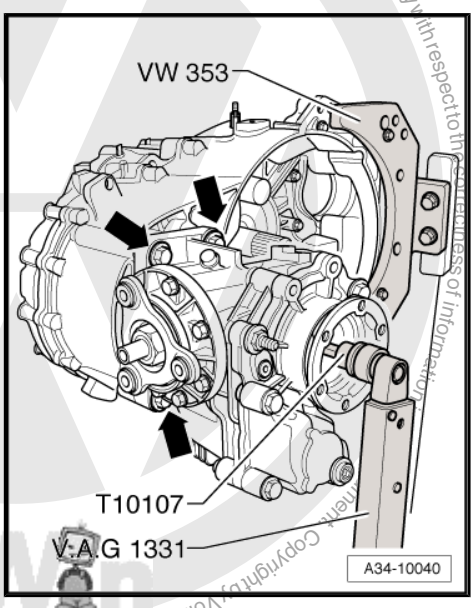

Protected by copyright. Copyright by Volkswagen AG. Volkswagen AG does not guarantee or accept any liability with respect to the correctness of information in this document. Copyright by Volkswagen AG.

Attach the Bevel Box to the Manual Transmission as Follows:

– Slide on bevel box completely on manual transmission, while doing this, join splines of input shaft/bevel box centrally with differential.

– Line up the splines on the right flange shaft with the differential bevel gear. Turn the flange shaft if necessary.

• With proper tooth position and central guiding, bevel box slips up to stop against manual transmission.

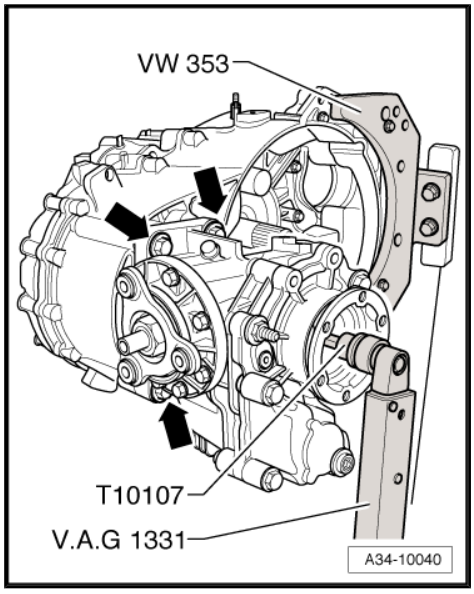

> ⚠ **Caution**
>
> ***The bevel box housing may become damaged.***
>
> ♦ ***Do not pull bevel box with mounting bolts against manual transmission, otherwise bevel box is canted and mounting eyelets can break off.***

– Remove the four bolts -arrows- (only three bolts are shown in the illustration) that attach the bevel box to the manual transmission -item 17- ⇒ Item 17 (page 235) for the tightening specification.

– Tighten the right flange shaft countersunk bolt with Socket And Extended Bit - T10107- or Socket And Extended Bit - T10107A- -item 13- ⇒ Item 13 (page 401) for the tightening specification.

3.2 Gasket on Bevel Box between Manual Transmission and Bevel Box, Replacing

Special tools and workshop equipment required

♦ Puller - Crankshaft/Power Steering Seal - T20143-

♦ Seal Installer - Bevel Box - T10298-

– Remove the bevel box. Refer to ⇒ "9 Bevel Box, Removing and Installing", page 193 .

– Remove the gasket using the Puller - Crankshaft/Power Steering Seal - 1 - T20143/1- or Puller - Crankshaft/Power Steering Seal - 2 - T20143/2- .

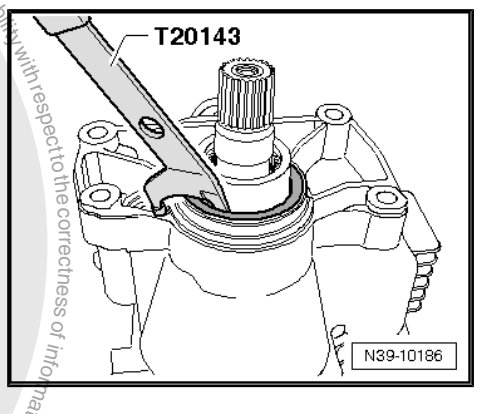

Protected by copyright. Copying for private or commercial purposes, in part or in whole, is not permitted unless authorised by Volkswagen AG. Volkswagen AG does not guarantee or accept any liability with respect to the correctness of information in this document. Copyright by Volkswagen AG.

– Coat the outer circumference of the new seal with transmission fluid.

– Fill the space between the sealing/dust lip -arrow- halfway with Sealing Grease - G 052 128 A1- .

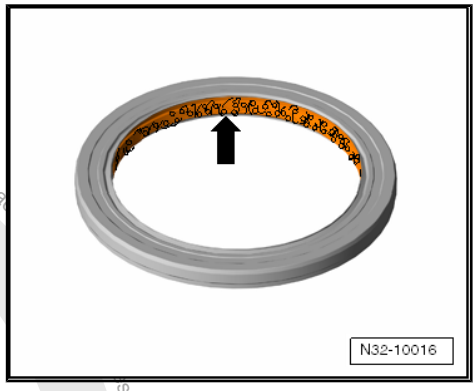

– Drive the gasket all the way in using the Seal Installer - Bevel Box - T10298- . Do not tilt it while doing so.

– Install the bevel box. Refer to
⇒ "9 Bevel Box, Removing and Installing", page 193 .

– Check the gear oil in the bevel box. Refer to
⇒ "10 Axle Oil in Bevel Box, Checking or Adding", page 218 .

– Check transmission fluid level inside the manual transmission. Refer to ⇒ "8 Transmission Fluid, Checking", page 192 .

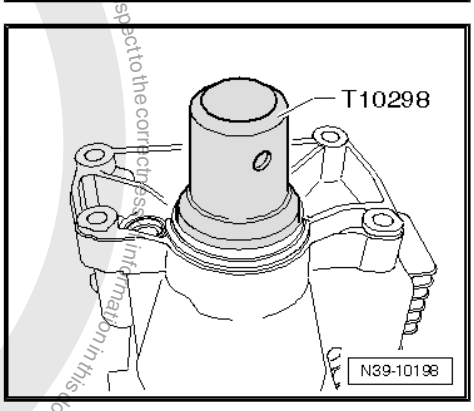

3.3 Bevel Box Output Flange Seal, Replacing (Bevel Box Removed)

Special tools and workshop equipment required

- Holding Fixture - VW313-
- Press Piece - 42mm - VW516-
- Press Piece - Multiple Use - 40-105-
- Seal Installer - Flange Shaft - T10049-
- Gearbox Support - T10108-
- Counter Holder - T10108/1-
- Puller - Taper Roller Bearing - VAG1582- with a short sleeve
- Seal is located in the pinion housing. Refer to
⇒ Fig. ""Output Flange Seal in Pinion Housing, Removing and Installing"", page 384 . Puller - Taper Roller Bearing - Adapter 6 - VAG1582/6- or Puller - Taper Roller Bearing - Adapter 6A - VAG1582/6A-
- -1- Puller - Kukko 2-Arm - 70-180mm - 20/10-
- Seal is located on the output flange. Refer to
⇒ Fig. ""Output Flange Seal -arrow- Removing and Installing:"", page 385 . Puller - Taper Roller Bearing - Adapter 13 - VAG1582/13-
- Continuation for All
- Torque Wrench 1601 - VAG1601-
- Three-Arm Puller - 45–2-
- The seal is located on the output flange
⇒ Fig. ""Output Flange Seal -arrow- Removing and Installing:"", page 385
- Press Piece - Multiple Use - VW412-

Protected by copyright. Copyright by Volkswagen AG. Copyright by Volkswagen AG. Volkswagen AG does not guarantee or accept any liability with respect to the correctness of information in this document. Copyright by Volkswagen AG. Any use or publication, in whole or in part, is not permitted unless authorised by Volkswagen AG. Any use for private or commercial purposes, in part or in whole, is not permitted unless authorised by Volkswagen AG.

- Press Piece - Multiple Use - VW454-
- Press Piece - Multiple Use - VW455-
- Press Plate - VW401-
- Two M8 x 30 mm stud bolts or Guide Pins - M8 - T10273-
- Removal Device Pin 2 - VW460/2-
- Sealing Grease - G 052 128 A1-
- Locking Compound - D 000 600-
- Only for seal in pinion housing. Refer to ⇒ Fig. ""Output Flange Seal in Pinion Housing, Removing and Installing"" , page 384
- Slide Hammer Set - VW771-
- Only for seal in pinion housing. Refer to ⇒ Fig. ""Output Flange Seal in Pinion Housing, Removing and Installing"" , page 384
- Slide Hammer Set - Hook - VW771/37-
- Two M 10 x 30 bolts
- Four M 12 x 10 nuts

Note

- *Bevel box output flange seal can only be replaced with bevel box removed.*
- *Inner race/tapered roller bearing is located in the output flange bevel box.*
- *This is removed later in the procedure.*
- *Do not replace the tapered roller bearing for the output flange bevel box and the shim!*

– Remove the bevel box. Refer to ⇒ "9 Bevel Box, Removing and Installing", page 193 .

– Mount the bevel box on the hole marked with the number -4- -arrow- in the Gearbox Support - T10108- .

A - Insert the M 12 x 10 nut (quantity: 4) between bevel box and Transmission Holder .

– Then align bevel box to the remaining three holes and secure.

– Place a drip tray underneath.

– Drain the gear oil out of the bevel box.

– Install two M 10 x 30 bolts -arrows- to stop the output flange for the bevel box with the Gearbox Support - Stop Plate - T10108/1- .

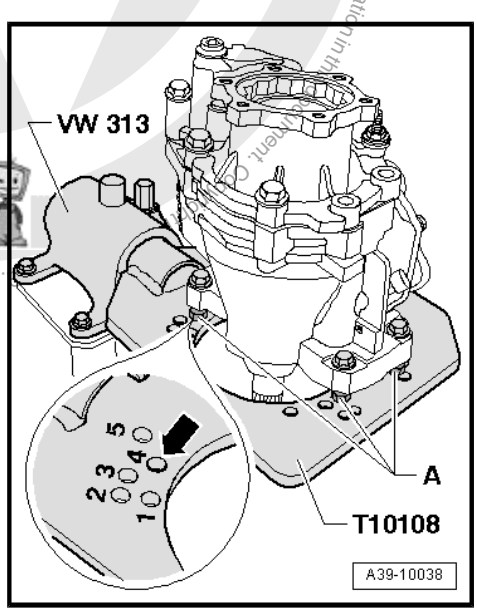

Protected by copyright. Copying for private or commercial purposes, in part or in whole, is not permitted unless authorised by Volkswagen AG. Volkswagen AG does not guarantee or accept any liability with respect to the correctness of information in this document. Copyright by Volkswagen AG.

Protected by copyright. Copying for private or commercial purposes, in part or in whole, is not permitted unless authorised by Volkswagen AG. Volkswagen AG does not guarantee or accept any liability with respect to the correctness of information in this copy.

Unscrew Hex Nut for Output Flange.

A - 36 mm Socket for 3/4 Inch Drive

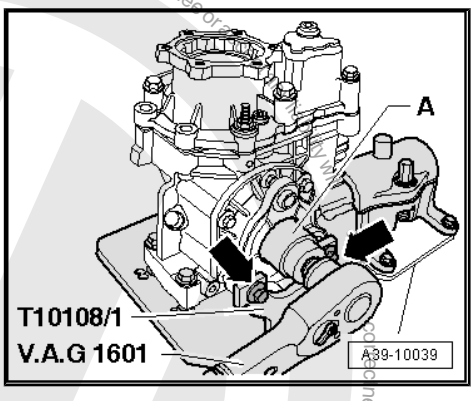

– Pivot the bevel box so that the output flange faces upward.
– Remove the output flange and the inner race/tapered roller bearing from the bevel box shaft bevel gear.

A - Puller Three-Arm , for example Three-Arm Puller - 45-2-

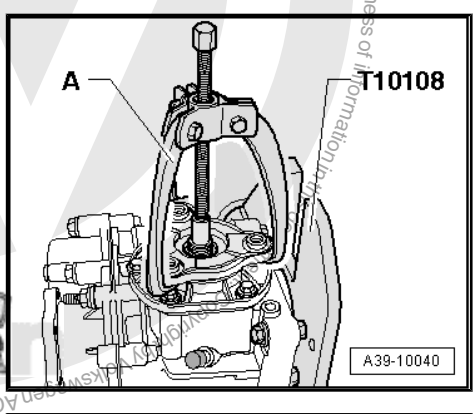

– Please note the different installation locations for the output flange seals:

The Output Flange Seal -arrow- is Inside the Pinion Housing.

Output flange seal in pinion housing, removing and installing. Refer to
⇒ Fig. ""Output Flange Seal in Pinion Housing, Removing and Installing"" , page 384 .

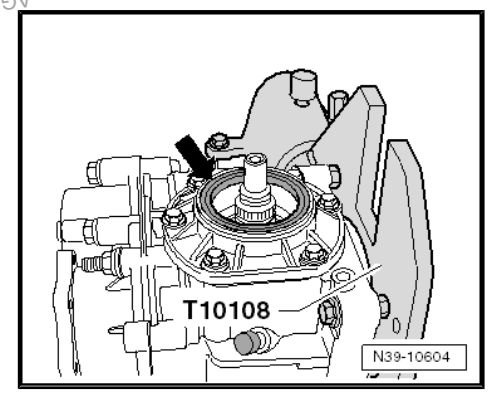

The Seal -arrow- is Located on the Output Flange.

Output flange seal, removing and installing. Refer to
⇒ Fig. ""Output Flange Seal -arrow- Removing and Installing:"" , page 385 .

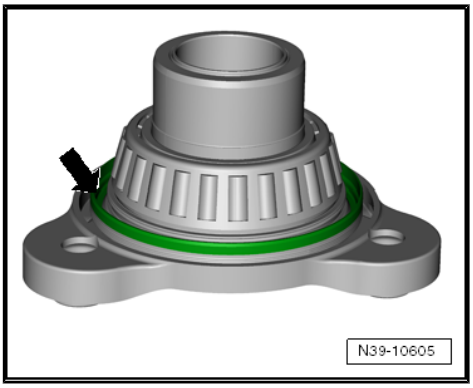

Output Flange Seal in Pinion Housing, Removing and Installing

Seal, Removing

– Remove output shaft seal -A-.

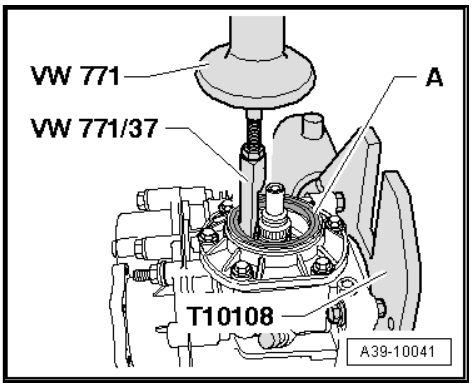

- The inner race/tapered roller bearing must be removed from the output flange:

– Place the Press Piece - Multiple Use - 40-105- on the output flange.

– Remove the inner race/tapered roller bearing from output flange with the Tapered Roller Bearing Puller - VAG1582- .

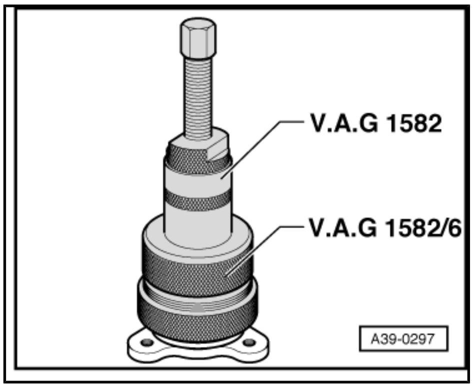

Note

Instead of the Puller - Taper Roller Bearing - Adapter 6 - VAG1582/6- , the Puller - Taper Roller Bearing - Adapter 6A - VAG1582/6A- can be used.

Install Seal and Output Flange

– Cover pinion housing with a lint-free cloth.

– Clean any remaining locking fluid from the thread on the shaft bevel gear.

- If the shim -2- is removed during the removal of the output flange, place it back in the pinion housing.
- This will maintain the bearing pre-load on the shaft bevel gear -1- inside the pinion housing.

– Insert the previous inner race/tapered roller bearing -3- in the outer race/tapered roller bearing into the bevel box.

– Lightly lubricate the outer circumference of the new output flange sealing ring -4-.

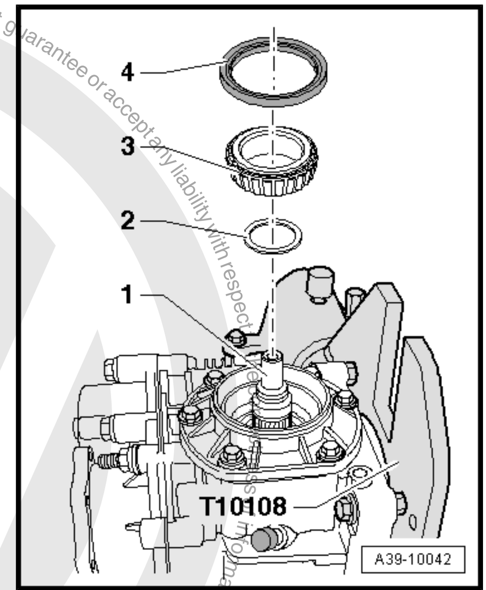

– Drive in the new seal using Seal Installer - Flange Shaft - T10049- .

- The seal must be flush with the upper edge of the housing.

– Fill the space between the sealing/dust lip halfway with Sealing Grease - G 052 128 A1- .

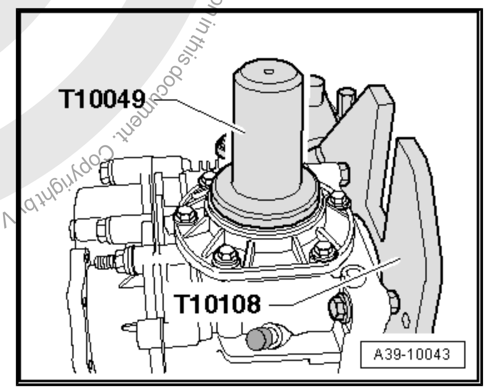

Protected by copyright. Copying for private or commercial purposes, in part or in whole, is not permitted unless authorised by Volkswagen AG. Volkswagen AG does not guarantee or accept any liability with respect to the correctness of information in this document. Copyright by Volkswagen AG.

– Install the output flange using the Two-Arm Puller -A-.

A - Two-Arm Puller , for example Puller - Kukko 2-Arm - 70-180mm - 20/10-

Note the following:

- Do not use a damaged extractor hook.
- The output flange may not be on edge when pulling out the shaft bevel gear.
- Mount the hooks on the bottom of the pinion housing.
- Tension the removal hook with the Two-Arm Puller -arrows-.
- Do not bend the removal hook toward the outside.
- Interrupt the procedure if necessary, remove the output flange again and repeat the process.

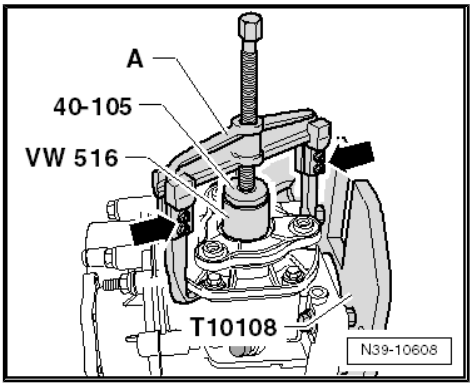

Output Flange Seal -arrow- Removing and Installing:

Seal, Removing

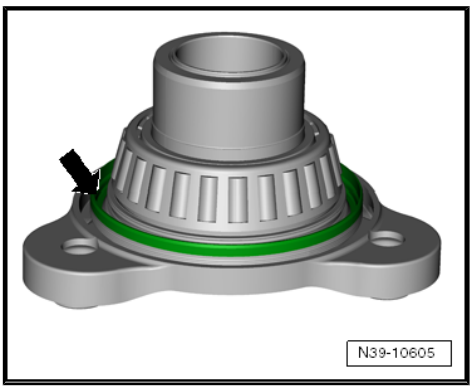

- When removing the output flange seal, the inner race/tapered roller bearing must also be removed.

– Place the Press Piece - Multiple Use - 40-105- on the output flange.

– Remove the inner race/tapered roller bearing from output flange with the Tapered Roller Bearing Puller .

– Remove the output flange seal.

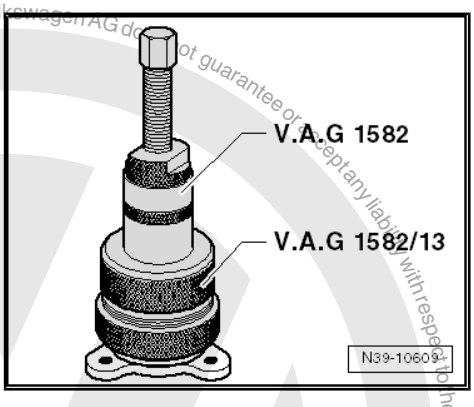

Seal, Installing

- First remove the pinion housing -1- along with the shaft bevel gear -2- in order to install the seal:

– Remove the bolts for the pinion housing -1-; and carefully remove the pinion housing diagonally of the protruding edges.

– Remove the pinion housing and the shaft bevel gear -2-.

– Clean the thread on the shaft bevel gear.

- If the shim -3- was also removed during the removal of the output flange, it must be placed back in the pinion housing.
- This will maintain the bearing pre-load on the shaft bevel gears inside the pinion housing.

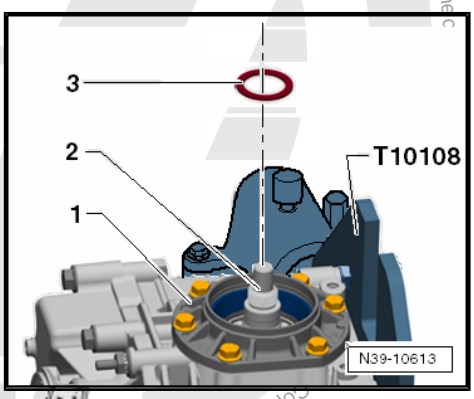

Protected by copyright. Copying for private or commercial purposes, in part or in whole, is not permitted unless authorised by Volkswagen AG. Volkswagen AG does not guarantee or accept any liability with respect to the c
Copyright by Volkswagen AG.

– Place the old inner race/tapered roller bearing -1- into the pinion housing.

– Lightly lubricate the outer diameter of the new output flange seal -2-.

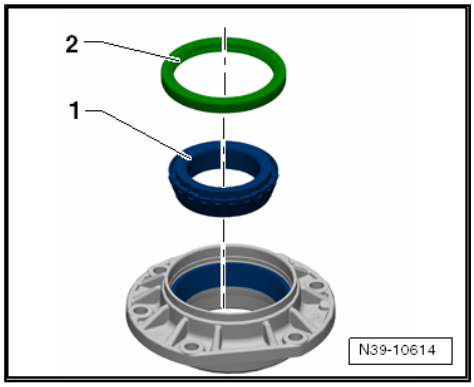

– Drive in the new seal using Seal Installer - Flange Shaft - T10049- .

• The seal must be flush with the upper edge of the housing.

– Fill the space between the sealing and dust lip of the seal halfway with Sealing Grease - G 052 128 A1- .

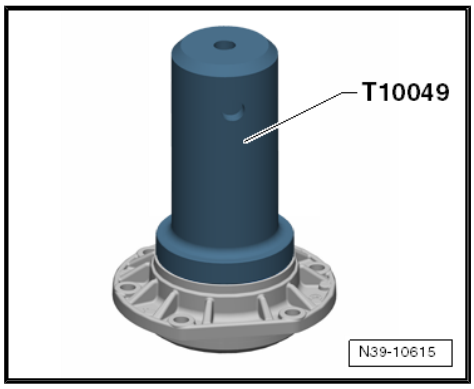

– Press in the output flange along with the pinion housing and shaft bevel gear all the way.

• The shoulder -arrow- of the Press Piece - Multiple Use - VW455- points to the shaft bevel gear.

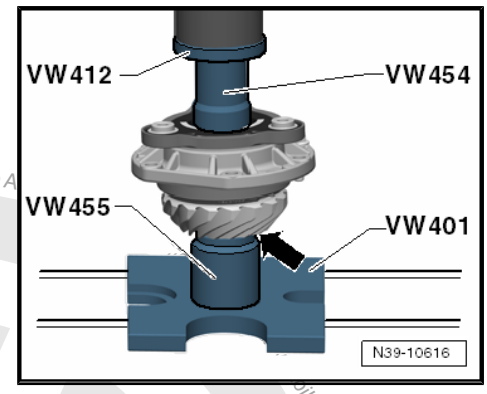

– Install the M 8 X 30 mm stud bolts = -A- or Guide Pins - M8 - T10273- into the axle drive housing.

– Slide a new O-Ring -1- onto the pinion housing -2-.

The pinion housing -2- and shim -3- only fit in one position.

– Install the previous shim -3-.

– Carefully install the pinion housing diagonally all the way with Removal Device - Pin 2 - VW460/2- .

There is very little space between the pinion housing and the bevel box housing.

The gap is closed when the pinion housing is tightened.

– Tighten the bolts for the pinion housing -2- diagonally.

Tightening Specification -item 21- ⇒ Item 21 (page 379) **.**

Continuation for All

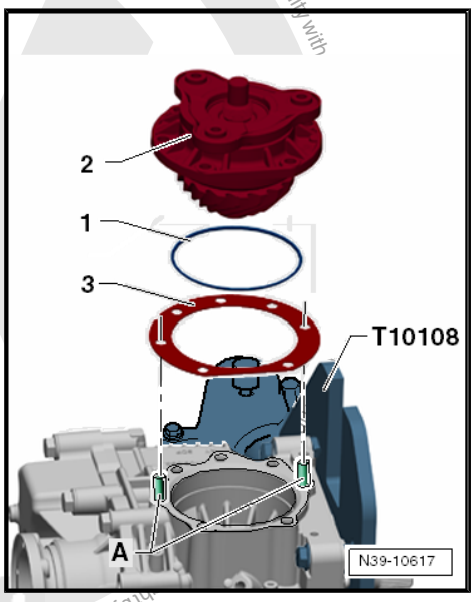

Protected by copyright. Copying for private or commercial purposes, in part or in whole, is not permitted unless authorised by Volkswagen AG. Volkswagen AG

Brought to you by Volkswagen AG. Volkswagen AG does not guarantee or accept any liability with respect to the accuracy of the information in this document. Copyright by Volkswagen AG.

Coat Threads of the New Hex Head Nut with Locking Compound - D 000 600- .

– Tighten new output flange hex head nut.

Tightening Specification -item 15- ⇒ Item 15 (page 378) .

A - 36 mm Socket for 3/4 Inch Drive

– Install the bevel box. Refer to ⇒ “9 Bevel Box, Removing and Installing”, page 193 .

– Check the gear oil in the bevel box. Refer to ⇒ “10 Axle Oil in Bevel Box, Checking or Adding”, page 218 .

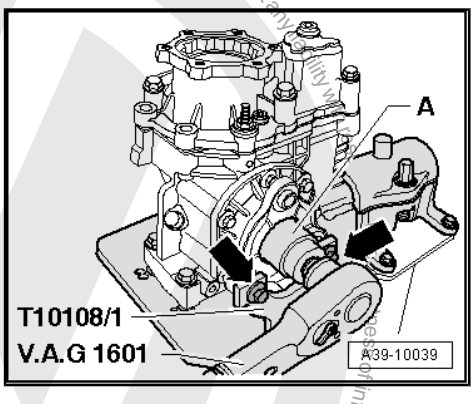

3.4 Output Flange, Replacing and Selecting New Shim for Output Flange, Bevel Box Removed

– Remove the output flange and, if necessary, remove the inner race/tapered roller bearing from the output flange. Refer to ⇒ “3.3 Bevel Box Output Flange Seal, Replacing (Bevel Box Removed)”, page 381 .

This adjustment is necessary whenever the output flange is being replaced. This creates the preload on the tapered roller bearing for the shaft bevel gear.

– Measure the length of the shaft on the old and new output flange to get the difference.

Example:	
Old output flange	42.90 mm
New output flange	43.00 mm
Difference	0.10 mm

If the new output flange is longer- install a thinner shim.

If the previously mentioned output flange is longer- install a thicker shim.

Allocation. Refer to the Parts Catalog.

– Install the output flange. Refer to ⇒ “3.3 Bevel Box Output Flange Seal, Replacing (Bevel Box Removed)”, page 381 .

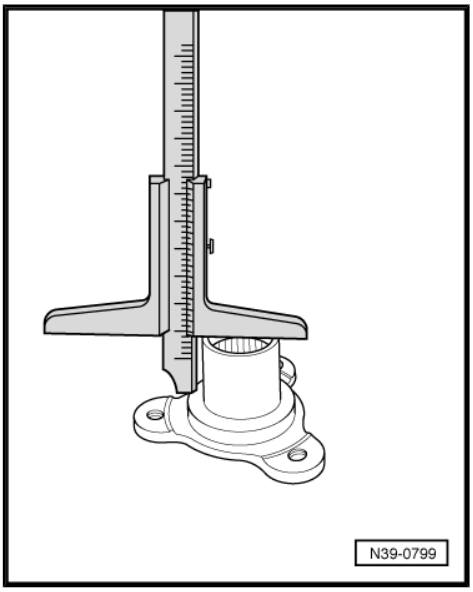

3.5 Needle Bearing (polygon bearing) on Right Flange Shaft and Seal on Right Flange Shaft, Replacing

Special tools and workshop equipment required

- Press Plate - VW401-
- Press Plate - VW402-
- Press Piece - Rod - VW407-
- Press Piece - Multiple Use - VW412-
- Bearing Installer - Rear Wheel Bearing Kit - VAS3253-
- Bearing Installer - Needle Bearing - T10047-

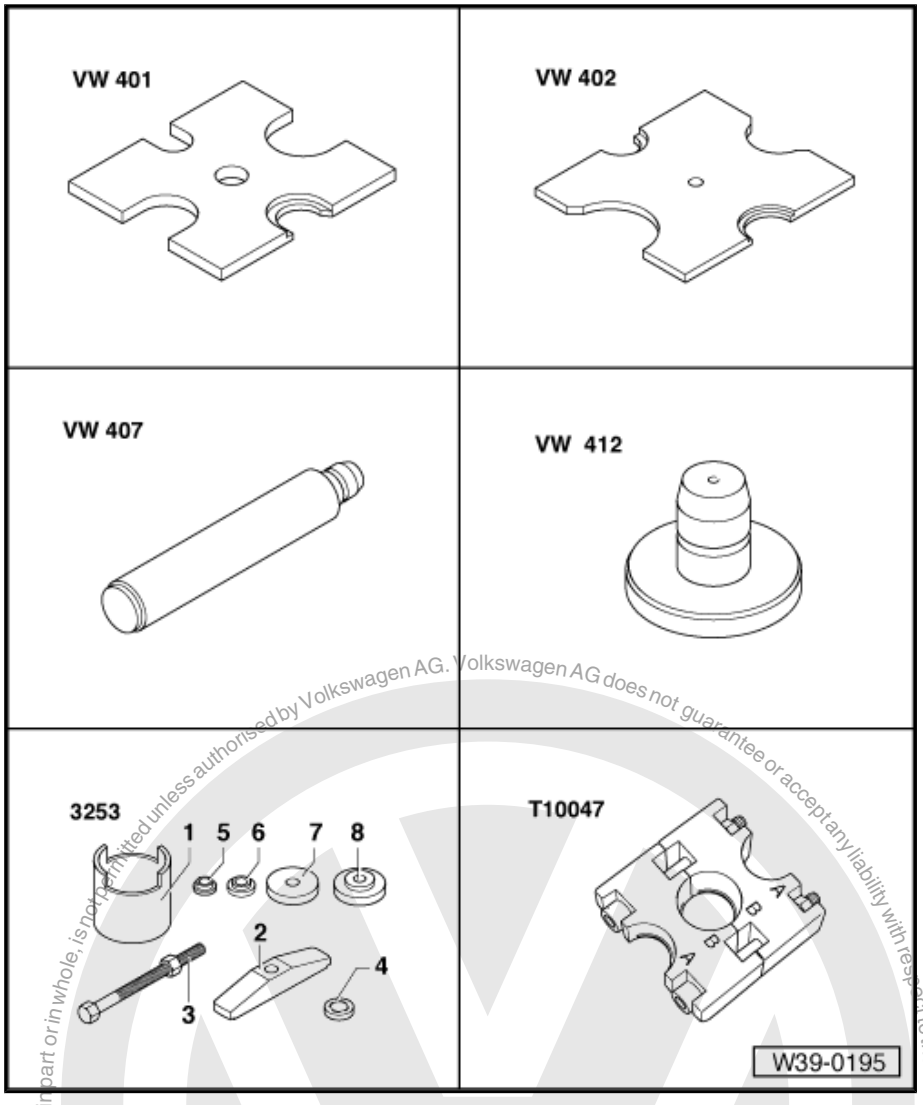

- Seal Installer - Crankshaft - VW204B-

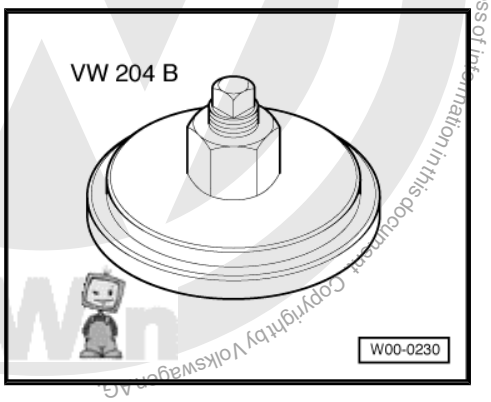

Protected by copyright. Copying for private or commercial purposes, in part or in whole, is not permitted unless authorised by Volkswagen AG. Volkswagen AG does not guarantee or accept any liability with respect to the correctness of information in this document. Copyright by Volkswagen AG.

Protected by copyright. Copying for private or commercial purposes, in part or in whole, is not permitted unless authorised by Volkswagen AG. Volkswagen AG does not guarantee or accept any liability with respect to the correctness of information in this document. Copyright by Volkswagen AG.

- Press Piece - Bushing - VW434-

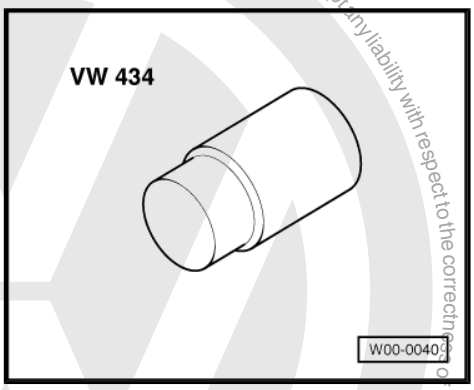

- Puller - Flanged Shaft - T10037-

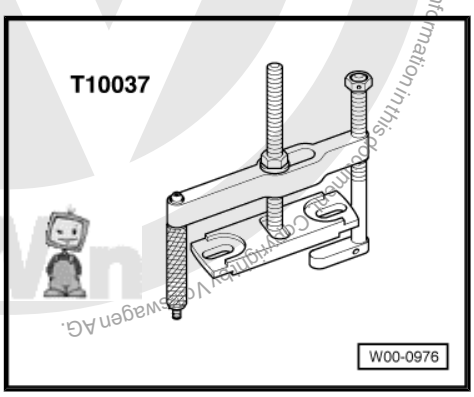

- Socket And Extended Bit - T10107A-

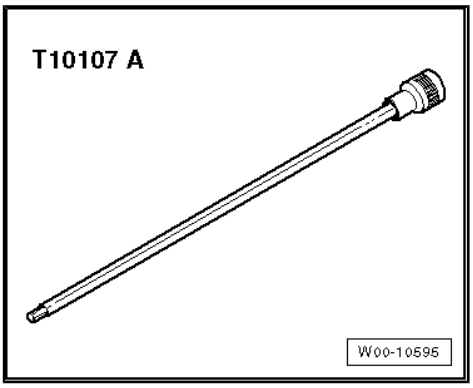

3.5.1 Removing

The right driveshaft must be removed later in the procedure.

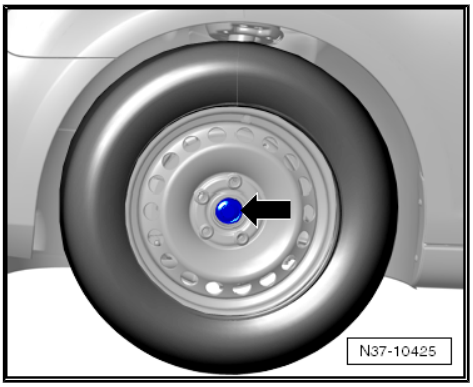

– With the vehicle still standing on its wheels, loosen the right front collar bolt -arrow- a maximum 90°, otherwise the wheel bearing will get damaged. Refer to ⇒ Suspension, Wheels, Steering; Rep. Gr. 40 ; Drive Axles, Removing and Installing .
– Remove the right front wheel.
– Remove the noise insulation under the engine/transmission, if equipped. Refer to ⇒ Body Exterior; Rep. Gr. 50 ; Noise Insulation .

– Remove the driveshaft heat shield from the bevel box -arrows-.

– Remove the right driveshaft. Refer to ⇒ Suspension, Wheels, Steering; Rep. Gr. 40 ; Drive Axles, Removing and Installing .

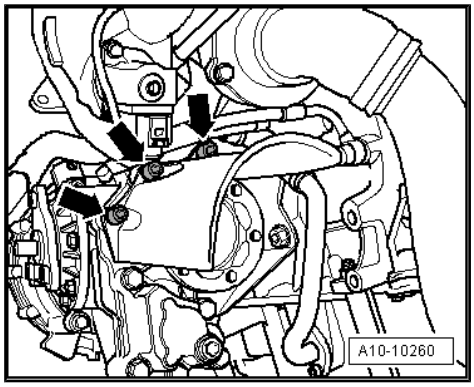

Vehicles with a Particulate Filter

– Remove the nuts -1 and 2- and then remove the particulate filter bracket.

Continuation for All

– Place the drip tray under the transmission.

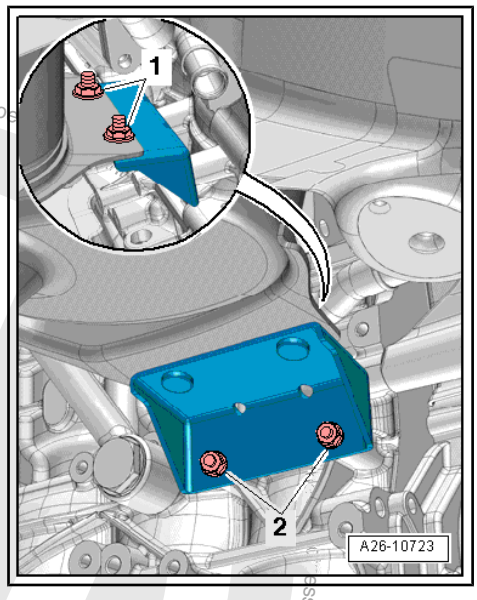

– Remove the right flange shaft bolt -arrow 1- with the Socket And Extended Bit -T10107A- and install two bolts in the flange and counterhold the flange shaft with the pry bar.

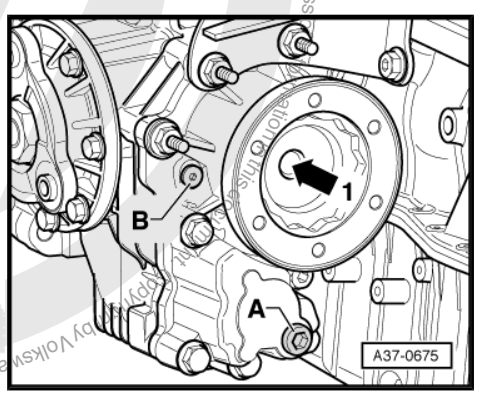

Protected by copyright. Copying for private or commercial purposes, in part or in whole, is not permitted unless authorised by Volkswagen AG. Volkswagen AG does not guarantee or assume any liability for the accuracy of this document or the consequences of its use.

– Tighten the Puller - Flanged Shaft - T10037- on right flange shaft.

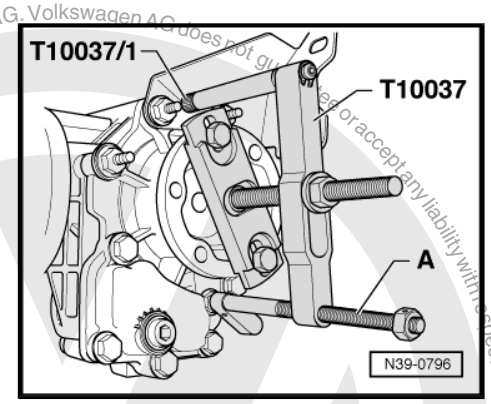

Note

To remove right flange shaft, use Puller - Flanged Shaft - T10037- to avoid damaging the bearing on flange shaft.

– Place a spacer (for example, Press Piece - Bushing - VW434-) between the transmission support and the Stub Shaft counterhold Tool - Knurled Nut - T10371/1- .

– Align the Puller - Flanged Shaft - T10037- parallel to the flange using the Spindle -A-.

– Install the right flange shaft.

Attach the Bearing Installer - Needle Bearing - T10047- , as shown in the illustration, to the flange shaft.

- The markings “B” on both parts face each other.
- The depressions -arrows- must be under the bearing.

– Bolt the parts together all the way.

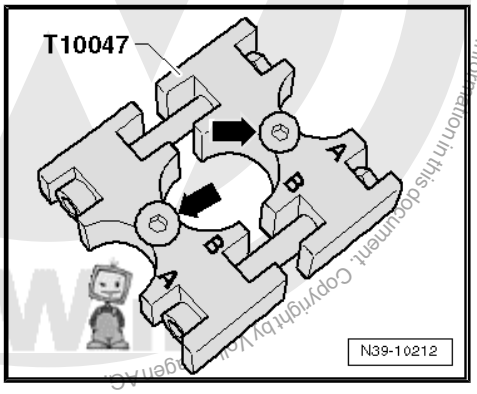

– Remove the locking ring -A- out of the needle bearing.

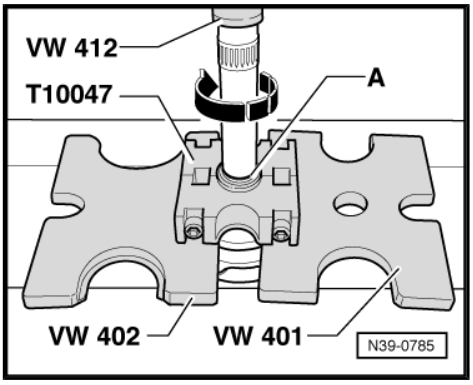

– So that the bearing contact surface on shaft is not damaged, shaft must be rotated during the pressing procedure -arrow-.

– Remove the old seal -A- from the groove -arrow-.

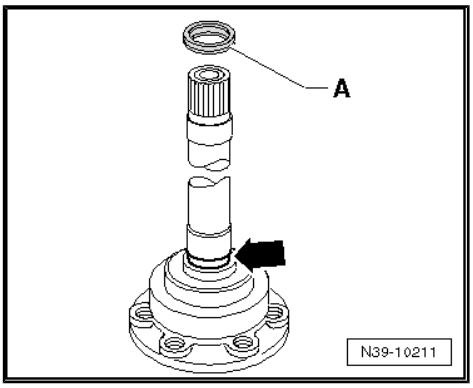

Protected by copyright. Copying for private or commercial purposes, in part or in whole, is not permitted unless authorised by Volkswagen AG. Volkswagen AG does not guarantee or accept any liability with respect to the correctness of information in this document. Copyright by Volkswagen AG.

3.5.2 Installing

– Coat the new seal -A- with transmission fluid and insert it into the groove -arrow- of the flange shaft.

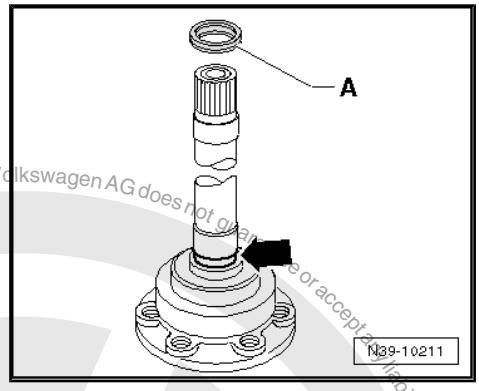

Note

Make sure seal is not tilted.

– Attach the Bearing Installer - Needle Bearing - T10047- to the flange shaft. Refer to ⇒ page 391 .

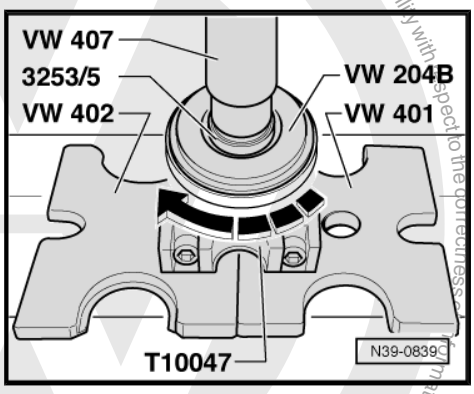

– So that the bearing contact surface on shaft is not damaged, shaft must be rotated during the pressing procedure -arrow-.

– Secure the needle bearing with a new circlip.

– Carefully install the flange shaft while rotating it at the same time.

– Install flange shaft with a screw and tighten to tightening specification ⇒ Item 13 (page 401) .

Install in reverse order of removal.

Vehicles with a Particulate Filter

– Install the particulate filter bracket. Refer to ⇒ Rep. Gr. 26 .

Continuation for All

– Install the right drive axle. Refer to ⇒ Suspension, Wheels, Steering; Rep. Gr. 40 ; Drive Axles, Removing and Installing .

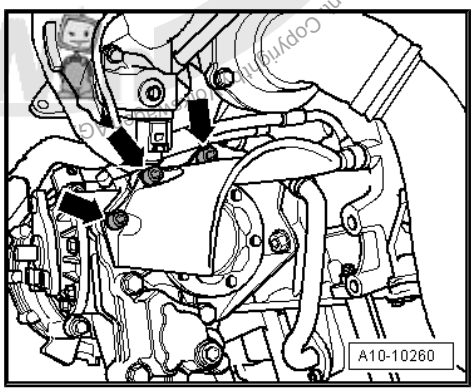

– Attach the right driveshaft heat shield to the bevel box -arrows- and tighten it to the tightening specification. Refer to ⇒ “9.1.3 Tightening Specifications”, page 201 .

– Check the gear oil in the bevel box. Refer to ⇒ “10 Axle Oil in Bevel Box, Checking or Adding”, page 218 .

– Check transmission fluid level inside the manual transmission. Refer to ⇒ “8 Transmission Fluid, Checking”, page 192 .

– Install the noise insulation. Refer to ⇒ Body Exterior; Rep. Gr. 50 ; Noise Insulation .

– Install the right front wheel. Refer to ⇒ Suspension, Wheels, Steering; Rep. Gr. 44 ; Wheel Installation Tightening Specifications .

Protected by copyright. Copying for private or commercial purposes, in part or in whole, is not permitted unless authorised by Volkswagen AG. Volkswagen AG does not guarantee or accept any liability with respect to the correctness of information in this document.

4 Overview - Adjustment

Note

When performing repairs on the transmission, readjustment of the output shaft for 1st to 4th gears, output shaft for 5th/6th gear and reverse gears or differential is only required if components, which have a direct influence on transmission adjustment, have been replaced. Refer to Table to avoid any unnecessary adjusting.

		To be adjusted:		
		Output shaft, 1st to 4th gears. Refer to ⇒ “2.3 Output Shaft 1st through 4th Gear, Adjusting”, page 340 .	Output shaft, 5th/6th and reverse gears. Refer to ⇒ “3.3 Output Shaft, 5th, 6th and Reverse Gears, Adjusting”, page 353 .	Differential Refer to ⇒ “5.3 Differential, Adjusting”, page 405 .
Replaced part:	Transmission Housing	x	x	x
	Clutch Housing	x	x	x
	1st through 4th Gear Output Shaft	x		
	5th, 6th and Reverse Gear Output Shaft		x	
	Differential housing			x
	Output shaft tapered roller bearing, 1st to 4th gears	x		
	Output shaft tapered roller bearing, 5th/6th and Reverse Gears		x	
	Differential tapered roller bearing			x

Copyright by Volkswagen AG. Volkswagen AG does not guarantee or accept any liability with respect to the correctness of information. Copying for private or commercial purposes, in part or in whole, is not permitted unless authorised by Volkswagen AG. Copyright by Volkswagen AG.

5 Differential

⇒ "5.1 FWD Differential, Disassembling and Assembling", page 394

⇒ "5.2 Differential, AWD, Disassembling and Assembling", page 399

⇒ "5.3 Differential, Adjusting", page 405

5.1 FWD Differential, Disassembling and Assembling

Special tools and workshop equipment required

- Press Plate - VW402-
- Press Piece - Rod - VW408A-
- Press Piece - Multiple Use - VW412-
- Press Piece - 60mm - VW415A-
- Press Piece - Multiple Use - 40-105-
- Press Piece - Multiple Use - 3005-
- Press Piece - Bushing - 3259-
- Press Piece - Reverse Gear Syncro - 3296-
- Bearing Installer - Wheel Bearing - 3345-
- Puller - Taper Roller Bearing - VAG1582-
- Puller - Taper Roller Bearing - Adapter 6A - VAG1582/6A-
- Puller - Kukko Internal - 46-56mm - 21/7-
- Puller - Kukko Puller - 60-150mm Width, 200mm Length - 18/1-
- Puller - Kukko Quick Action Separating Tool - 12-75mm - 17/1-
- Puller - Kukko Counterstay - 22/2-
- Inductive Heater - VAS6414-

Note

- *Secure the transmission on the assembly stand. Refer to ⇒ "7 Transmission, Securing in Engine/Transmission Holder", page 191 .*
- *Before installing, warm the inner race/tapered roller bearing to approximately 100 °C (212 °F) with Inductive Heater - VAS6414- .*
- *Adjust the differential when replacing the tapered roller bearing, differential housing, transmission housing or clutch housing. Refer to ⇒ "5.3 Differential, Adjusting", page 405 .*

Protected by copyright. Copying for private or commercial purposes in part or in whole, is not permitted unless authorised by Volkswagen AG. Volkswagen AG does not guarantee or accept any liability with respect to the correctness of information in this document. Copyright by Volkswagen AG.

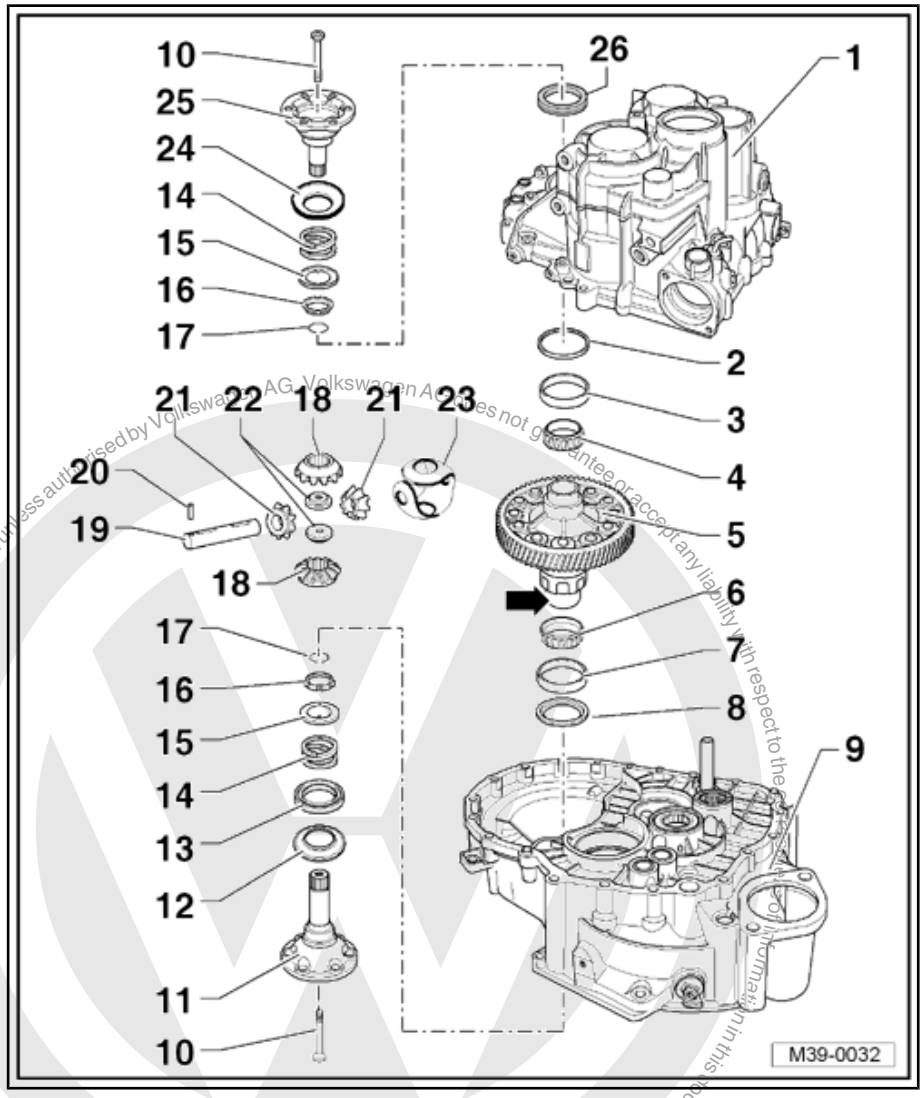

1 - Transmission Housing

2 - Shim

- For the differential
- Selecting thickness. Refer to ⇒ "5.3 Differential, Adjusting", page 405 .

3 - Outer Race/Tapered Roller Bearing

- Removing. Refer to ⇒ Fig. ""Removing the Outer Race/Tapered Roller Bearing from the Transmission Housing"" , page 398 .
- Installing. Refer to ⇒ Fig. ""Installing Outer Race/Tapered Roller Bearing into the Transmission Housing"" , page 398 .

4 - Inner Race / Tapered Roller Bearing

- Removing. Refer to ⇒ Fig. ""Removing the Inner Race/Tapered Roller Bearing"" , page 397
- Installing. Refer to ⇒ Fig. ""Installing the Inner Race/Tapered Roller Bearing"" , page 397 .

5 - Differential Housing

- With riveted final drive gear wheel

6 - Inner Race / Tapered Roller Bearing

- Removing. Refer to ⇒ Fig. ""Removing the Inner Race/Tapered Roller Bearing"" , page 398
- Installing. Refer to ⇒ Fig. ""Installing the Inner Race/Tapered Roller Bearing"" , page 398 .

7 - Outer Race/Tapered Roller Bearing

- Removing. Refer to ⇒ Fig. ""Removing the Outer Race/Tapered Roller Bearing from the Clutch Housing"" , page 397 .
- Installing. Refer to ⇒ Fig. ""Pressing Outer Race/Tapered Roller Bearing with Shim into Clutch Housing."" , page 397 .

8 - Washer

- Installed position: shoulder on inner diameter faces toward seal -item 13- ⇒ Item 13 (page 396)
- Allocation. Refer to the Parts Catalog.

9 - Clutch Housing

10 - Bolt

- 33 Nm
- Install with the threaded piece -item 22- ⇒ Item 22 (page 396) .

11 - Right Flange Shaft

12 - Protective Ring

- Pry the ring off the flange shaft with a screwdriver -item 11- ⇒ Item 11 (page 395) .
- Installed position: the depression points away from threaded holes in flanged shaft

Protected by copyright. Copying for private or commercial purposes, in part or in whole, is not permitted unless authorised by Volkswagen AG. Volkswagen AG does not guarantee or accept any liability with respect to the correctness of information in this document. Copyright by Volkswagen AG.

- ❑ Install the ring all the way by hand.
- ❑ The ring must lock into the flange shaft.

13 - Seal

- ❑ For the right flange shaft
- ❑ Allocation. Refer to the Parts Catalog.
- ❑ Replace when the transmission is installed. Refer to ⇒ “1.2 Right Flange Shaft Seal, Replacing”, page 370 .

14 - Flange Shaft Pressure Spring

- ❑ Installed behind the flange shaft

15 - Thrust Washer

- ❑ Installed position: the collar faces toward spring, and tab, if equipped, faces toward tapered ring

16 - Tapered Ring

- ❑ Installed position: ball toward the differential housing

17 - Circlip

- ❑ Holds the tapered ring, the thrust washer and the pressure spring when the flange shaft is removed

18 - Large Differential Bevel Gear

- ❑ Installing. Refer to ⇒ Fig. ““Installing the Differential Bevel Gears”“ , page 399 .

19 - Differential Bevel Gear Axle

- ❑ Remove using a drift
- ❑ Installing. Refer to ⇒ Fig. ““Installing the Differential Bevel Gears”“ , page 399 .

20 - Adapter Sleeve

- ❑ To secure the differential bevel gear axle
- ❑ Removing and installing. Refer to ⇒ Fig. ““Removing and Installing Roll Pin for Differential Bevel Gear Axle”“ , page 399 .

21 - Small Differential Bevel Gear

- ❑ Installing. Refer to ⇒ Fig. ““Installing the Differential Bevel Gears”“ , page 399 .

22 - Threaded Piece

- ❑ Installing. Refer to ⇒ Fig. ““Installing the Differential Bevel Gears”“ , page 399 .

23 - Thrust Washer Union

- ❑ Install with transmission fluid

24 - Protective Ring

- ❑ Pry the ring off the flange shaft with a screwdriver -item 25- ⇒ Item 25 (page 396) .
- ❑ Installed position: the depression points away from threaded holes in flanged shaft
- ❑ Install the ring all the way by hand.
- ❑ The ring must lock into the flange shaft.

25 - Left Flange Shaft

26 - Seal

- ❑ For the left flange shaft
- ❑ Allocation. Refer to the Parts Catalog.
- ❑ Replace when the transmission is installed. Refer to ⇒ “1.1 Left Flange Shaft Seal, Replacing”, page 369 .

Protected by copyright. Copying for private or commercial purposes, in part or in whole, is not permitted unless authorised by Volkswagen AG. Volkswagen AG does not guarantee or accept any liability with respect to the correctness of information in this document. Copyright by Volkswagen AG.

Removing the Outer Race/Tapered Roller Bearing from the Clutch Housing

A - Counter Support , for example, Puller - Kukko Counterstay - 22/2-

B - Internal Puller 46 to 58 mm , for example, Puller - Kukko Internal - 46-56mm - 21/7-

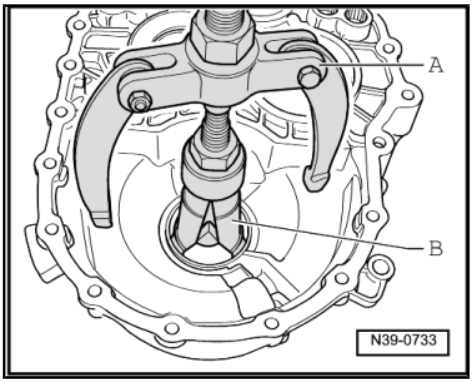

Note

Check the washer -item 8- ⇒ Item 8 (page 395) for damage after removing it and replace if necessary.

Pressing Outer Race/Tapered Roller Bearing with Shim into Clutch Housing.

– Install the washer beforehand.

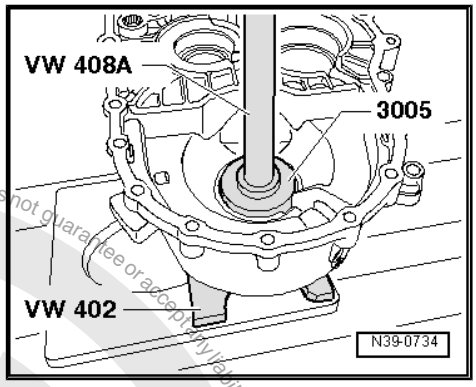

Note

- *Pay attention to the installed position of the shim -item 8- ⇒ Item 8 (page 395) .*
- *The collar on the inner circumference faces the seal.*

Removing the Inner Race/Tapered Roller Bearing

– Before installing the puller, mount the Press Piece - Multiple Use - 40-105- onto the differential housing.

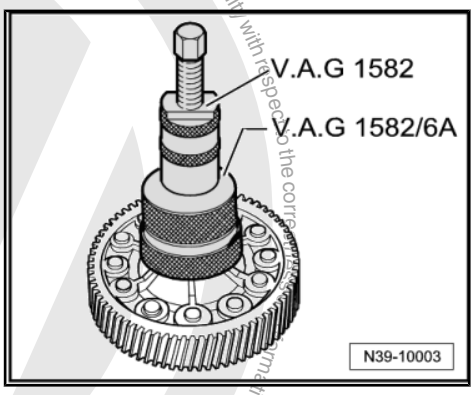

Installing the Inner Race/Tapered Roller Bearing

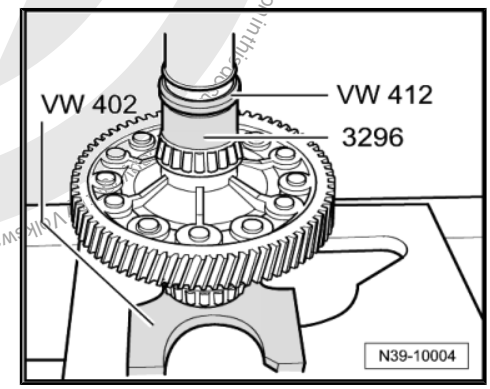

Protected by copyright. Copying for private or commercial purposes, in part or in whole, is not permitted unless authorised by Volkswagen AG. Volkswagen AG does not guarantee or accept any liability with respect to the correctness of information in this document. Volkswagen AG.

Removing the Inner Race/Tapered Roller Bearing

A - Puller , for example, Puller - Kukko Puller - 60-150mm Width, 200mm Length - 18/1-

B - Separating Tool 12 to 75 mm , for example, Puller - Kukko Quick Action Separating Tool - 12-75mm - Kukko 17/1-

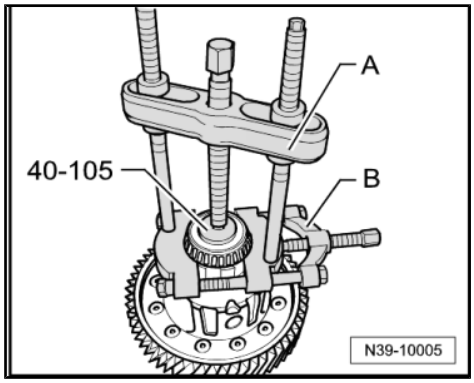

Installing the Inner Race/Tapered Roller Bearing

The cage with the tapered rollers must rotate easily when being installed.

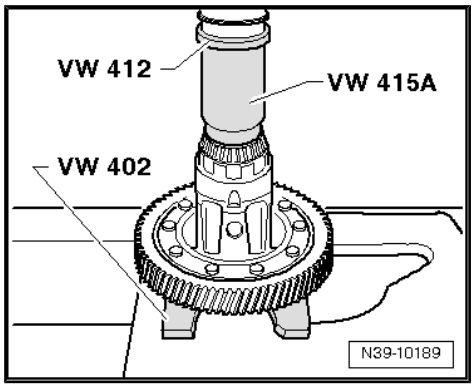

Removing the Outer Race/Tapered Roller Bearing from the Transmission Housing

A - Counter Support , for example, Puller - Kukko Counterstay - 22/2-

B - Internal Puller 46 to 58 mm , for example, Puller - Kukko Internal - 46-56mm - 21/7-

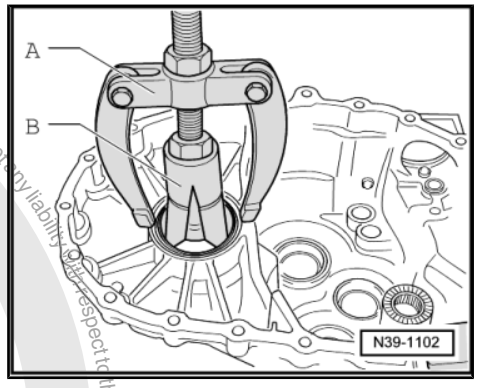

Installing Outer Race/Tapered Roller Bearing into the Transmission Housing

– Support the transmission housing directly under the bearing mount using the Bearing Installer - Wheel Bearing - 3345- .

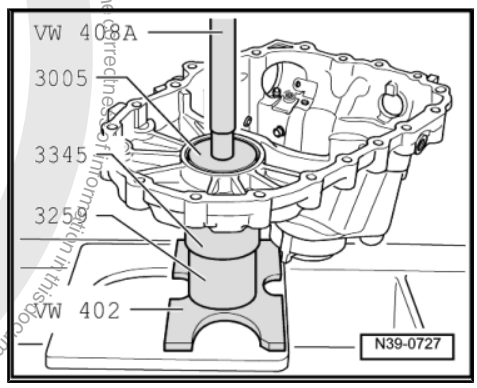

Protected by copyright. Copying for private or commercial purposes, in part or in whole, is not permitted unless authorised by Volkswagen AG. Volkswagen AG does not guarantee or accept any liability with respect to the correctness of information in this document. Copyright by Volkswagen AG.

Removing and Installing Roll Pin for Differential Bevel Gear Axle

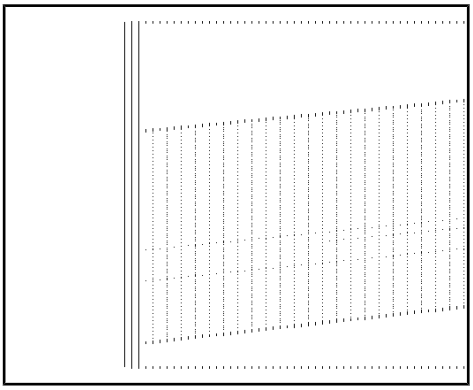

Removing

– Cover the inner race/tapered roller bearing in order to prevent possible damage and entry of shavings.

– Remove the spring pin using a chisel.

Installing

– Drive into the differential housing up to the stop.

Installing the Differential Bevel Gears

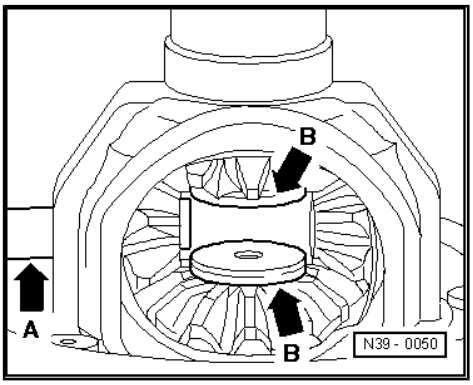

– Insert thrust washer union with transmission fluid.

– Install and secure both large differential planetary gears, for example, with a flange shaft.

– Insert the small differential planetary gears 180° offset and pivot them into position.

– Press the differential bevel gear -arrow A- up to the first small differential bevel gear.

– Insert threaded pieces -arrow B- into the large differential planetary gears.

Installed position: shoulder faces the differential bevel gear

– Install the differential bevel gear axle up the end position and secure it with a new spring pin.

5.2 Differential, AWD, Disassembling and Assembling

Special tools and workshop equipment required

- Press Plate - VW402-
- Press Piece - Rod - VW408A-
- Press Piece - Rod - VW411-
- Press Piece - Multiple Use - VW412-
- Press Piece - Multiple Use - 30-23-
- Press Piece - Multiple Use - 40-105-
- Press Piece - Multiple Use - 3005-
- Press Piece - Bushing - 3259-
- Press Piece - Reverse Gear Syncro - 3296-
- Subframe Bushing Tool Kit - 3301-
- Bearing Installer - Wheel Bearing - 3345-
- -1- Puller - Kukko Internal - 46-56mm - 21/7-
- -2- Puller - Kukko Puller - 60-150mm Width, 200mm Length - 18/1-
- -3- Puller - Kukko Quick Action Separating Tool - 12-75mm - 17/1-
- -4- Puller - Kukko Counterstay - 22/2-
- Inductive Heater - VAS6414-

Protected by copyright. Copyright by Volkswagen AG. Copying for private or commercial purposes, in part or in whole, is not permitted unless authorised by Volkswagen AG. Volkswagen AG does not guarantee or accept any liability with respect to the correctness of information in this document.

- -3- Puller - Kukko 2-Arm w/Side Clamp, 100mm Width, 100mm Length - 204/2-

Note

- *Secure the transmission on the assembly stand. Refer to ⇒ "7 Transmission, Securing in Engine/Transmission Holder", page 191 .*
- *Before installing, warm the inner race/tapered roller bearing to approximately 100 °C (212 °F) with Inductive Heater - VAS6414- .*
- *Replace both tapered roller bearings together.*
- *Adjust the differential when replacing the tapered roller bearing, differential housing, transmission housing or clutch housing. Refer to ⇒ "5.3 Differential, Adjusting", page 405 .*

Copyright by Volkswagen AG. Volkswagen AG does not guarantee or accept any liability with respect to the correctness of information in this document. Copyright by Volkswagen AG. Copying for private or commercial purposes, in part or in whole, is not permitted unless authorised by Volkswagen AG.

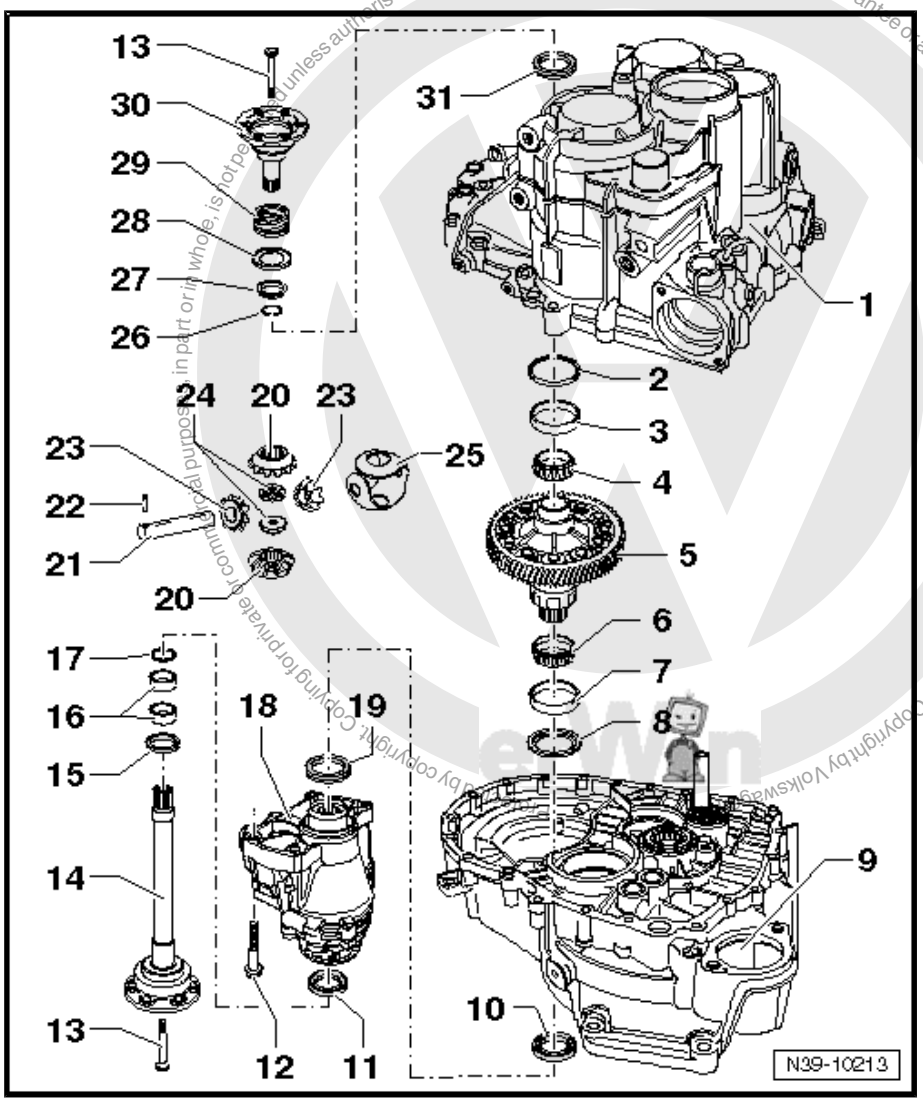

1 - Transmission Housing

2 - Shim

- ❑ For the differential
- ❑ Selecting thickness. Refer to ⇒ "5.3 Differential, Adjusting", page 405 .

3 - Outer Race/Tapered Roller Bearing

- ❑ Removing. Refer to ⇒ Fig. ""Removing the Outer Race/Tapered Roller Bearing from the Transmission Housing"" , page 404 .
- ❑ Installing. Refer to ⇒ Fig. ""Installing Outer Race/Tapered Roller Bearing into the Transmission Housing"" , page 404 .

4 - Inner Race / Tapered Roller Bearing

- ❑ Removing. Refer to ⇒ Fig. ""Removing the Inner Race/Tapered Roller Bearing"" , page 403
- ❑ Installing. Refer to ⇒ Fig. ""Heat the Inner Race/Tapered Roller Bearing and Press On It"" , page 403 .

5 - Differential Housing

- ❑ With riveted final drive gear wheel

6 - Inner Race / Tapered Roller Bearing

- ❑ Removing. Refer to ⇒ Fig. ""Removing the Inner Race/Tapered Roller Bearing"" , page 403
- ❑ Installing. Refer to ⇒ Fig. ""Installing the Inner Race/Tapered Roller Bearing"" , page 403 .

7 - Outer Race/Tapered Roller Bearing

- ❑ Removing. Refer to ⇒ Fig. ""Removing the Outer Race/Tapered Roller Bearing from the Clutch Housing"" , page 402 .

- ❑ Installing. Refer to
  ⇒ Fig. ""Pressing Outer Race/Tapered Roller Bearing with Shim Into Clutch Housing."" , page 402 .

8 - Washer

- ❑ Installed position: the collar on the inner circumference faces the seal.
- ❑ Allocation. Refer to the Parts Catalog.

9 - Clutch Housing

10 - Seal

- ❑ Installed in the manual transmission, between the manual transmission and the bevel box
- ❑ Replace with transmission installed. Refer to
  ⇒ "2.3 Bevel Box Seal, Replacing, with Manual Transmission Installed", page 375
- ❑ Remove using the Puller - Crankshaft/Power Steering Seal - 2 - T20143/2- or Puller - Seal Lever - VW681-
- ❑ Can be driven in to the stop with a Seal Installer - Crankshaft - T40007- in a disassembled transmission.

11 - Seal

- ❑ For the right flange shaft
- ❑ The left and right diameters are different
- ❑ Replace with manual transmission installed with bevel box. Refer to
  ⇒ "2.2 Right Flange Shaft Seal, Replacing", page 373 .

12 - Hex Bolt -item 17- ⇒ Item 17 (page 235)

13 - Bolt

- ❑ 33 Nm
- ❑ Install with the threaded piece -item 24- ⇒ Item 24 (page 402) .

14 - Right Flange Shaft

- ❑ Removing and installing. Refer to ⇒ "2.2 Right Flange Shaft Seal, Replacing", page 373 .

15 - Seal

- ❑ Remove to replace needle bearing (polygon bearing -item 16- ⇒ Item 16 (page 401))

16 - Needle Bearing (Polygon Bearing)

- ❑ Replacing. Refer to
  ⇒ "3.5 Needle Bearing (polygon bearing) on Right Flange Shaft and Seal on Right Flange Shaft, Replacing", page 387 .

17 - Circlip

- ❑ Replace after removing
- ❑ For the needle bearing (polygon bearing)
- ❑ Insert in the surrounding flange shaft groove

18 - Bevel Box

- ❑ Seals, flange shaft bearing and output flange bearing inside the bevel box. Refer to
  ⇒ "3 Overview - Seals, Flange Shaft Bearing and Output Flange Bearing inside the Bevel Box", page 377 .

19 - Seal

- ❑ Installed in the bevel box between the bevel box and the manual transmission
- ❑ Replace with bevel box removed. Refer to
  ⇒ "3.2 Gasket on Bevel Box between Manual Transmission and Bevel Box, Replacing", page 380

20 - Large Differential Bevel Gear

- ❑ Installing. Refer to ⇒ Fig. ""Installing the Differential Bevel Gears"" , page 405 .

21 - Differential Bevel Gear Axle

- ❑ Removing. Refer to ⇒ Fig. ""Removing the Differential Bevel Gear Axle and Spring Pin"" , page 404 .
- ❑ Installing. Refer to ⇒ Fig. ""Installing the Differential Bevel Gears"" , page 405 .

22 - Adapter Sleeve

- ❑ To secure the differential bevel gear axle
- ❑ Removing. Refer to ⇒ Fig. ""Removing the Differential Bevel Gear Axle and Spring Pin"" , page 404 .

Protected by copyright. Copying for private or commercial purposes, part or whole, is not permitted unless authorised by Volkswagen AG. Volkswagen AG does not guarantee or accept any liability with respect to the correctness of information in this document. Copyright by Volkswagen AG.

- ❑ Drive new roll pin in flush. Refer to ⇒ Fig. ""Roll Pin, Installing"" , page 405

23 - Small Differential Bevel Gear

- ❑ Removing and installing. Refer to ⇒ Fig. ""Installing the Differential Bevel Gears"" , page 405 .

24 - Threaded Piece

- ❑ Installing. Refer to ⇒ Fig. ""Installing the Differential Bevel Gears"" , page 405 .

25 - Thrust Washer Union

- ❑ Install with transmission fluid

26 - Circlip

- ❑ Holds the tapered ring, the thrust washer and the pressure spring when the flange shaft is removed

27 - Tapered Ring

- ❑ With grooves for the thrust washer
- ❑ Installed position: ball toward the differential housing

28 - Thrust Washer

- ❑ Installed position: collar towards spring, tab toward tapered ring

29 - Left Flange Shaft Spring

- ❑ Installed behind left flange shaft

30 - Left Flange Shaft

31 - Seal

- ❑ For the left flange shaft
- ❑ The left and right diameters are different
- ❑ Replace when the transmission is installed. Refer to ⇒ "2.1 Left Flange Shaft Seal, Replacing", page 373 .

Removing the Outer Race/Tapered Roller Bearing from the Clutch Housing

A - Counter Support , for example, Puller - Kukko Counterstay - 22/2-

B - Internal Puller 46 to 58 mm , for example, Puller - Kukko Internal - 46-56mm - 21/7-

– Tension the internal puller -B- between the outer ring/tapered roller bearing and washer.

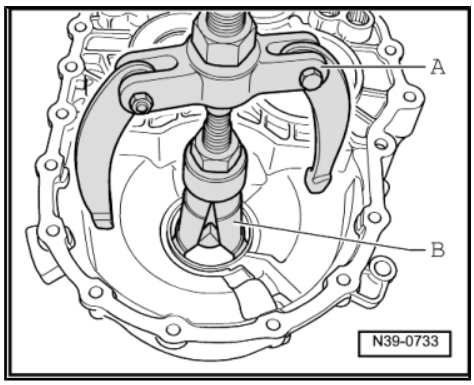

Note

Check the washer -item 8- ⇒ Item 8 (page 401) for damage after removing it and replace if necessary.

Pressing Outer Race/Tapered Roller Bearing with Shim Into Clutch Housing.

– Install the washer -item 8- ⇒ Item 8 (page 401) beforehand.

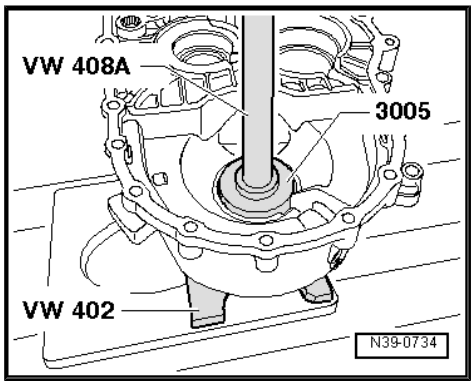

Note

- ♦ *Pay attention to the installed position of the shim.*
- ♦ *The collar on the inner circumference faces the seal.*

Removing the Inner Race/Tapered Roller Bearing

– Place the Press Piece - Multiple Use - 40-105- on the differential housing.

– Tension the Puller , for example, Puller - Kukko 2-Arm w/Side Clamp, 100mm Width, 100mm Length - 204/2- near the flattened sides of the differential housing under the inner race/ tapered roller bearing.

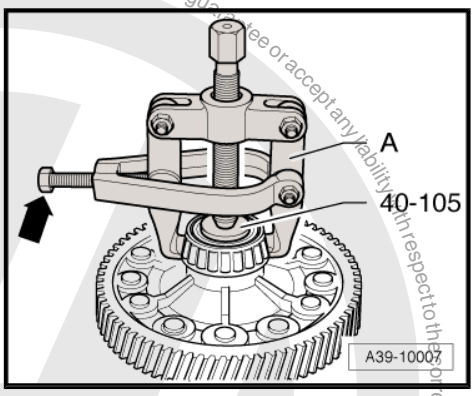

Note

When pulling off inner race, make sure that the hooks do not bend outward; if necessary, re-tighten bolt -arrow-.

Heat the Inner Race/Tapered Roller Bearing and Press On It

WARNING

Wear safety gloves.

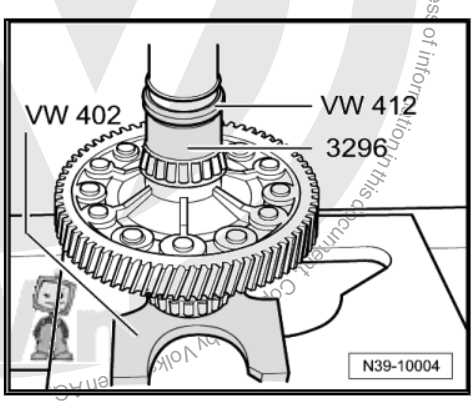

Removing the Inner Race/Tapered Roller Bearing

A - Puller , for example, Puller - Kukko Puller - 60-150mm Width, 200mm Length - 18/1-

B - Separating Tool 12 to 75 mm , for example, Puller - Kukko Quick Action Separating Tool - 12-75mm - 17/1-

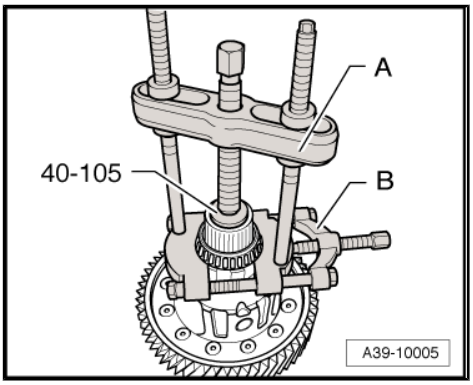

Installing the Inner Race/Tapered Roller Bearing

WARNING

Wear safety gloves.

– Place the Subframe Bushing Tool Kit - Assembly Tool 3 - 3301/3- on the Subframe Bushing Tool Kit - 3301- with the notch -arrow- (larger inner diameter) on inner race/tapered roller bearing.

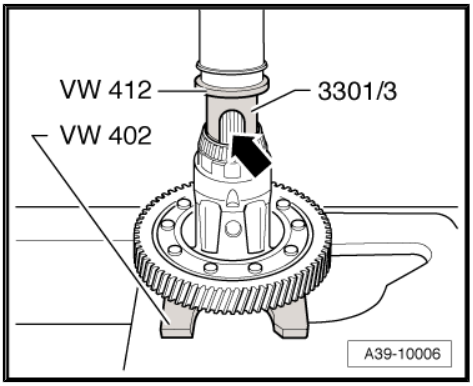

Protected by copyright. Copying for private or commercial purposes, in part or in whole, is not permitted unless authorized by Volkswagen AG. Volkswagen AG does not guarantee or accept any liability with respect to the correctness of information in this document. Copyright by Volkswagen AG.

Removing the Outer Race/Tapered Roller Bearing from the Transmission Housing

A - Counter Support , for example, Puller - Kukko Counterstay - 22/2-

B - Internal Puller 46 to 58 mm , for example, Puller - Kukko Internal - 46-56mm - 21/7-

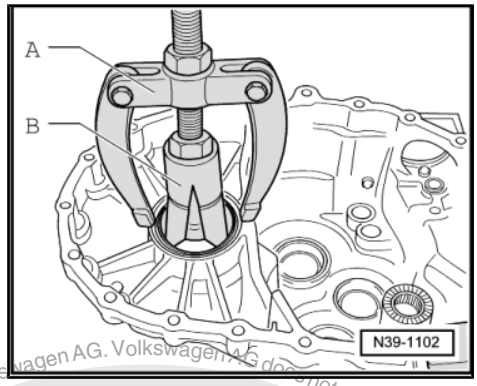

Installing Outer Race/Tapered Roller Bearing into the Transmission Housing

– Support the transmission housing directly under the bearing mount using the Bearing Installer - Wheel Bearing - 3345- .

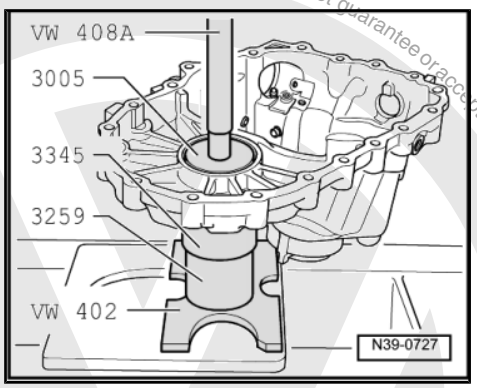

Removing the Differential Bevel Gear Axle and Spring Pin

– First drive roll pin -1- flush into differential bevel gear axle -2-.

– Mount the differential under the press with the adapter sleeve -arrow- facing the Press Piece - Multiple Use - 30-23- .

– Then remove the differential bevel gear axle.

Note

If necessary, remove the sheared parts of the adapter sleeve from the differential bevel box housing and remove the differential bevel gear axle.

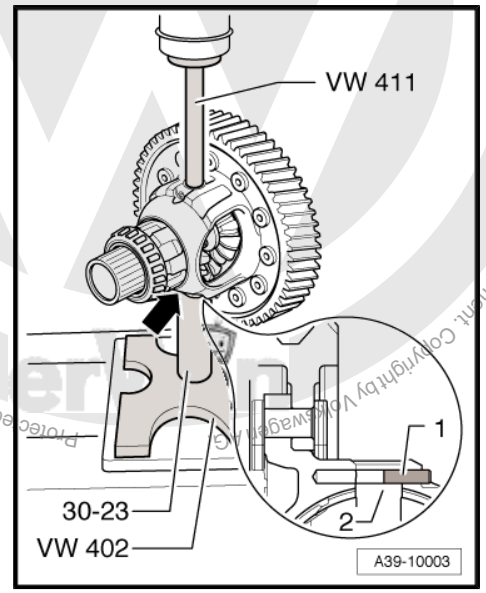

Protected by copyright. Copying for private or commercial purposes, in part or in whole, is not permitted unless authorised by Volkswagen AG. Volkswagen AG does not guarantee or accept any liability with respect to the correctness of information in this document. Copyright by Volkswagen AG.

Installing the Differential Bevel Gears

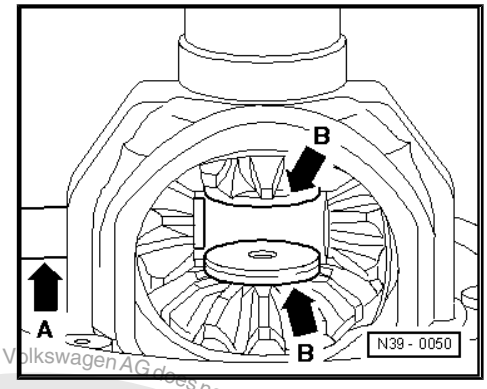

– Insert thrust washer union with transmission fluid.
– Install and secure both large differential planetary gears, for example, with a flange shaft.
– Insert the small differential planetary gears 180° offset and pivot them into position.
– Press the differential bevel gear axle -arrow A- up to the first small differential bevel gear.
– Insert threaded pieces -arrow B- into the large differential planetary gears.
• Installed position: shoulder faces the differential bevel gear
– Install the differential bevel gear axle up the end position and secure it with a new spring pin. Refer to ⇒ Fig. ""Roll Pin, Installing"" , page 405 .

Roll Pin, Installing

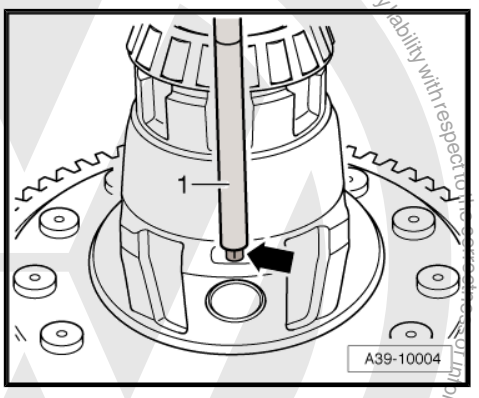

– Drive new roll pin -arrow- flush into differential bevel gear axle with a drift -1-.

5.3 Differential, Adjusting

⇒ "5.3.1 Determining the Shim", page 406

Special tools and workshop equipment required

- Measuring Set - Magnetic Plate - 50mm - VW385/17-
- Dial Gauge Holder - VW387-
- Press Plate - VW402-
- Press Piece - Rod - VW408A-
- Press Piece - Multiple Use - 3005-
- Press Piece - Bushing - 3259-
- Bearing Installer - Wheel Bearing - 3345-
- Puller - Kukko Internal - 46-56mm - 21/7-
- Puller - Kukko Counterstay - 22/2-
- Dial Indicator - VAS6080A-
- 30 mm dial gauge extension

A new differential adjustment is required when the following components have been replaced:

- Transmission Housing
- Clutch Housing
- Differential housing or
- Differential tapered roller bearing

Protected by copyright. Copyright by Volkswagen AG. Volkswagen AG does not guarantee or accept any liability with respect to the correctness of information in this document. Copyright by Volkswagen AG. Copying for private or commercial purposes, in part or in whole, is not permitted unless authorised by Volkswagen AG.

Adjustment overview. Refer to
⇒ “4 Overview - Adjustment”, page 393 .

– Pressing outer race/tapered roller bearing with shim into clutch housing.

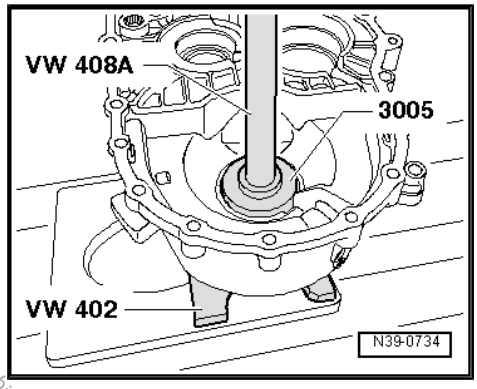

Note

- *Pay attention to the installed position of the shim.*
- *The collar on the inner circumference faces the seal.*

– Press the outer race/tapered roller bearing without the shim into transmission housing.

– Insert differential into clutch housing.

– Position the transmission housing and tighten the 5 bolts to the tightening specification -item 13- ⇒ Item 13 (page 230) and -item 14- ⇒ Item 14 (page 230) .

– Push the differential toward the clutch housing and rotate eight times at the same time.

– Press differential in direction of transmission housing and rotate eight times at the same time.

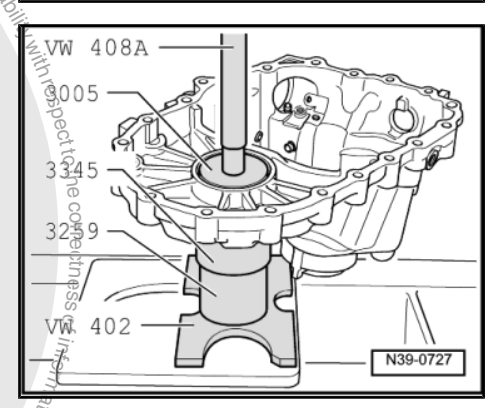

– Attach the gauge to the transmission housing and set it to “0” with 1 mm of pretension.

A - 30 mm dial gauge extension

– Move the differential up and down and read the play on the dial gauge and note it (example: 0.70 mm).

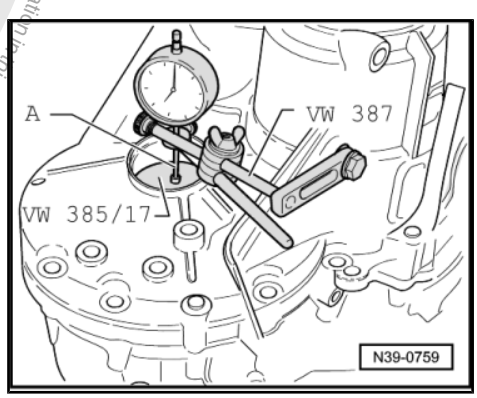

5.3.1 Determining the Shim

The specified bearing pre-load is obtained by adding a constant pre-load figure of 0.25 mm to the reading obtained.

Example

Measured value	0.70 mm
+ Preload (constant value)	0.25 mm
Adjusting shim thickness =	0.95 mm

– Remove the transmission housing.

Protected by copyright. Copying for private or commercial purposes, in part or in whole, is not permitted unless authorised by Volkswagen AG. Volkswagen AG does not guarantee or accept any liability with respect to the correctness of information in this document. Copyright by Volkswagen AG.

– Remove the tapered roller bearing outer race from the transmission housing.

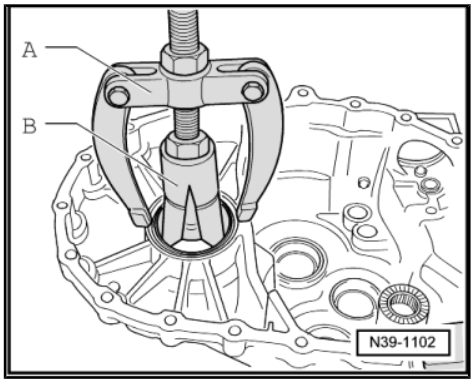

A - Counter Support , for example, Puller - Kukko Counterstay - 22/2-

B - Internal Puller 46 to 58 mm , for example, Puller - Kukko Internal - 46-56mm - 21/7-

– Shim part number. Refer to the Parts Catalog.

– Install the shim with the correct thickness, thickest shim first.

The following shims are available:

Shim Thickness (mm)			
0.65	0.85	1.05	1.25
0.70	0.90	1.10	
0.75	0.95	1.15	
0.80	1.00	1.20	

If the measured shim thickness is larger than those listed in the table, then install two shims that add up to the necessary thickness. Insert the thicker shim first.

Tolerance variations make it possible to find the exact shim thickness required.

– Install the outer race and the transmission housing and tighten to the tightening specification -item 13- ⇒ Item 13 (page 230) and -item 14- ⇒ Item 14 (page 230) .

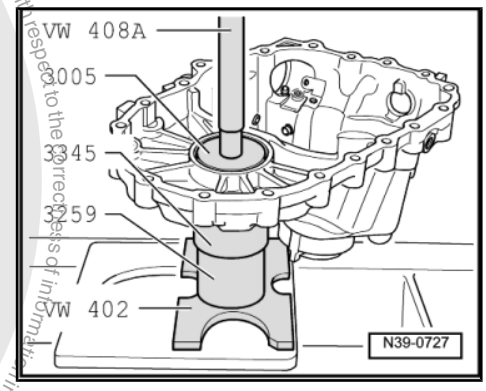

Protected by copyright. Copying for private or commercial purposes, in part or in whole is not permitted unless authorised by Volkswagen AG. Volkswagen AG does not guarantee or accept any liability with respect to the correctness of information in this document. Copyright by Volkswagen AG.

6 Special Tools

Special tools and workshop equipment required

- Puller - Flanged Shaft - T10037-
- Seal Installer - Flange Shaft - T10049-
- Socket And Extended Bit - T10107-
- or Socket And Extended Bit - T10107A-
- Torque Wrench 1331 5-50Nm - VAG1331-
- Sealing Grease - G 052 128 A1-

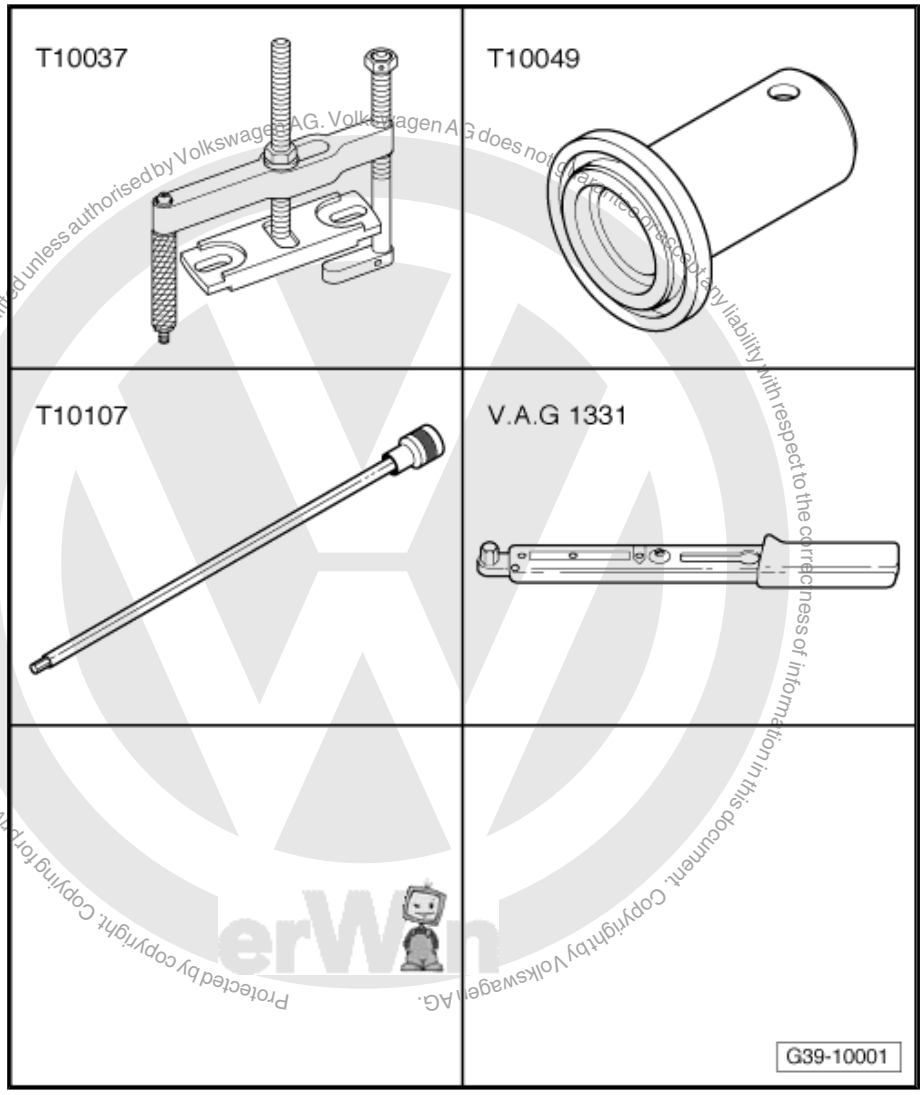

Protected by copyright. Copying for private or commercial purposes, in part or in whole, is not permitted unless authorised by Volkswagen AG. Volkswagen AG does not guarantee or accept any liability with respect to the correctness of information in this document. Copyright by Volkswagen AG.

- Press Plate - VW402-
- Press Piece - Rod - VW408A-
- Press Piece - Rod - VW411-
- Press Piece - Multiple Use - VW412-
- Press Piece - Multiple Use - 30-23-
- Press Piece - Multiple Use - 40-105-

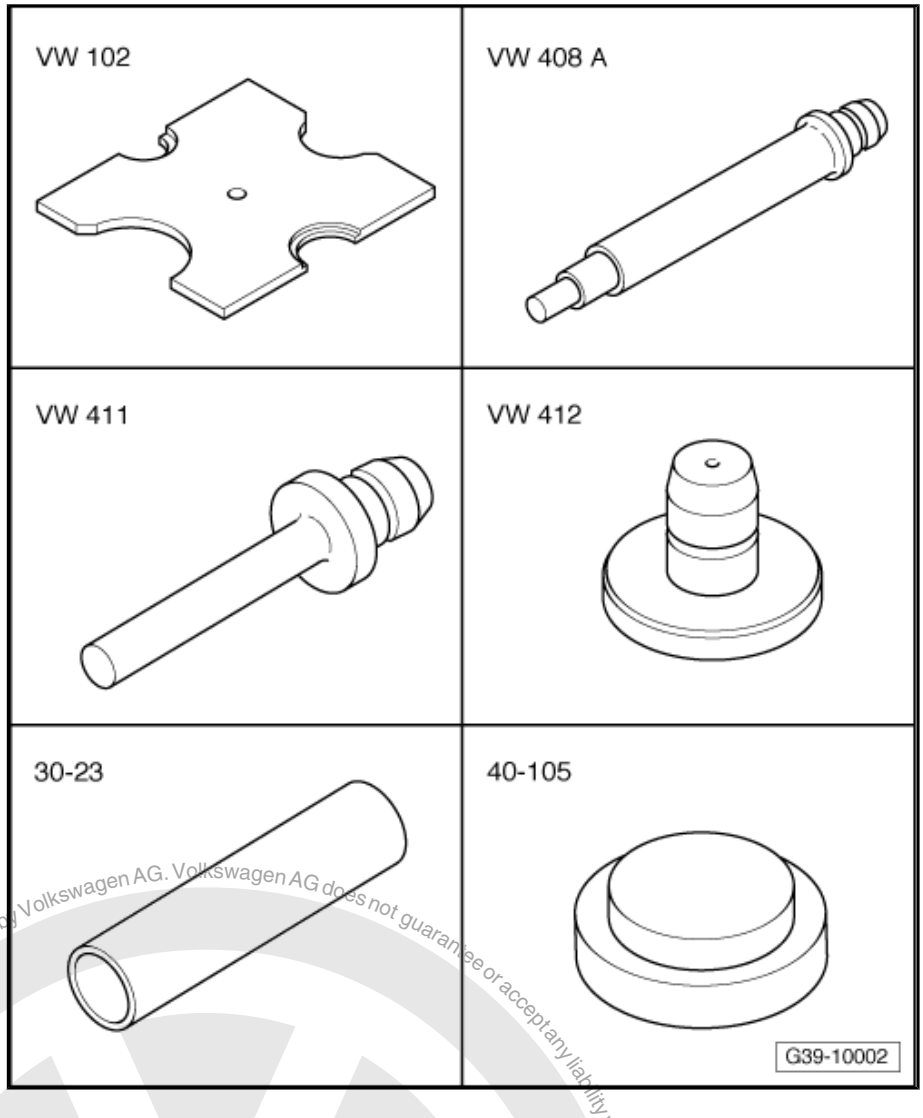

Protected by copyright. Copying for private or commercial purposes, in part or in whole, is not permitted unless authorised by Volkswagen AG. Volkswagen AG does not guarantee or accept any liability with respect to the correctness of information in this document. Copyright by Volkswagen AG.

- Press Piece - Bushing - 3259-
- Press Piece - Reverse Gear Syncro - 3296-
- Bearing Installer - Wheel Bearing - 3345-
- Puller - Taper Roller Bearing - VAG1582-
- Puller - Taper Roller Bearing - Adapter 6A - VAG1582/6A-
- -1- Puller - Kukko Internal - 46-56mm - 21/7-
- -2- Puller - Kukko Puller - 60-150mm Width, 200mm Length - 18/1-
- -3- Puller - Kukko Quick Action Separating Tool - 12-75mm - 17/1-
- -4- Puller - Kukko Counterstay - 22/2-

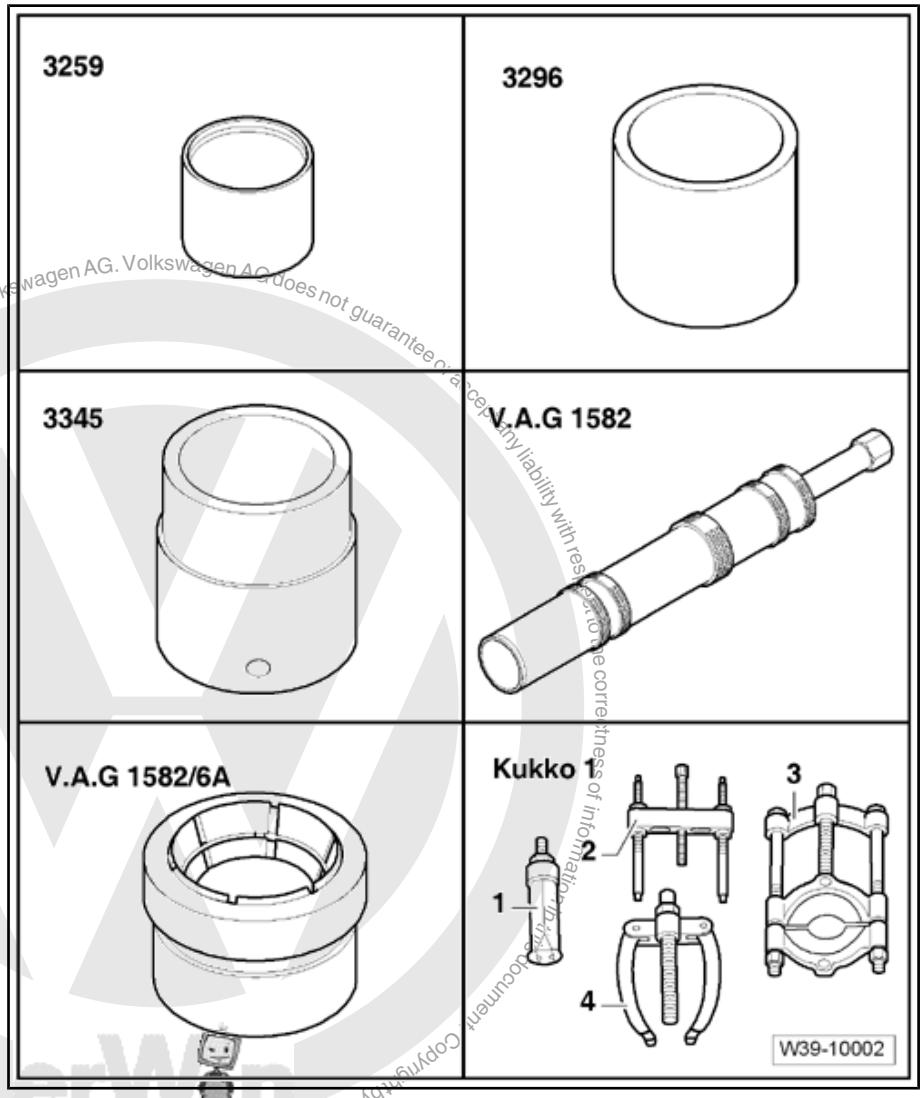

Protected by copyright. Copying for private or commercial purposes, in part or in whole, is not permitted unless authorised by Volkswagen AG. Volkswagen AG does not guarantee or accept any liability with respect to the correctness of information in this document. Copyright by Volkswagen AG.

- Press Plate - VW402-
- Press Piece - Rod - VW408A-
- Press Piece - Multiple Use - VW412-
- Press Piece - 60mm - VW415A-
- Press Piece - Multiple Use - 40-105-
- Press Piece - Multiple Use - 3005-

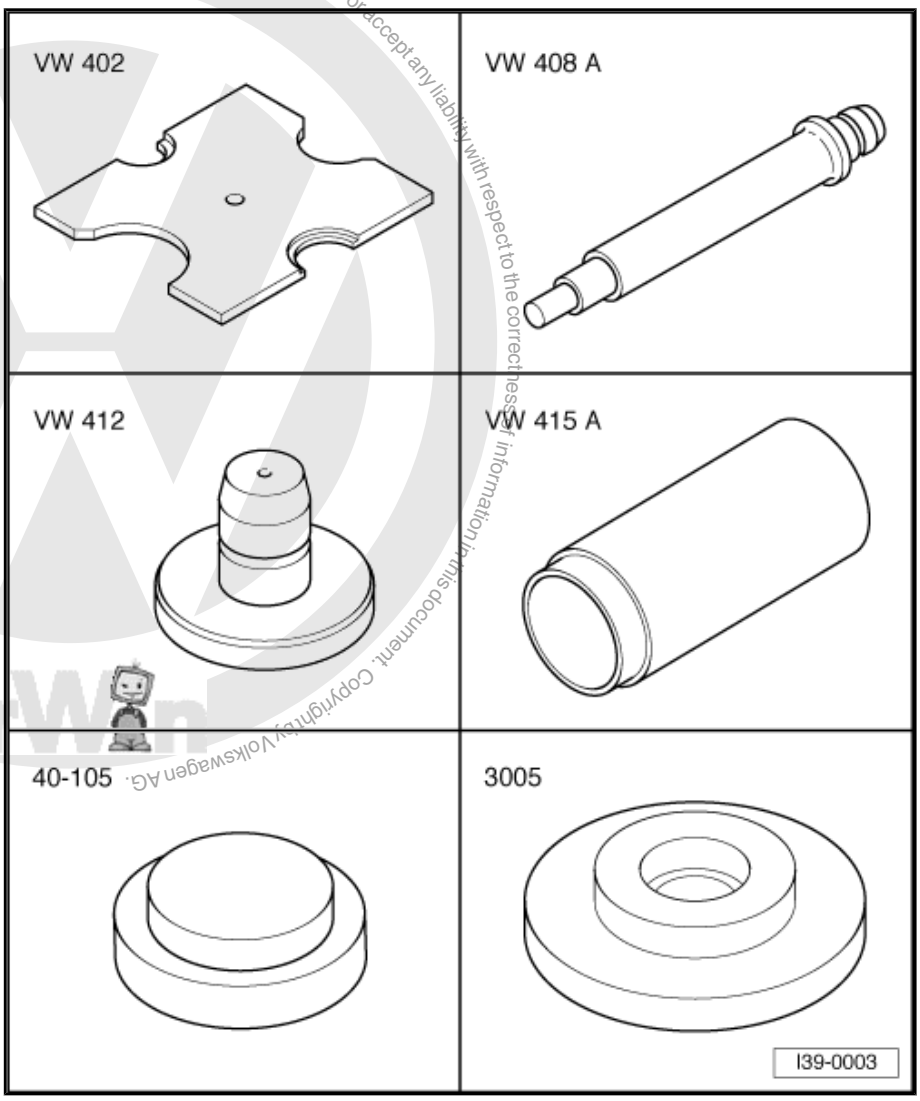

Protected by copyright. Copying for private or commercial purposes, in part or in whole, is not permitted unless authorised by Volkswagen AG. Volkswagen AG does not give any guarantee or accept any liability with respect to the correctness of information in this document. Copyright by Volkswagen AG.

- Press Piece - Multiple Use - 3005-
- Press Piece - Bushing - 3259-
- Press Piece - Reverse Gear Syncro - 3296-
- Subframe Bushing Tool Kit - 3301-
- Bearing Installer - Wheel Bearing - 3345-
- -1- Puller - Kukko Internal - 46-56mm - 21/7-
- -2- Puller - Kukko Puller - 60-150mm Width, 200mm Length - 18/1-
- -3- Puller - Kukko Quick Action Separating Tool - 12-75mm - 17/1-
- -4- Puller - Kukko Counterstay - 22/2-

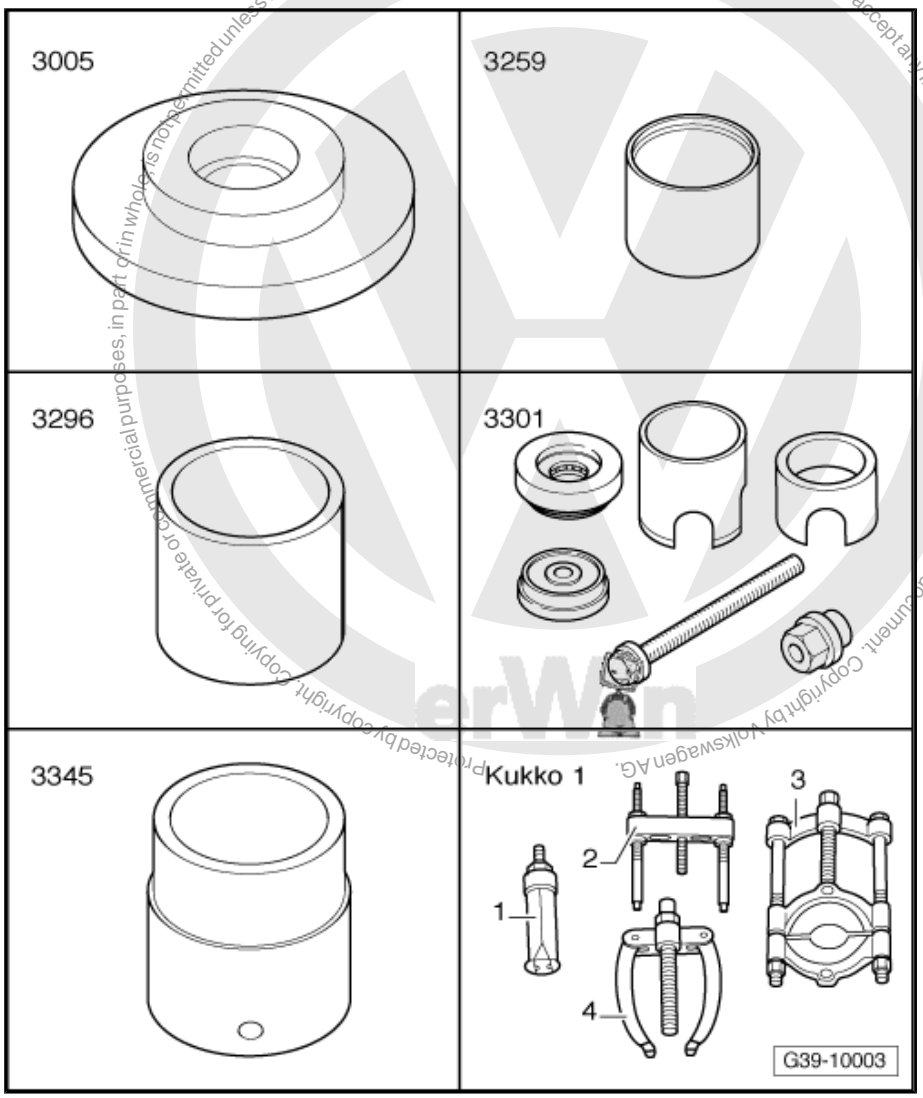

Volkswagen AG. Volkswagen AG does not guarantee or accept any liability with respect to the correctness of information in this document. Copyright by Volkswagen AG. Copyright protected by copyright. Copying for private or commercial purposes, in part or in whole, is not permitted unless authorised by Volkswagen AG.

- The seal is located on the output flange
  ⇒ Fig. ""Output Flange Seal -arrow- Removing and Installing:"" , page 385
- Press Piece - Multiple Use - VW412-
- Press Piece - Multiple Use - VW454-
- Press Piece - Multiple Use - VW455-
- Press Plate - VW401-
- Two M8 x 30 mm stud bolts or Guide Pins - M8 - T10273-
- Removal Device Pin 2 - VW460/2-

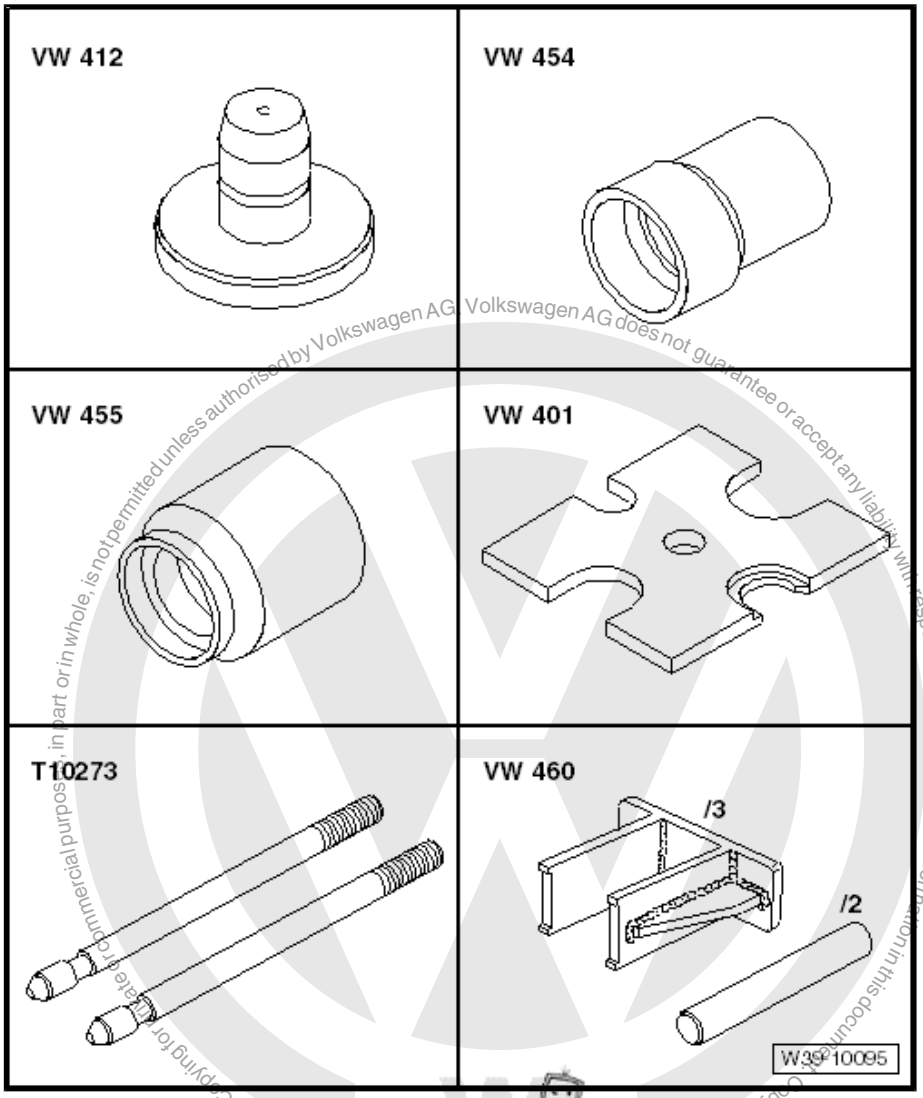

Protected by copyright. Copying for private or commercial purposes, in part or in whole, is not permitted unless authorised by Volkswagen AG. Volkswagen AG does not guarantee or accept any liability with respect to the correctness of information in this document. Copyright by Volkswagen AG.

- Measuring Set - Magnetic Plate - 50mm - VW385/17-
- Dial Gauge Holder - VW387-
- Press Plate - VW402-
- Press Piece - Rod - VW408A-
- Press Piece - Multiple Use - 3005-
- Press Piece - Bushing - 3259-

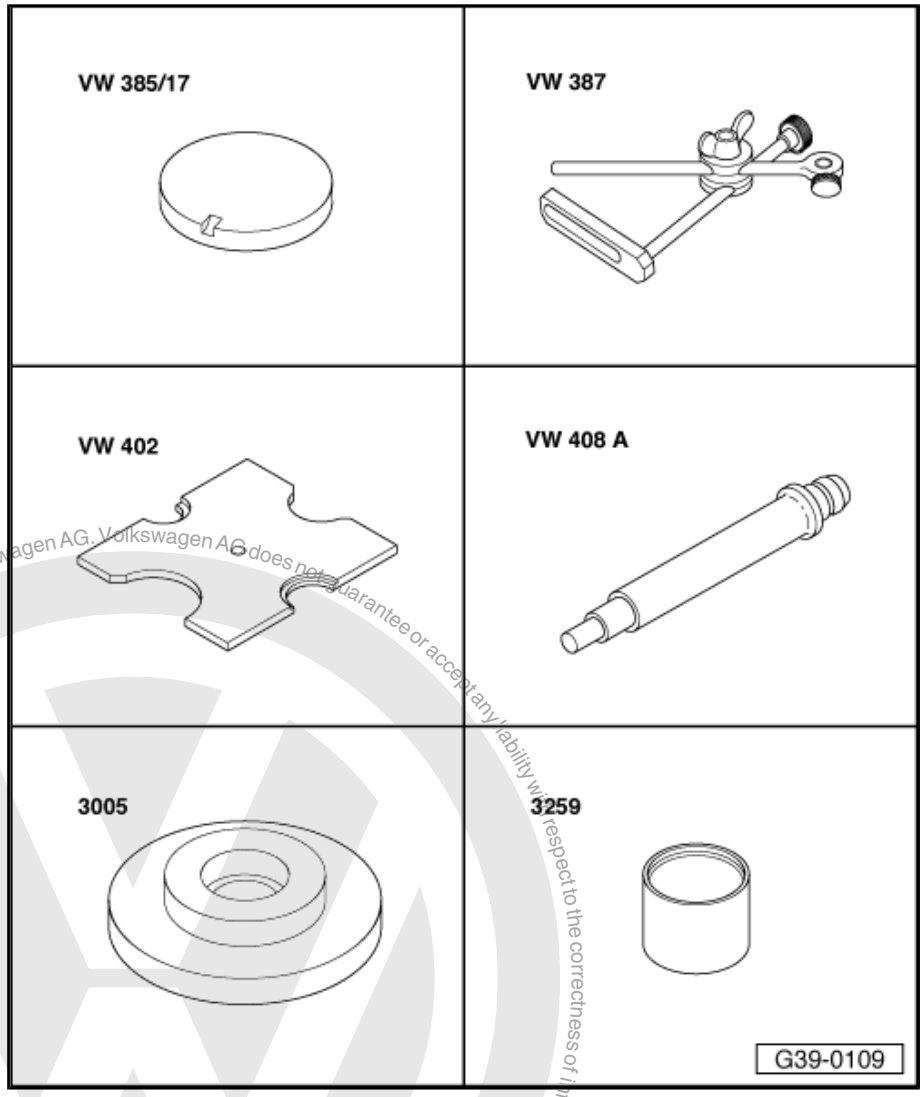

Protected by copyright. Copying for private or commercial purposes, in part or in whole, is not permitted unless authorised by Volkswagen AG. Volkswagen AG does not guarantee or accept any liability with respect to the correctness of information in this document. Copyright by Volkswagen AG.

- Slide Hammer Set - VW771-
- Slide Hammer Set - Hook - VW771/37-
- Seal Installer - Flange Shaft - 3305-
- Torque Wrench 1331 5-50Nm - VAG1331-
- Torque Wrench 1332 40-200Nm - VAG1332-
- Sealing Grease - G 052 128 A1-

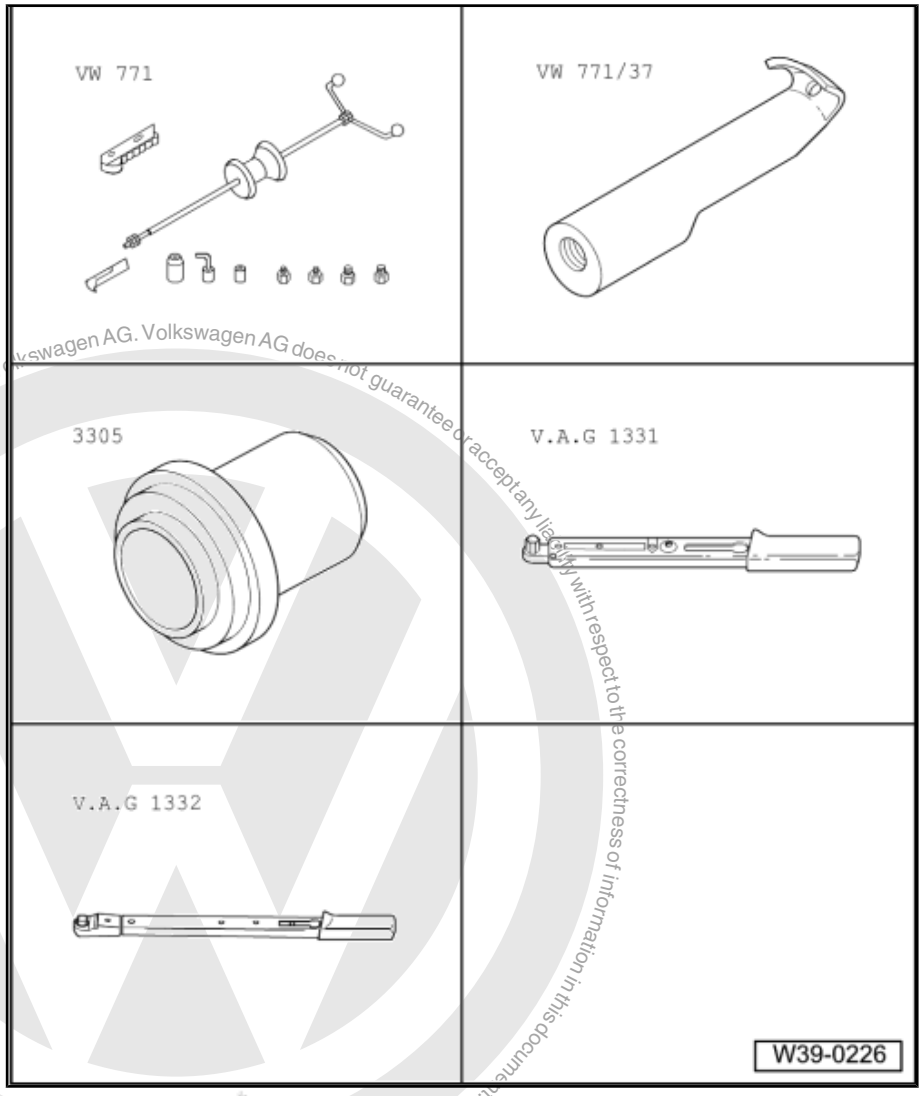

Protected by copyright. Copying for private or commercial purposes, in part or in whole, is not permitted unless authorised by Volkswagen AG. Volkswagen AG does not guarantee or accept any liability with respect to the correctness of information in this document. Copyright by Volkswagen AG.

- Holding Fixture - VW313-
- Press Piece - 42mm - VW516-
- Press Piece - Multiple Use - 40-105-
- Seal Installer - Flange Shaft - T10049-
- Gearbox Support - T10108-
- Counter Holder - T10108/1-

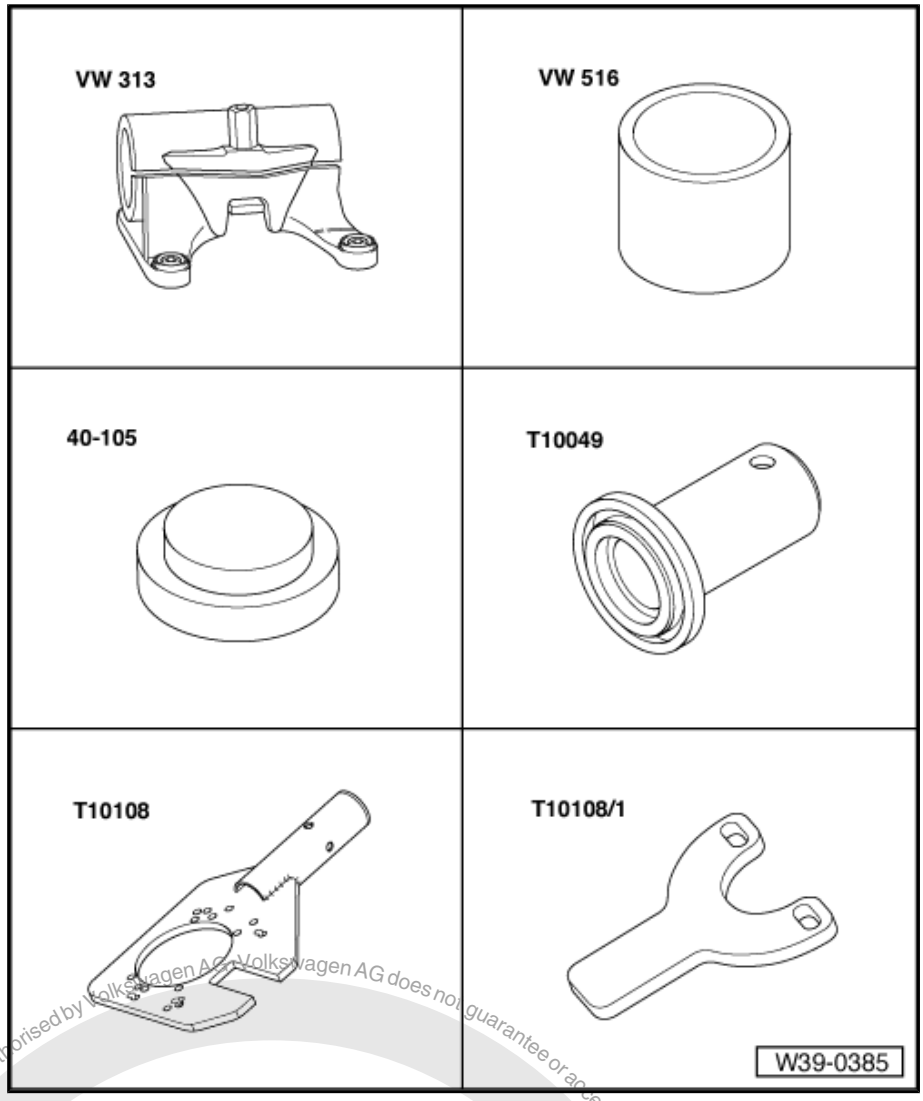

Protected by copyright. Copying for private or commercial purposes, in part or in whole, is not permitted unless authorised by Volkswagen AG. Volkswagen AG does not guarantee or accept any liability with respect to the correctness of information in this document. Copyright by Volkswagen AG.

- Puller - Taper Roller Bearing - VAG1582- with a short sleeve
- Seal is located in the pinion housing. Refer to ⇒ Fig. ""Output Flange Seal in Pinion Housing, Removing and Installing"" , page 384 . Puller - Taper Roller Bearing - Adapter 6 - VAG1582/6- or Puller - Taper Roller Bearing - Adapter 6A - VAG1582/6A-
- -1- Puller - Kukko 2-Arm - 70-180mm - 20/10-
- Seal is located on the output flange. Refer to ⇒ Fig. ""Output Flange Seal -arrow- Removing and Installing:"" , page 385 . Puller - Taper Roller Bearing - Adapter 13 - VAG1582/13-
- Continuation for All
- Torque Wrench 1601 - VAG1601-
- Three-Arm Puller - 45–2-

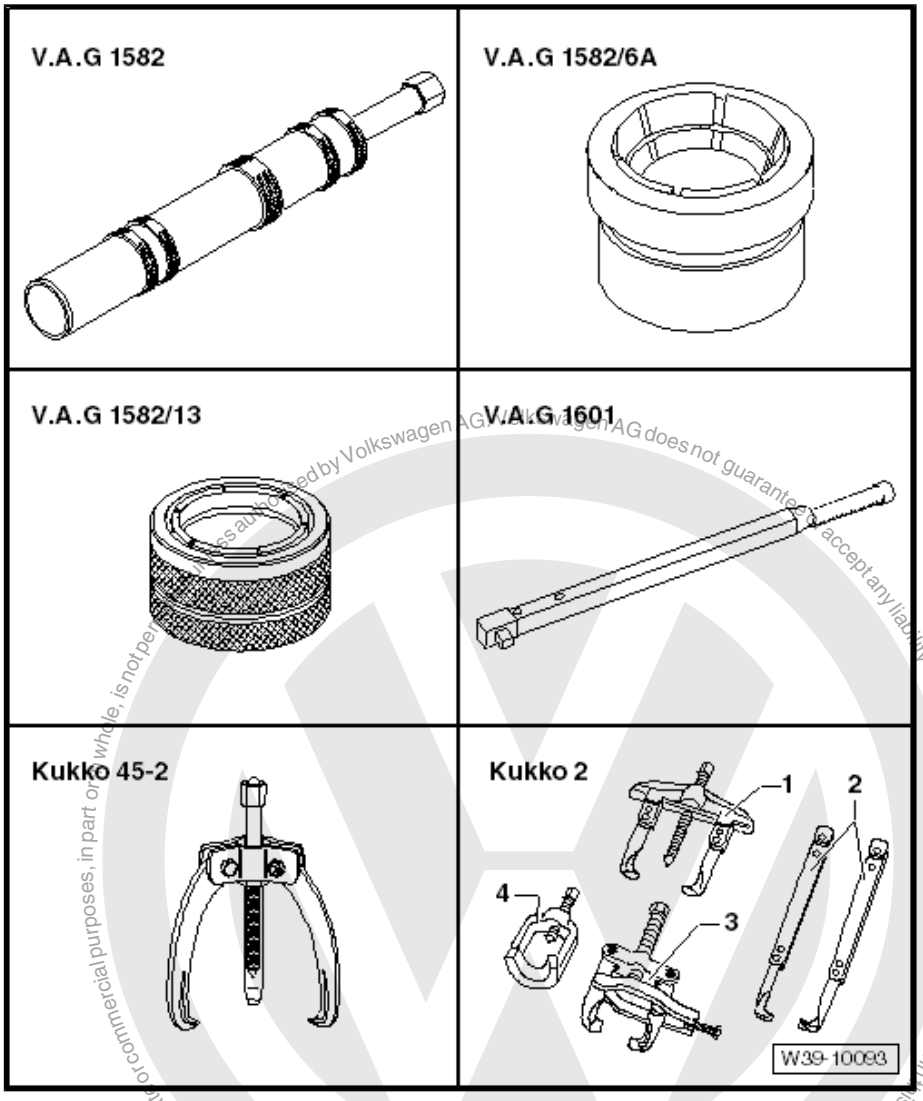

- Seal Installer - Bevel Box - T10243-

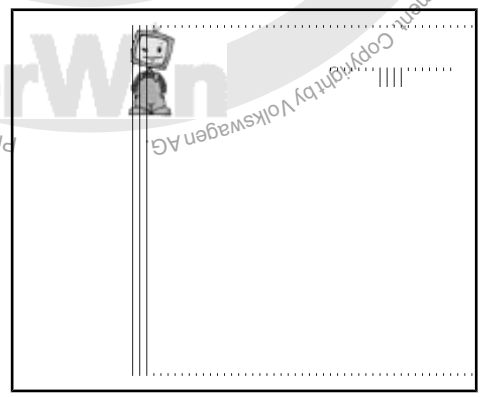

Protected by copyright. Copying for private or commercial purposes, in part or whole, is not permitted unless authorised by Volkswagen AG. Volkswagen AG does not guarantee or accept any liability with respect to the correctness of information in this document. Copyright by Volkswagen AG

- Seal Installer - Bevel Box - T10298-

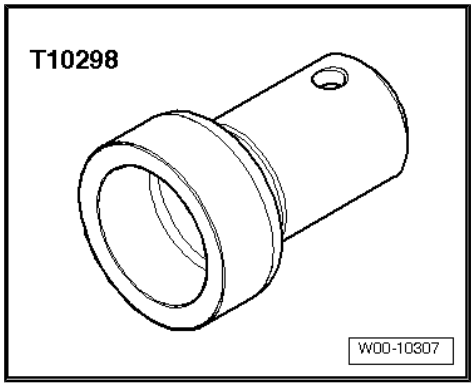

- Puller - Crankshaft/Power Steering Seal - 2 - T20143/2-

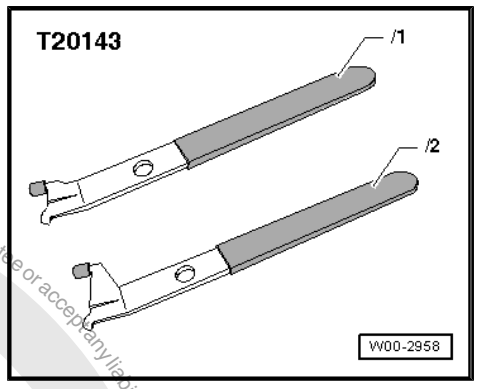

- Torque Wrench 1331 5-50Nm - VAG1331-

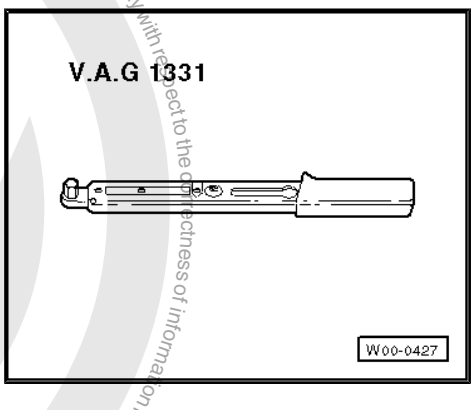

- Dial Indicator - VAS6080A-

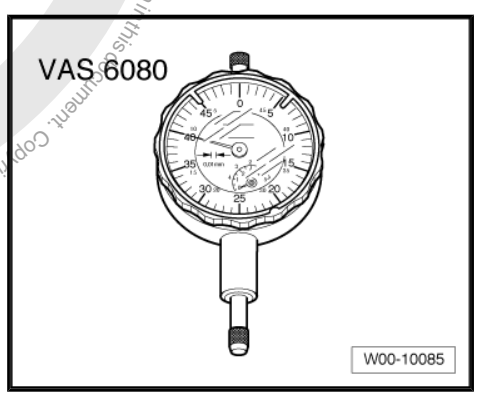

Protected by copyright. Copying for private or commercial purposes, in part or in whole, is not permitted unless authorised by Volkswagen AG. Volkswagen AG does not guarantee or accept any liability with respect to the correctness of information in this document. Copyright by Volkswagen AG.

Protected by copyright. Copying for private or commercial purposes, in part or in whole, is not permitted unless authorised by Volkswagen AG. Volkswagen AG does not guarantee or accept any liability with respect to the correctness of information in this document. Copyright by Volkswagen AG.

- Shop Crane - Drip Tray - VAS6208-

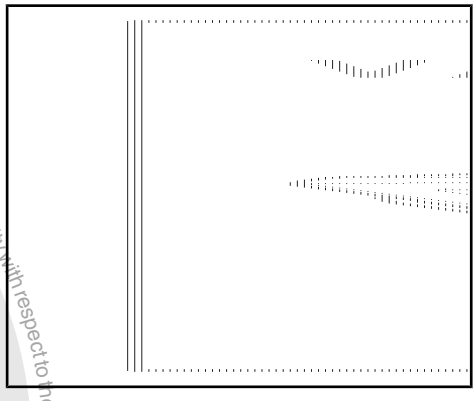

- Inductive Heater - VAS6414-

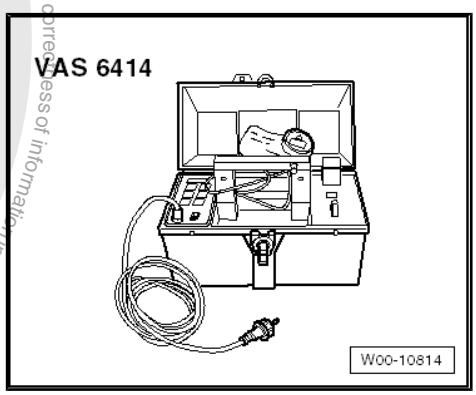

- Slide Hammer Set - VW771-

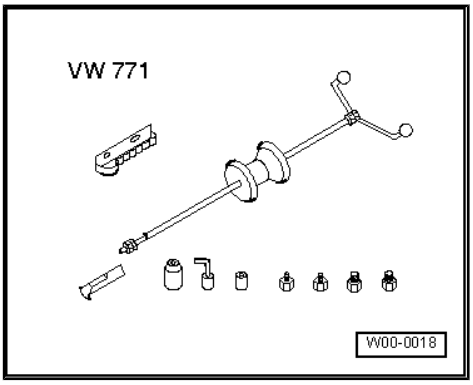

- -1- Puller - Kukko Internal - 46-56mm - 21/7-

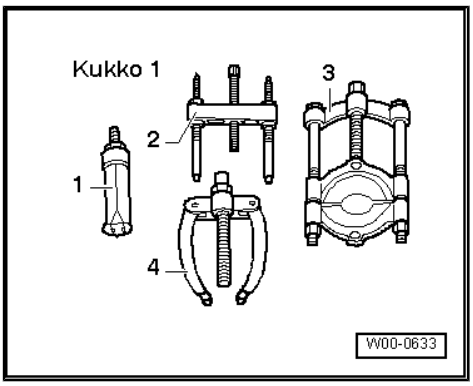

- -4- Puller - Kukko Counterstay - 22/2-

- -3- Puller - Kukko 2-Arm w/Side Clamp, 100mm Width, 100mm Length - 204/2-

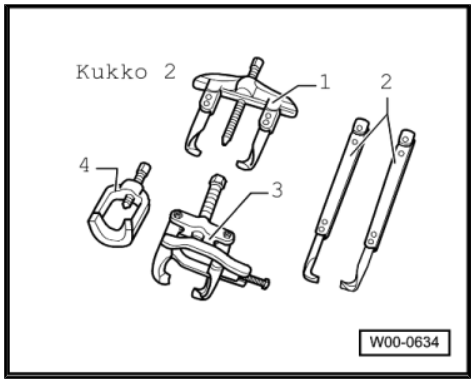

- Seal Installer - Flange Shaft - 3305-

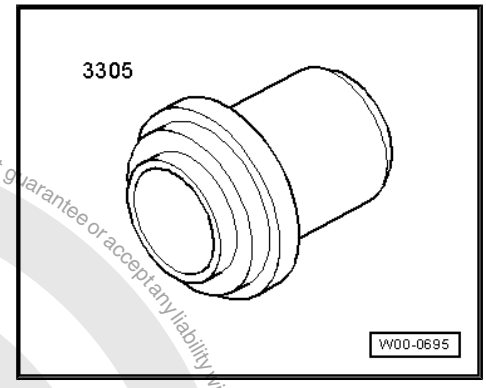

Protected by copyright. Copying for private or commercial purposes, in part or in whole, is not permitted unless authorised by Volkswagen AG. Volkswagen AG does not guarantee or accept any liability with respect to the correctness of information in this document. Copyright by Volkswagen AG.

7 Revision History

DRUCK NUMBER: MEX5R006921

Factory Edition	Edit Edition	Job Type	Feedback	Notes	Quality Checked By
05.2013	6/16/2015	Reformat and link checking		Leave 2 Special tools chapters in RG 34 for 2 different vehicles.	Jim H
	10/09/2014	Feedback	1049480		Eric P
	07/21/2014	Feedback	1029024		Eric P
	09/03/2013	Feedback	959511, 959513	Need to add CPLA and CPPA engines (both R4 2.0L TFSI) to Metta Data, no Manual Transmission (6-speed manual) book showing in ELSA. GWR	WR

Protected by copyright. Copying for private or commercial purposes, in part or in whole, is not permitted unless authorised by Volkswagen AG. Volkswagen AG does not guarantee or accept any liability with respect to the correctness of information in this document. Copyright by Volkswagen AG.

Cautions & Warnings

Please read these WARNINGS and CAUTIONS before proceeding with maintenance and repair work. You must answer that you have read and you understand these WARNINGS and CAUTIONS before you will be allowed to view this information.

- If you lack the skills, tools and equipment, or a suitable workshop for any procedure described in this manual, we suggest you leave such repairs to an authorized Volkswagen retailer or other qualified shop. We especially urge you to consult an authorized Volkswagen retailer before beginning repairs on any vehicle that may still be covered wholly or in part by any of the extensive warranties issued by Volkswagen.

- Disconnect the battery negative terminal (ground strap) whenever you work on the fuel system or the electrical system. Do not smoke or work near heaters or other fire hazards. Keep an approved fire extinguisher handy.

- Volkswagen is constantly improving its vehicles and sometimes these changes, both in parts and specifications, are made applicable to earlier models. Therefore, part numbers listed in this manual are for reference only. Always check with your authorized Volkswagen retailer parts department for the latest information.

- Any time the battery has been disconnected on an automatic transmission vehicle, it will be necessary to reestablish Transmission Control Module (TCM) basic settings using the VAG 1551 Scan Tool (ST).

- Never work under a lifted vehicle unless it is solidly supported on stands designed for the purpose. Do not support a vehicle on cinder blocks, hollow tiles or other props that may crumble under continuous load. Never work under a vehicle that is supported solely by a jack. Never work under the vehicle while the engine is running.

- For vehicles equipped with an anti-theft radio, be sure of the correct radio activation code before disconnecting the battery or removing the radio. If the wrong code is entered when the power is restored, the radio may lock up and become inoperable, even if the correct code is used in a later attempt.

- If you are going to work under a vehicle on the ground, make sure that the ground is level. Block the wheels to keep the vehicle from rolling. Disconnect the battery negative terminal (ground strap) to prevent others from starting the vehicle while you are under it.

- Do not attempt to work on your vehicle if you do not feel well. You increase the danger of injury to yourself and others if you are tired, upset or have taken medicine or any other substances that may impair you or keep you from being fully alert.

- Never run the engine unless the work area is well ventilated. Carbon monoxide (CO) kills.

- Always observe good workshop practices. Wear goggles when you operate machine tools or work with acid. Wear goggles, gloves and other protective clothing whenever the job requires working with harmful substances.

- Tie long hair behind your head. Do not wear a necktie, a scarf, loose clothing, or a necklace when you work near machine tools or running engines. If your hair, clothing, or jewelry were to get caught in the machinery, severe injury could result.

- Do not re-use any fasteners that are worn or deformed in normal use. Some fasteners are designed to be used only once and are unreliable and may fail if used a second time. This includes, but is not limited to, nuts, bolts, washers, circlips and cotter pins. Always follow the recommendations in this manual - replace these fasteners with new parts where indicated, and any other time it is deemed necessary by inspection.

next

© 2002 Volkswagen of America, Inc.
All rights reserved. Information contained in this document is based on the latest information available at the time of printing and is subject to the copyright and other intellectual property rights of Volkswagen of America, Inc., its affiliated companies and its licensors. All rights are reserved to make changes at any time without notice. No part of this document may be reproduced, stored in a retrieval system, or transmitted in any form or by any means, electronic, mechanical, photocopying, recording, or otherwise, nor may these materials be modified or reposted to other sites, without the prior expressed written permission of the publisher.
Version 1.0

Cautions & Warnings

- Illuminate the work area adequately but safely. Use a portable safety light for working inside or under the vehicle. Make sure the bulb is enclosed by a wire cage. The hot filament of an accidentally broken bulb can ignite spilled fuel or oil.

- Friction materials such as brake pads and clutch discs may contain asbestos fibers. Do not create dust by grinding, sanding, or by cleaning with compressed air. Avoid breathing asbestos fibers and asbestos dust. Breathing asbestos can cause serious diseases such as asbestosis or cancer, and may result in death.

- Finger rings should be removed so that they cannot cause electrical shorts, get caught in running machinery, or be crushed by heavy parts.

- Before starting a job, make certain that you have all the necessary tools and parts on hand. Read all the instructions thoroughly; do not attempt shortcuts. Use tools that are appropriate to the work and use only replacement parts meeting Volkswagen specifications. Makeshift tools, parts and procedures will not make good repairs.

- Catch draining fuel, oil or brake fluid in suitable containers. Do not use empty food or beverage containers that might mislead someone into drinking from them. Store flammable fluids away from fire hazards. Wipe up spills at once, but do not store the oily rags, which can ignite and burn spontaneously.

- Use pneumatic and electric tools only to loosen threaded parts and fasteners. Never use these tools to tighten fasteners, especially on light alloy parts. Always use a torque wrench to tighten fasteners to the tightening torque listed.

- Keep sparks, lighted matches, and open flame away from the top of the battery. If escaping hydrogen gas is ignited, it will ignite gas trapped in the cells and cause the battery to explode.

- Be mindful of the environment and ecology. Before you drain the crankcase, find out the proper way to dispose of the oil. Do not pour oil onto the ground, down a drain, or into a stream, pond, or lake. Consult local ordinances that govern the disposal of wastes.

- The air-conditioning (A/C) system is filled with a chemical refrigerant that is hazardous. The A/C system should be serviced only by trained automotive service technicians using approved refrigerant recovery/recycling equipment, trained in related safety precautions, and familiar with regulations governing the discharging and disposal of automotive chemical refrigerants.

- Before doing any electrical welding on vehicles equipped with anti-lock brakes (ABS), disconnect the battery negative terminal (ground strap) and the ABS control module connector.

- Do not expose any part of the A/C system to high temperatures such as open flame. Excessive heat will increase system pressure and may cause the system to burst.

- When boost-charging the battery, first remove the fuses for the Engine Control Module (ECM), the Transmission Control Module (TCM), the ABS control module, and the trip computer. In cases where one or more of these components is not separately fused, disconnect the control module connector(s).

- Some of the vehicles covered by this manual are equipped with a supplemental restraint system (SRS), that automatically deploys an airbag in the event of a frontal impact. The airbag is operated by an explosive device. Handled improperly or without adequate safeguards, it can be accidentally activated and cause serious personal injury. To guard against personal injury or airbag system failure, only trained Volkswagen Service technicians should test, disassemble or service the airbag system.

back next

© 2002 Volkswagen of America, Inc.
All rights reserved. Information contained in this document is based on the latest information available at the time of printing and is subject to the copyright and other intellectual property rights of Volkswagen of America, Inc., its affiliated companies and its licensors. All rights are reserved to make changes at any time without notice. No part of this document may be reproduced, stored in a retrieval system, or transmitted in any form or by any means, electronic, mechanical, photocopying, recording, or otherwise, nor may these materials be modified or reposted to other sites, without the prior expressed written permission of the publisher.
Version 1.0

Cautions & Warnings

- Do not quick-charge the battery (for boost starting) for longer than one minute, and do not exceed 16.5 volts at the battery with the boosting cables attached. Wait at least one minute before boosting the battery a second time.

- Never use a test light to conduct electrical tests of the airbag system. The system must only be tested by trained Volkswagen Service technicians using the VAG 1551 Scan Tool (ST) or an approved equivalent. The airbag unit must never be electrically tested while it is not installed in the vehicle.

- Some aerosol tire inflators are highly flammable. Be extremely cautious when repairing a tire that may have been inflated using an aerosol tire inflator. Keep sparks, open flame or other sources of ignition away from the tire repair area. Inflate and deflate the tire at least four times before breaking the bead from the rim. Completely remove the tire from the rim before attempting any repair.

- When driving or riding in an airbag-equipped vehicle, never hold test equipment in your hands or lap while the vehicle is in motion. Objects between you and the airbag can increase the risk of injury in an accident.

I have read and I understand these Cautions and Warnings.

back OK

Protected by copyright. Copying for private or commercial purposes, in whole or in part, is not permitted unless authorised by Volkswagen AG. Volkswagen AG does not guarantee or accept any liability with respect to the correctness of information in this document. Copyright by Volkswagen AG.

© 2002 Volkswagen of America, Inc.
All rights reserved. Information contained in this document is based on the latest information available at the time of printing and is subject to the copyright and other intellectual property rights of Volkswagen of America, Inc., its affiliated companies and its licensors. All rights are reserved to make changes at any time without notice. No part of this document may be reproduced, stored in a retrieval system, or transmitted in any form or by any means, electronic, mechanical, photocopying, recording, or otherwise, nor may these materials be modified or reposted to other sites, without the prior expressed written permission of the publisher.
Version 1.0